Protection Issues Related to Pumped Storage Hydro (PSH) Units

Members of the "Working Group on Protective Relaying for Pumped Storage Hydro Units";
J. Uchiyama (Chairman), D. Finney (Vice Chairman), C. Mozina, M. Basler, H. Ashrafi,
W. English, R. Hamilton, W. Hartmann, R. Pettigrew, Z. Bukhala, M. Reichard

***Abstract*-Pumped storage hydroelectric (PSH) units provide protection complexity not encountered in conventional generating plants. As PSH units operate in both generating and pumping modes, attention must be given to the frequency and phase rotation presented to the relaying. In some PSH applications, additional relays and switching of VT and CT connections are applied to cope with these challenges. This paper serves as an update to the original 1975 paper based on survey results when the majority of relays were of the discrete variety. Discrete relays did not have frequency tracking characteristics or provide operation mode based phase rotation selection, however newer technology can adapt to these PSH operational challenges. With the advent of new relaying technology, including static and microprocessor designs, an updated PSH Protection Practices survey was conducted in 2012 to quantify recent relaying practice and protection application trends on PSH units.**

***Index Terms*-GEN Mode, Phase Rotation, PSH, MTR Mode, Starting Method, Survey, Switching VTs/CTs**

I. INTRODUCTIO N

This document contains the results of the 2012 Survey, and reviews the various protective devices that may be employed in the protection of a PSH unit that include the generator/motor, phase reversing switches, circuit breakers, main transformer and the connections between these components. It does not address protective devices associated with auxiliary equipment such as station service transformers, starting motors, static converter starting devices, etc.

The purpose of a PSH installation is to store energy in an elevated water reservoir during off peak periods for generating power during peak demand periods. Water is pumped from a lower reservoir to an upper reservoir where the potential energy from the upper reservoir's elevation head is stored to be later used to generate electricity. Most PSH units are designed for reversible operation, rotating in one direction as a turbine/generator and in the other as a motor/pump. Reversal of direction is accomplished by reversing the phase sequence of the main electrical leads. A PSH unit may be operated as a synchronous condenser in either direction of rotation for power factor correction, or in an unloaded spinning mode to facilitate quick loading (reserve). A PSH generator(s) is characterized by its quick start-up, short response time~~s~~ and high efficiency.

The requirement for reverse rotation introduces major differences in protection between PSH and conventional hydroelectric units. One of the major electrical problems encountered is providing the proper current transformer (CT) connections for correct operation of the associated protective relays when the generator/motor phases are reversed. When a reversing switch is used for generator/motor phase reversal, auxiliary contacts of that switch may be necessary to shift the connections of the associated CT secondaries.

Phase reversal may be accomplished through the use of separate circuit breakers for motor and generator modes, eliminating the necessity for switching CT connections, but is more costly and requires separate CTs for motor and for generator modes. A PSH unit employing a tandem combination of separate pump and turbine can operate as a generator or a pump without changing its direction of rotation. For such a unit, CTs may be applied in the conventional manner.

A PSH installation generally utilizes modified Francis type turbines requiring the elevation of the turbine runner be below the tail water level. Severe starting requirements would be imposed if an attempt were made to start and accelerate a unit in the pumping mode with the turbine runner submerged. It is therefore necessary to inject compressed air to blow-down the water to below the turbine runner level before attempting to start the unit. In the dewatered condition, load at full speed due to friction and windage is about 2% of full load as compared with 30 to 40% with the turbine runner immersed.

II. METHODS OF STARTING IN THE PUMPING MODE

The following are the common methods employed in starting pumped storage units in the pumping mode. Common to each method is the need to perform the necessary phase switching for motor operation and the depression of the water in the draft tube prior to starting.

A. Across the Line Start

The pumped storage unit is started with full voltage from the main transformer by closing the unit circuit breaker. The

This document was submitted to IEEE for review on January 20, 2015.
This work was supported in part by Rotating Machinery Protection Subcommittee of The IEEE Power System Relaying Committee.
The work was performed by the Working Group J6, Protective Relaying for Pumped Storage Hydro Units.

unit comes up to near full speed as an induction motor, at which time excitation is applied to bring the unit into synchronous operation. This method has the advantage of being the simplest, quickest and most economical, requiring only the continuously connected amortisseur windings (aka damper windings). It is limited to the smaller size units, since large units cannot be built with sufficient amortisseur winding capacity to dissipate the heat produced during startup. It also has a major disadvantage in that it causes extreme voltage dips on the transmission system.

B. Reduced Voltage Start

The unit is started at reduced voltage, either from a tap on the main transformer or through a series reactor in the start circuit, by closing a "start" circuit breaker. When the unit reaches full speed as an induction motor, excitation is applied to bring it into synchronous operation. Once operating as a synchronous motor, the starting breaker is opened and the running breaker is closed. Reducing the starting voltage reduces the voltage dip at start, but the starting time is increased in the process. A second voltage dip occurs when the transfer ~~I~~ is made from the starting to the running breakers. Reduced voltage start is also limited to the smaller size units due to the same amortisseur winding capability limitation as described under "Across the Line Start."

C. Synchronous Start (aka Back-to-Back Start)

The unit is started as a synchronous motor by another unit operating as a generator, with both units initially at rest. The necessary switching is performed to disconnect the machines from the transmission system and to connect the generating unit to the pumping unit. Static excitation or a separate excitation system is required to provide full field at zero speed. The fields of both units are energized and the generator turbine gates are opened to a predetermined position. Both the generator and the motor will accelerate together, and at 95% speed the generating machine is placed on governor control. The units are then synchronized with the transmission system, at which time the generating unit is shut down to be ready for starting of another pumping unit. The last unit which acts as generator must be provided with different starting method if all units are used as pumps.

D. Reduced Frequency or Semi-Synchronous Start

This method is similar to the synchronous start except the pumping unit is started as an induction motor. The generator turbine gates are opened to a predetermined position. When the speed of the generator reaches approximately 50% to 80%, a starting breaker is closed; tying the stators of the generating unit and pumping unit together, and the generating unit field breaker is closed. Upon application of the generating unit field, the generating unit will decelerate while the pumping unit accelerates. When the pumping unit reaches the approximate speed of generating unit, the pumping unit field is applied to bring it into synchronism with the generating unit. The turbine gates are then opened at a predetermined rate, the generating unit is placed on governor control, and the synchronized units are brought up to rated speed and synchronized to the system through a running breaker. The generating unit is then shut down to be ready for starting another pumping unit. As with synchronous start, at least one machine must be provided with an alternate method of start if all units are to be used as pumps.

E. Wound Rotor Induction Motor Start

In this method, an induction motor is coupled to the generator/motor shaft. The unit is brought up to speed by the induction motor whose starting control automatically maintains constant torque until near rated speed when speed matching and synchronizing relays automatically synchronize the machine with the transmission system. This is the most flexible starting method, but it is usually slower than alternate methods.

F. Reduced Winding Start

The unit is started as an induction motor by application of full voltage to only part of the parallel stator circuits, reducing the starting current and voltage dip. Machine impedance during starting is inversely proportional to, and starting torque directly proportional to, the amount of winding used. This method has the disadvantage of unbalanced heating and complex stator winding designs.

G. Static Converter Start (aka Static Frequency Converter)

This method is similar in principle to synchronous starting from another unit, as already described. The unit is started as a dc converter-fed motor. The converter is a rectifier/inverter set which takes power from an auxiliary source, and provides a variable frequency output to the motor. Rated field current is applied at standstill from static or separate excitation equipment. At low speeds, the inverter frequency is controlled by devices which indicate shaft position. At higher speeds the inverter frequency follows machine speed and the machine accelerates toward synchronism under control. One converter may be used in a multi-unit plant, and the required starting bus and switches may make synchronous starting from another unit a viable backup staring method.

H. Variable Speed Drive of Pumped Storage Units (aka Variable Frequency Drive)

This method allows smooth start up and adjusting the motor running speed according to actual operation conditions such as change of water head, achieving energy savings. This operation method improves the efficiency of the pump as speed is proportional to the efficiency; pressure is proportional to the square of speed, and horsepower is proportional to the cube of speed. This means if an application only needs 80 percent water flow, the pump will run at 80 percent of rated speed and only requires 50 percent of rated power. In other words, reducing speed by 20 percent requires only 50 percent of the power.

III. PROTECTION REQUIREMENTS

Effective protection of PSH units requires consideration of both the generating and pumping modes of operation. The protection requirements of generators and motors are well

written in three IEEE guides C37.96, "IEEE Guide for AC Motor Protection," C37.101, "IEEE Guide for Generator Ground Protection," and C37.102, "IEEE Guide for AC Generator Protection." However, the guides do not provide details of the important considerations such as why some elements (relays) are needed to be blocked during starting up period (starting methods). Some starting methods, such as (1) Synchronous Start (aka Back-to-Back Start), (2) Reduced Frequency or Semi-Synchronous Start, and (3) Static Converter Start (aka Static Frequency Converter), energize a unit at the extremely low frequency during the starting period. Due technical -limitations, some elements (relays) are not properly responding underfrequency condition. Therefore, those elements are blocked for avoiding a nuisance operation(s).

A major consideration for protection is the impact of the phase rotation. In the1975 an early version of this Survey addressed phase rotation by switching of CTs and VTs. This is still an option today; however, most protection engineers would prefer not to switch CTs. A second option is to use two relays - one for pump mode and a second for generator mode. The downside of this approach is the number of relays doubles. A third option is to use a relay that can adapt to the reversing switch. For example some relays allow, the phase rotation setting to change from ABC to ACB based on the status of a relay input. Similarly, some relays can also dynamically reconfigure the current inputs which feed the various protection elements.

This section describes the protective devices associated with a pumped storage unit. An intensive review of all of the operating difficulties and faults possible is beyond the scope of this document. Figures 1, 2, 3, 4 5 and 6 are intended to primarily show, the necessary switching required to operate in either the generating or pumping mode, and the effect the switching arrangement has on the differential relay connections. For completeness, all of the relays and devices covered in the text are also shown on Figures 1 & 2 except auxiliary time delay relays required for coordination. Figure 2 is a typical arrangement of digital relays for satisfying the redundancy requirements.

Most of the protection requirements for a pumped storage unit apply equally to conventional hydro or thermal units. The exceptions are those relays required for protection when starting as a motor or running in the pumping mode. Where a device is not unique to pumped storage units, the usual application rules apply, and this fact is expressly noted in the text covering each device.

The information contained in this document, is to a large extent, a reflection of present practice.

IV. PROTECTIVE RELAYS

The following protective relays/elements are a reflection of present industrial practice commonly applied for a PSH unit protection.

- Device 11 – Multifunctional Relay/Element -This relay performs three or more comparatively important functions that could be designated by combining several device function numbers in accordance with IEEE C37.2-2008 (IEEE Standard for Electrical Power System Device Function Numbers, Acronyms, and Control Designations). For an example, 11T1 is used to denote a multi-function device (device 11) for T1 indicating transformer protection (device 87) including overcurrent elements (device 50/51) as set No. 1. Likewise, 11T2 indicates the set No.2. 11GM1 is a multifunction device for a generator and motor protective relay set No. 1. Similarly, 11GM2 is the set 2. (Figure 2) In some digital relays functions may be enable/disabled using a digital input which reflects the mode of operation (generator/pump). This input may also be used to implement a setting group change. This allows functions that respond to sequence quantities to operate correctly without the need to externally switch the CTs or VTs.

- Device 21 – Distance Backup Relay/Element - This relay has its principal direction of reach into the transmission system. In typical generator protection application, it provides generator protection for faults on the system that are not cleared by the normal (primary) system protection. The relay should be set so that it will not operate on emergency generator overloads at the maximum lagging power factor and still provide the desired backup reach into the system. Tripping must be delayed to coordinate selectively with other (primary) relay systems. These coordination requirements should reference to NERC PRC-025-1 (Generator Relay Loadability) provides directions for setting of this element. In digital relays having multiple zones, a second zone may be used as backup protection for the transformer for details. This application is not unique to pumped storage protection. In addition to proper phase relationships between relay currents and voltages, some distance relays make use of sequence quantities and therefore require a correct phase sequence of the relay inputs. For proper operation of this type of distance relay in a pumped storage application, with both input sources from the machine side of the reversing switch, both current and potential connections to the relay must be reversed by auxiliary contacts of the reversing switch. (Figure 1). Figure 5 (for an example of discrete relays) shows an application unique to pumped storage protection where protection philosophy does not permit switching current transformer leads. In addition to the distance backup relay (device 21m) described above, two additional distance relays (devices 21b) are used for the blind zone protection. To avoid current transformer switching without installing additional current transformers, the differential zones for the transformer (device 87T) and generator/motor (device 87G/87M) do not include the reversing switch. A distance relay at the transformer reaching through the transformer provides redundant

protection for the reversing switch and associated bus as well as additional protection for the machine and transformer. Tripping is instantaneous because of the limited zone of protection, and is supervised by an instantaneous overcurrent fault detector (device 50). Auxiliary contacts of the phase reversing switches are used in the voltage transformer (VT) circuit of the relay located at the generator to maintain proper phase relationship between currents and voltages when the rotation of the machine is reversed. The distance relay used operates properly with 1, 2, 3 (A, B, C) or 3, 2, 1 (C, B, A) phase rotation.

- Device 24 – Volts per Hertz (aka Over-Excitation) Relay/Element - The device operates when the ratio of voltage to frequency is above a preset value or is above a different preset value to protect over-fluxing lamination of transformer cores and generator stator cores. The relay may have any combination of instantaneous or time-delayed characteristics. A volts-per-hertz relay was developed for the protection of unit connected transformers after a number of failures occurred during warm up of thermal generating units when full excitation was inadvertently applied with the machine running at reduced speed. With a circuit breaker between the transformer and the generator/motor, the probability of overexciting the transformer is rather remote. However, this protection is a standard function of a microprocessor relay and should be applied if there is any chance of overexciting the transformer at reduced frequency.

- Device 26 – Locked Rotor Protection Relay/element - When a machine is started as an induction motor, a large inrush current as high as 600% of the rated current will circulate in the continuous amortisseur winding until the machine comes up to speed. Although the amortisseur winding capability is usually the thermal limiting element on start-up, there is no convenient way to measure this current directly. Protection can be provided by a single-phase inverse overcurrent relay (device 51) with a long-time characteristic that measures stator current. The relay is set above load current but lower than locked rotor current and time delayed to override the normal starting transient. Another method to provide locked rotor protection or failure to come up to speed because of excessive gate leakage is to provide a timer that is started when the starting circuit breaker is closed and stopped by a speed switch when the desired speed is reached. Recently, a digital motor protective relay(s) designed including a thermal model type locked rotor protection. The overcurrent relay would also provide running protection should the machine lose synchronism and operate as an induction motor when pumping. See Device 51DP.

- Device 27TN (or 27N3) – Third harmonic undervoltage Relay/Element - In general, most units will generate 1% or more 3rd harmonic voltage. If the reduced or no 3rd harmonic voltage at the neutral is detected, it determines as a short circuit between a stator winding(s) and ground. 27TN (or 27N3) 3rd harmonic under-voltage relay/element detects this condition. 100% ground fault detection is achieved by the combination (overlapping) of a fundamental frequency overvoltage relay/element (59N1 covers 85~95% of the stator windings measured from unit terminal) and a 3rd harmonic undervoltage relay/element (27TN or 27N3 covers 10~15% from the neutral terminal). This element/relay requires actual measurements during the normal operation of the machine for determination of the setting.

- Device 32 – Directional Power Relay/Element - A device that operates on a predetermined value of power flow in a given direction, such as reverse power flow resulting from the motoring of a generator upon loss of its prime mover.

- Device 37 – Underpower Relay/Element - A power relay is used to detect loss of incoming power while pumping. On loss of power, the headwater pressure will cause deceleration in speed until the machine stops and reverses its direction of rotation unless the wicket gates (or valve) are closed promptly. Allowing the unit to go through a “turnaround” may cause severe hydraulic vibration and possible thrust bearing damage when going through zero speed. The under-power relay contacts are supervised by a gate position switch that is open at zero gate opening. This gate position switch allows the machine to be started in the pumping mode. After the unit is synchronized to the transmission system, the blow down air is released and water comes up on the runner. The unit pumping against closed gates takes power equal to 30 to 40 percent of full load. This power causes the under-power relay to open its contacts. When the gates are opened to allow pumping, the gate position switch closes and arms the under-power relay to initiate gate closure on loss of incoming power. The relay is usually set to operate at 20 percent of the power required to pump against closed gates. An underfrequency relay (device 81U), armed only when the unit is operating in pumping mode and synchronized to the system, may also be used to provide this protection. See Device 81M.

- Device 40 – Loss of Excitation Relay/Element -Loss of excitation protection has become standard generator protection and is not unique to a pumped storage unit. It may be a dc undercurrent relay in the field circuit or an impedance relay with its principal direction of reach toward the generator. Impedance relays such as devices 21 and 40 should be applied with care to a pumped storage unit. Proper phase relationship between currents and voltages to the relay must be maintained when the unit phase (A, B, C) or (C, B, A) is reversed. Microprocessor relays may use positive sequence

impedance. If so, then care must be taken to ensure that the relay measures positive sequence voltage and positive current in both generator and pump modes. If the unit is started as an induction motor the loss of excitation relay should be armed only after the field breaker is closed and the unit is in synchronous operation. If synchronous start is used, the relay should be armed after the unit is synchronized to the transmission system since the relay can operate incorrectly at reduced frequency and voltage. It should be noted that if the machine is operated as a synchronous condenser (which is under-excited and Var flow into the machine similar to LOF condition), a voltage relay may have to be used to supervise a distance type loss of excitation relay. This voltage supervision prevents undesirable relay operation when the machine is operated with the under-excitation.

- Device 46 – Phase Balance or Negative-Phase-Sequence Relay/Element - These relays protect the unit from overheating due to unbalanced phase currents. The unbalance could be caused by an open phase external to the unit that may not be detected by other system protection. These relays will also operate for system faults and must be time coordinated with other system protection. This application is not unique to pumped storage protection. The Phase balance electromechanical (EM) relay operates on the percentage of phase unbalance and does not require a definite phase sequence. Conversely, microprocessor relays are designed to calculate negative phase sequence current and operate during unsymmetrical faults. The negative-phase-sequence relay has a time-current characteristic that approximates the I_2^2t machine capability. It requires a definite phase sequence of its current supply. If the current source is from the machine side of the reversing switch the current transformer secondaries must be reversed as shown in Figure 1. To avoid switching current transformer leads, some companies have installed two relays, one connected and armed for operation in the generating mode and the other for the pumping mode. If the supply is from the system side of the reversing switch, the relay is supplied with the proper phase sequence in either mode of operation.

- Device 47 – Phase Sequence Voltage Relay/Element - This is a three-phase relay that operates from a voltage source on the unit side of the circuit breaker to verify the presence of voltage and the correct rotation of the machine. This relay is not used in a direct manner for unit protection, but indirectly in the start-check control scheme. Two relays are sometimes employed, one to verify correct rotation in the generating mode and the other for the pumping mode.

- Device 49 – Generator/Motor Thermal Relay/Element - This relay is connected to a resistance temperature detector (RTD) imbedded in the generator/motor stator winding which acts as one leg of a Wheatstone bridge. Modern technology allows the transmission of these temperature signals to a long distance without significant attenuation of signal. The relay is calibrated in degrees Centigrade or Fahrenheit. When the winding temperature at the detector reaches or exceeds the relay setting, the relay contacts will close to either alarm or trip.

- Device 50S – Subsynchronous Overcurrent Relay/Element - This is usually a EM plunger type discrete overcurrent relay used to supplement the differential protection during startup when the machine is operating at Subsynchronous speed. Differential relays (device 87M) lose sensitivity at reduced frequency. The sensitivity of a plunger type relay is essentially independent of frequency down to about 10 to 15 Hz. A further decrease in frequency results in a decrease in sensitivity approaching the dc pickup of the relay. At frequencies below 10 Hz and current near relay pickup, the relay tends to follow the current wave and chatter. The use of a plunger type relay to supplement differential relays during startup is not unique to pumped storage unit protection. The trip circuit is disarmed when the machine is synchronized to the system. If this function is implemented using a microprocessor relay, then the operation should be checked to ensure that the element remains accurate at low frequencies. In some microprocessor relays the differential elements remain accurate over a wide frequency range in which case this function is not required. In the synchronous start method, frequency will increase from zero to 60 Hz as the two machines come up to speed. The plunger type overcurrent relay must be set above the starting current (150 to 200%) to prevent misoperation due to chatter at low frequencies.

- Note: Devices 50a and 50b as shown in Figure 5 are fault detecting relays used with distance relays (Device 21).

- Device 51/51V – Overcurrent Backup Relay/Element - These relays provide backup protection for the unit for system faults that would normally be cleared by some other primary relays. They must be time coordinated to operate selectively with relay systems for which they provide backup. Because of the relative small difference between maximum load current and fault current after a short time delay (device 51), it is difficult to obtain the desired backup with overcurrent relays. If a more sensitive setting is required to obtain the desired backup, either a voltage controlled or a voltage restrained overcurrent relay (Device 51V) may be used. Device 51V is only recommended when the interconnected system relays are also over current relays. EEE C37.102 and NERC technical reference documents (Power Plant and Transmission System Protection Coordination) recommend using device 21 on the generator for better coordination when the

interconnected system relays are also distance relays. If the pumped storage unit is started in the pumping mode by methods other than wound rotor induction motor or static frequency converter (SFC) start, overcurrent relays must be set above motor staring current.

- Device 51DP – Damper Pullout Overcurrent Relay/Element - Units started as induction motors require an amortisseur (damper) winding of sufficient capacity to dissipate heat produced during startup. If the machine should pull out of synchronism, this winding will carry a large current. To protect the winding from damage, a single-phase long-time overcurrent relay of the type used for motor protection is applied. This relay is shown on figure 1. This relay also provides locked rotor protection. See Device 26.

- Device 51 N – Generator/Motor Neutral Overcurrent Relay/Element - As an alternate or backup to the overvoltage relay (device 59N), an overcurrent relay (device 51N) supplied from a current transformer in series with the grounding resistor or in the generator neutral may be used. This relay must be set above zero sequence harmonics and the unbalance currents that flow in the neutral during normal operation. This element/relay requires actual measurements during the normal operation of the machine for determination of the setting. Note that digital relays normally do not respond to harmonics. If fundamental filtering relay is applied, the setting should be based on the unbalanced current. If generator voltage transformers (VTs) are connected wye-wye with the neutral grounded on both sides, any of the above relays must be time delayed to coordinate with VT fuses. The coordination problems can be eliminated by grounding a VT secondary phase wire instead of the secondary neutral.

- Device 59 – Overvoltage Relay/Element - This EM relay is an induction disk discrete overvoltage relay that is frequency compensated so that it retains its operating characteristics over a wide frequency range, or is an instantaneous plunger type relay that has nearly a constant volts-per-hertz characteristic over a wide range of frequency, with an auxiliary time delay relay. The overvoltage function in some microprocessor relay also can remain accurate over a wide frequency range. It is applied to protect the generator from overvoltage cause by sudden loss of load or malfunction of the voltage regulator. In some microprocessor relays, the overvoltage function may use positive sequence voltage as the operating quantity. In this case, the application should be checked to ensure correct operation in either pump or generate mode. The overvoltage relay is usually set to operate at 110 to 115% of rated generator voltage.

- Device 59N/B – Ground Backup Overvoltage Relay/Element - Ground fault protection for the bus between the delta connected transformer winding and generator/motor circuit breakers, when the transformer is energized and the circuit breakers are open, is provided by a ground overvoltage relay (device 59N) connected in the corner of the delta of grounded wye-broken delta connected potential transformers. This relay is Device 59N/B on Figure 1.

- Device 59N & 59SN (or 59N1) – Generator/Motor Neutral Overvoltage Relay/Element - The most common method of grounding a generator is through a high resistance. The usual form of high resistance grounding is a distribution transformer with its primary connected from the generator neutral to ground and the grounding resistor connected to the transformer secondary winding. A sensitive voltage relay (device 59N or 59N1) connected across the resistor will detect ground faults in the step-up transformer low voltage delta connected winding, the generator leads and up to 98% of the generator stator winding. The EM device 59N can be an either induction disk overvoltage relay that is frequency compensated or a plunger type relay. This relay measures fundamental frequency voltage. The setting of this relay requires actual measurement during the normal operation. The modern technology (solid state and microprocessor relays) measures the zero sequence component voltage ($3V_0$) as the ground voltage values across the neutral resistor as well as wye-grounded delta connected voltage transformers at the machine terminal. A modern digital relay(s) can be measured $3V_0$ if Wye/Wye connected VTs are used. However, precaution is required for measurement from machine terminal VTs which may cause operating from 3E0 could result in a misoperation for a blown fuse. Operation from the neutral ground resistor voltage does not have this drawback. Since some microprocessor relays can operate over a wide frequency range, the 59SN function (described below) is unnecessary. The microprocessor implementation of the 59N will also remain insensitive to the third harmonic during off-normal frequency operation. If the field is applied to the machine at subsynchronous speeds a voltage relay that is relatively unaffected by frequency is required to supplement 59N. This relay is designated Device 59SN. It can be either an induction disk relay that is frequency compensated or a plunger type relay. The pickup of a plunger type relay varies directly with frequency down to its dc pickup. Since generator voltage varies directly with speed (frequency), the relay can provide protection over a wide range of frequency during subsynchronous startup. The relays are sensitive to third harmonic voltage which is normally present; the trip circuit of this relay is armed during startup only.

- Device 60 – Voltage Balance Relay/Element - This relay is applied to block the incorrect operation of the voltage regulator or voltage dependent protective relays that could misoperate following loss of potential due to a blown fuse. A three-phase voltage relay compares voltage from two sets of potential transformers. The

relay recognizes loss of voltage from either set of potential transformers and initiates appropriate action. In pumped storage application, if the potential sources are on different sides of the reversing switch, the phase sequence of one set of potentials must be switched with the reversing switch to allow the relay to operate correctly. If the two potential sources are on different sides of the unit circuit breaker, the blocking action of this relay must be defeated when the circuit breaker is open. If both potential sources are form the machine side of the reversing switch, care must be exercised in setting and calibrating the relay. If machine rated voltage is not standard, and standard ratio potential transformers are used, the voltage applied to the relay will not be rated voltage. Reversed rotation will also change the sensitivity of this relay. Unless these variations are considered when applying settings to the relay, a protective relay may operate incorrectly before Device 60 can initiate blocking action for a blown potential transformer fuse. Most modern digital relays have this feature.

- Device 64F – Field Ground Relay/Element - This relay provides a means of detecting a ground on the generator excitation system and rotor. Since the generator field and rotor is ungrounded, a single ground will not cause damage or affect the operation of the generator. However, the stress to ground at other points on the field and rotor is increased when transients are induced; and this increases the probability of a second ground. This second ground would short a portion of the field or rotor and might cause unbalances and vibration that could damage the machine. The recommended practice is to trip the machine when the first ground occurs. However, some companies prefer to alarm and let the operator shut down the machine in an orderly manner. The modern microprocessor relay detects a field ground by injecting a pulsed signal into the field and rotor, and measuring the insulation impedance continuously. The relay will alarm when the impedance measurements reaches the first preset value and trip when the measured impedance reaches the second set point.

- Device 64G – Stator Ground Relay/Element - This relay is a composite of a ground overvoltage (device 59N1) tuned to fundamental frequency and third-harmonic under voltage (device 27N3 or 27TN) elements. This is a newer concept developed after the 1975 Survey. When applied together the combination (overlapping the protection zones by 27N3 & 59N1) provide protection for ground faults over 100% of the stator winding. Typically, the 27N3 (or 27TN) is blocked when the generator is offline. A modern digital relay is capable of the function of 3rd harmonic voltage differential (or 3rd harmonic ratio comparator) which comparing the 3rd harmonic voltage measurements at the terminal and the neutral. See the section 7.18 of C37.101 for the details.

- Device 64S – Stator Ground Relay/Element by Subharmonic Injection - This relaying concept is also fairly new. There are two (2) schemes of stator ground impedance measurement; (1) Injecting pulsated signal to the stator windings and calculating the impedance during measurement period, and (2) Injecting pulsed signal to the stator windings and measuring the impedance continuously. This function can detect faults over 100 percent of the stator winding. It requires no additional consideration for application in generator or pump mode. It is usually blocked during generator starting.

- Device 78 – Out-of-Step (aka Phase Angle Measuring) Relay/Element - During a loss-of-synchronism (aka out-of-step) between a unit and a system, the apparent impedance at the unit terminal will vary as a function of the unit and system. This variation in impedance may be readily detected by impedance relaying (device 78). However, a measurement of phase angle for detecting an out-of-step is commonly used for a motor mode operation (device 55). See C37.96 for the details.

- Device 81G – Overfrequency Relay/Element for Generating Mode - With the unit operating mode, as an overfrequency relay, this device provides backup for the mechanical overspeed device 12. Typically, the relay would be set to operate at 3 to 5% above full load rejection speed. This application is not unique to pumped storage unit protection. As an underfrequency relay, this device could apply to a unit for operating in the synchronous condenser mode in the generating direction.

- Device 81M – Underfrequency Relay/Element for Pumping Mode - This underfrequency relay, armed only when the unit is operating in the pumping mode, is used to detect loss of incoming power while pumping. See Device 37. Frequency measurement is crucial for this device. An underfrequency relay may also be used to provide the first step of load relief in an underfrequency load shedding program. Regardless of the purpose for which the relay is installed, it will perform both functions; therefore, coordination with the load shedding program should be considered when setting this relay. If the monitored voltage is from potential transformers on the unit side of the circuit breaker, the relay trip circuit should not be armed until the circuit breaker is closed.

- Device 87 – Differential Relay/Element - The generator/motor differential employs conventional generator differential relays. The unit differential, including both the generator and transformer, employs conventional harmonic restraint transformer differential relays. The transformer differential employs conventional harmonic restraint transformer differential relays. Differential protection of pumped

storage units deviates from the conventional only where the differential zone includes the phase reversing switch. Proper current transformer secondary connections to the differential relays can be maintained by one of the following methods:

V. TYPICAL SCHEMES (FIG, 1~6) -

There is variety of PSH unit protection schemes; however the following schemes are shown typical and common schemes used by the current industries which reflection by the 2012 Survey:

- Scheme 1 (Discrete relays with CT switching by Aux contacts): - Switch current transformer secondary leads by means of auxiliary contacts of the reversing switch (Fig. 1). In addition, figure 2 shows typical differential element connections with multifunction relays.

- Scheme 2 (Digital relays with phase reversing switch): - Provide additional current transformers (selecting phases according to the reversing switch such as ABC for generator mode, CBA for motor mode and connect like phases in parallel at the reversing switch Figure 3 shows an across the line start installation where two electrically interlocked circuit breakers are used instead of a reversing switch. Circuit breaker current transformers of like phases are connected in parallel. (Fig. 2 & Table 1)

- Scheme 3 (Differential relay with dedicated CTs): - Provide two sets of differential relays for each differential zone that includes the reversing switch. One set is connected for generator operation and the other for motor operation. Auxiliary contacts of the reversing switch arm the contacts of the proper set of relays (Fig. 3). In addition, the typical unit protection (devices 11GM1 & 11GM2) can be connected without switching CTs and phase rotation as shown in the figure.

- Scheme 4 (Two sets of differential relays with switching outputs): - Exclude the reversing switch from any differential zone and provide separate protection for that area (Fig. 4).

- Scheme 5 (Distance relays eliminating blind zones): - Provide two current transformers in each of the switched phases. Connect two current transformers in series and short circuit one or the other with auxiliary contacts of the reversing switch to maintain proper phasing for either position of the reversing switch (Fig. 5). (See Device 21)

- Scheme 6 (Differential relay with switching series connected CTs) - Provide two current transformers in series on the rotating phases (switching A and C phases in the Fig. 6). CTs are switching prior to changing mode of the operation.

Note-1: Schemes #1, #3 & #5 permit flexibility in choosing the zone of differential protection. A unit differential scheme that includes both the machine and transformer can be used.

Note-2: If Company protection philosophy does not permit switching current transformer leads; Schemes #2, #3 or #4 can be used.

Note-3: Scheme #1 is the most economical since no additional relays or current transformers are required. Schemes #2 and #5 require additional current transformers. Scheme #3 requires additional current transformers and differential relays. Scheme #4 requires additional relays.

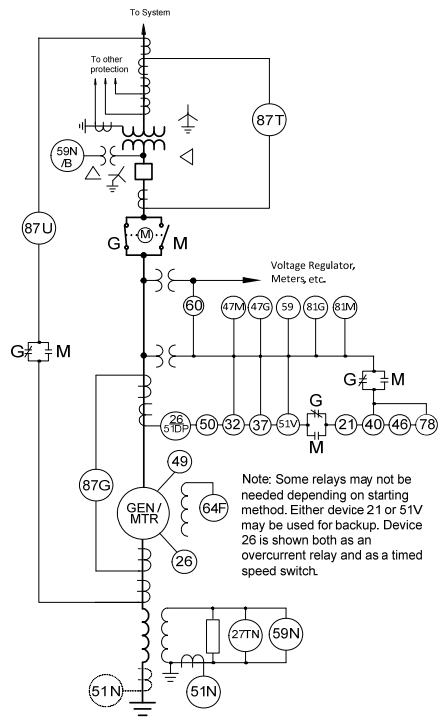

Fig. 1. Scheme 1 – Protection using discrete relays.

Note: See table-1 for

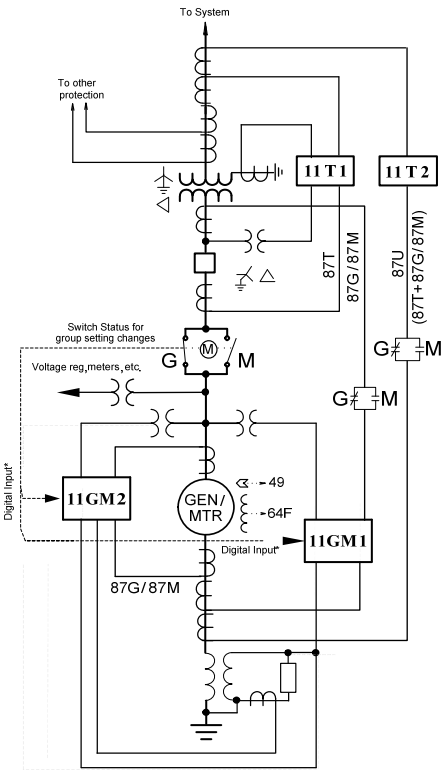

Fig. 2. Scheme 2 – Protection using digital relays. (See table-1 for applicable protective elements)

Multifunction Device		Protective Elements	Ground Elements	Differential Elements
11T1		50, 51, 51BF	59G, 51GB	87T
11T2		50, 51	-	87G, 87T
11GM1	11G1	21, 24, 32, 40, 46, 49, 51BF, 59, 64F, 78	27TN(27N3), 59N1	87G
	11M1	21, 24, 26, 27, 32, 37, 40, 46, 47M, 49, 59, 64F, 78	27TN(27N3), 59N1	87M
11GM2	11G2	21, 24, 32, 40, 46, 49, 51BF, 59, 64F, 78	27TN(27N3), 51N, 59N1	87G
	11M2	21, 24, 26, 27, 32, 37, 40, 46, 47M, 49, 59, 64F, 78	27TN(27N3), 51N, 59N1	87M

Table 1 - Applicable elements for the scheme 2 (Fig. 2).

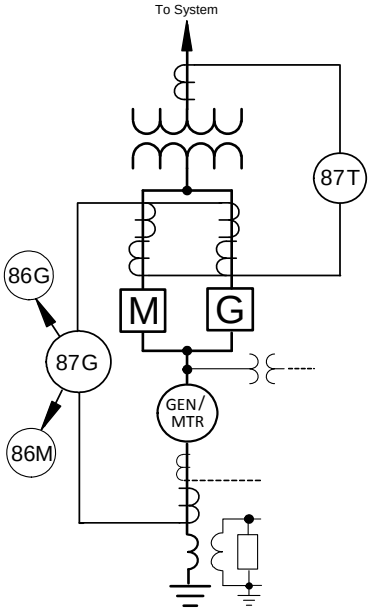

Fig. 3. Scheme 3 - Differential relay connections with dedicated CTs.

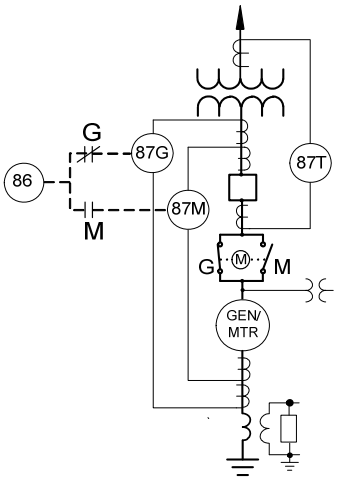

Fig. 4 Scheme 4 - Differential relay connections with switching outputs

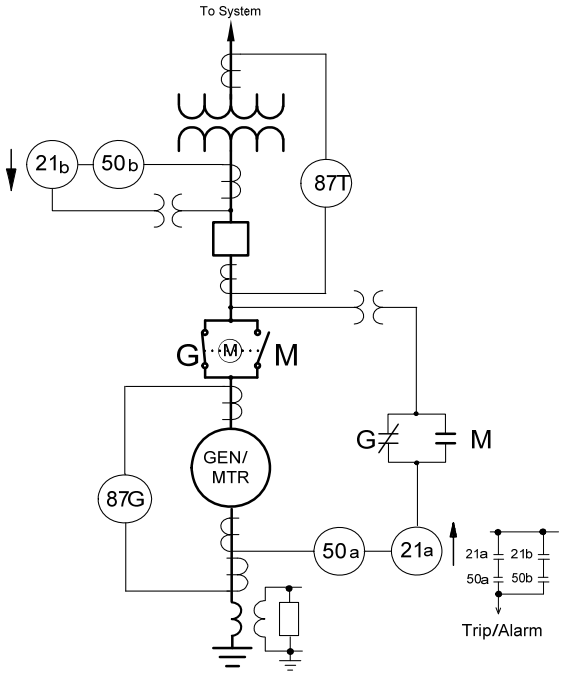

Fig. 5. Scheme 5 - Distance relays protecting the blind zones.

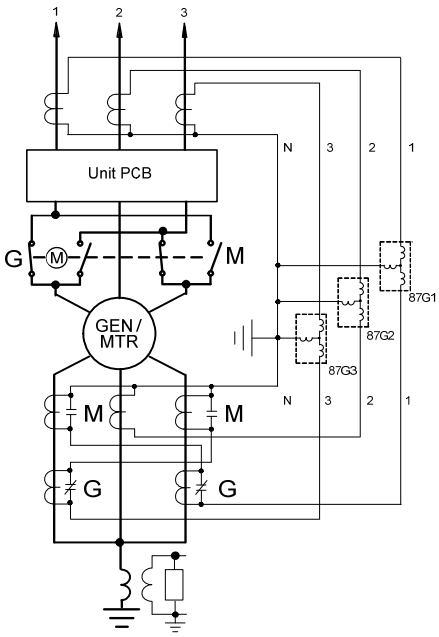

Fig. 6. Scheme 6 - Differential relay connections using series connected CTs**.**

VI. SUMMARY OF 2012 SURVEY RESULTS

The following charts are summarized the results of 2012 survey.

Notes for the following charts:

- Chart-1 is categorized with the unit sizes participated this survey.
- Chart-2 is the result of the question about “Did you upgrade the protection for PSH units?”
- Chart-3 is a based on the question of “What type of protective relay did you use for the upgrade?”
- Chart-4 is the result of the question of “What features did you consider important when you select protective relays for the upgrade?
- Chart-5 is the answers of the questionnaire of “What is the reason for upgrade protective relays?”
- Chart-6 is the summary of the question of “How did you achieve the phase rotation for the protection of GEN & MTR modes?”

Chart-1: Unit Sizes of This Survey

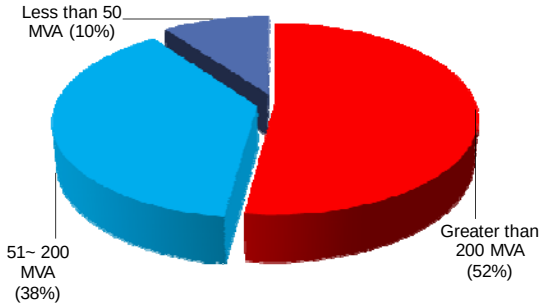

Chart-2: Upgrade Protection

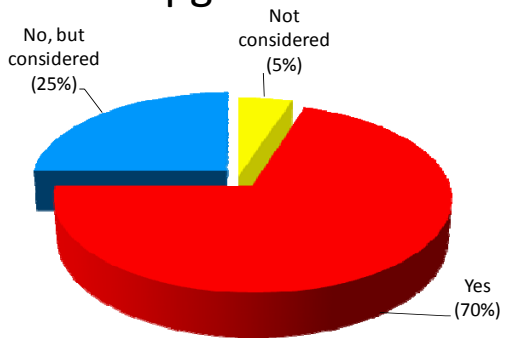

Chart-3: Protective Relay Types Used

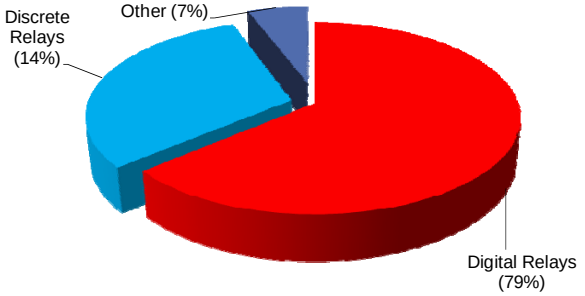

Chart-4: Important Feature

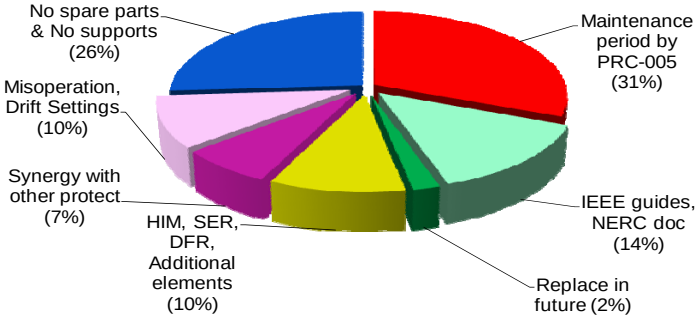

Chart-5: Reasons for Upgrade

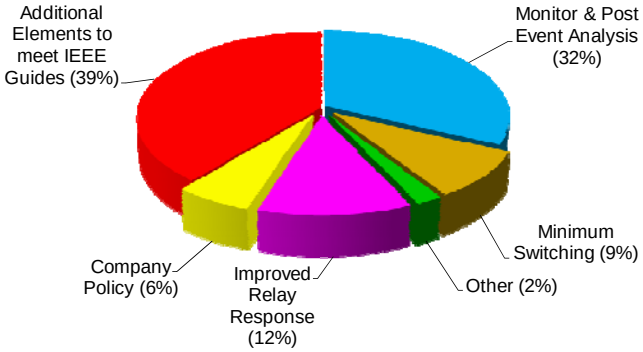

Chart-6: Achieve Phase Rotation

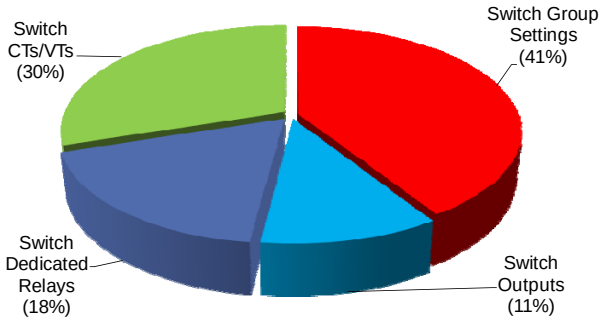

VII. SUMMARY & CONCLUSION

The protection of pumped storage hydroelectric (PSH) units although essentially the same as conventional generators and motors requires additional relays and close attention to the phase relationship of relay inputs because of the two modes of operation.

The original paper in 1975 was based on a survey mainly of discrete relays. Since then there has been a significant advancement in relay technology. For instance the relays applied in 1975 generally, did not have good frequency tracking characteristics but microprocessor technology provides excellent performance in this area.

Consequently, an updated survey was conducted in 2012 in order to find the recent industry protective relaying practice and the trend of protective relay application on pump storage units.

Also, this paper reviews the various protective devices that may be employed in the protection of a PSH unit, which includes the generator/motor, phase reversing switches, circuit breakers, main transformer, and the connections between these components. It does not include protective devices associated with auxiliary equipment such as station service transformers, starting motors, static converter starting devices, etc.

This paper has provided a brief review of the protective relay application history of pumped storage systems. The pumped storage systems includes all available starting methods of pumping modes, typical protection schemes for discrete relays and digital relays. This paper was prepared to see what the significant changes from the original paper are.

The significant changes, between the 1975 and 2012 survey results, are as follows:

- Regulatory requirements -After the North American disturbance on August 14, 2003, FERC (Federal Energy Regulatory Commission) mandated many new protection requirements for generators. PRC-002 required sequence of events record (SER) and fault record (FR) data at select locations. Micro-processor relays can satisfy these SER & FR requirements. Many utilities pointed out these capabilities were one of their key issues for the decision of relay replacement. Some of utilities indicated that the maintenance interval requirements of NERC PRC-005 also influenced their decision to upgrade protection, as the maintenance interval may be expanded for relays having self-diagnostics and continuous monitoring.

- Synergy with other projects - Due to the budgetary issues and time consuming process of replacing relays, it requires a well-planned schedule. Some of the utilities had pointed out that the relay replacement had been coordinated with other on-going works/projects.

- Reliability of protective relays - Some of the utilities had indicated that they had problems with older relays such as misoperations, frequent calibration (drifting the settings), decreased reliability, etc. Therefore, some of the utilities decided to replace the protective relays in order to increase dependability. Some utilities had indicated that for 100% stator ground protection which the harmonic injection method is beneficial for reliability due to the independency of operation modes of PSH unit, and it verifies that no grounded phase conditions exist prior to starting a unit.

- Vender's support -Lack of manufacturer's supports including instruction and spare parts availability – Most PSH units are over 40 years old, which is beyond the expected life of the original relays. Relay manufacture supports for many of these relays may not be available. The 2012 survey indicated that this is one of the significant reasons to change the protective relays on the PSH units.

- Improved protections and Features - From the 2012 Survey, the following areas were indicated as the improved protections and features since the original 1975 Survey:
  1) New technology – In the past each protective function was provided by each relay as shown in the 1975 survey report. Some utilities had indicated that new technology provided significant benefit as a digital relay includes the majority of the standard protection in a single package. It became easier to apply the standard PSH unit protection.
  2) Grouped setting - The availability of setting groups is a significant technology improvement for PSH unit protection, reducing the amount of wiring and switching elements for the generation & motor mode changes.
  3) Packaged design - In the past, the protective relays were single function devices and required many relay panels. The digital relay technology requires less panel space and wiring. Redundant protection can be installed in the existing panel space, vacated when a multitude of discrete relays are replaced. The application of redundant protection became much easier.
  4) 100% stator ground protection – A 100% stator ground protection scheme was not available in 1975. Some utilities indicated that reason for upgrade was to install 100% stator ground protection.
  5) Field Ground & Thermal Protection- New digital relays can be incorporated with field ground and thermal protection.
  6) Event records - In the past the cause of tripping was difficult to determine due to the limited event information, new digital relays allows to Sequence of Event records and capture oscillograph records for the post event analysis.
  7) Self-Diagnosis - Most digital relays have abilities to perform self-diagnosis of relay status.

In conclusion, the 2012 survey revealed valuable information regarding the modern application of PSH unit protection for the last 40 years. Advancements in digital (microprocessor) relay(s) provided a variety of optional protection and logic, group settings, internal phase rotation, real time measurements, sequence of event records, waveform captures, 3rd harmonic measurement and 100% stator ground subharmonic signal. Digital (Micro-processor) relays also require less panel space and amount of wiring. These significant improvements since the 1975 survey benefit the end user with better protection and more metering and event data.

ACKNOWLEDMENT

The author would like to thank to Gary Kobet (TVA), Wesley Ross (Duke Energy) and Mike Jensen (PGE) who shared their precious accumulated experiences with WG-J6 members which were challenged during their recent PSH units' protection rehabilitation projects.

REFERENCES

[1] C37.8-2008, "IEEE Standard for Electrical Power System Device Function Numbers, Acronyms, and Control Designations"
[2] C37.96-2012, "IEEE Guide for AC Motor Protection"
[3] C37.101-2006, "IEEE Guide for Generator Ground Protection"
[4] C37.102-2006, "IEEE Guide for AC Generator Protection"
[5] NERC Technical Reference Document, "Power Plant and Transmission System Protection Coordination" Available: http://www.nerc.com/comm/pc/spcs/SPCS_DL
[6] IEEE Transaction Document, "Protective Relaying for Pumped Storage Hydro Units" vol. PAS-94, no. 3, May/June 1975, pp. 899-907.
[7] US Pumped Hydroelectric Plants, Available: http://hydropower.inl.gov/resourceassessment/pumped-storage-hydro-assessment-report-published- version-20mar14.pdf and other various websites.
[8] NERC, PRC-002-2, "Disturbance Monitoring and Reporting Requirements," Available: http://www.nerc.com/pa/Stand/Project%20200711%20Di

sturbance%20Monitoring%20DL/PRC-002-2_Disturbance_Monitoring_clean_2014Oct28.pdf.
[9] NERC document, PRC-005-1, "Transmission and Generation Protection System Maintenance and Testing," Available: http://www.nerc.com/files/PRC-005-1.pdf.
[10] NERC document, PRC-025-1, "Generator Relay Loadability," Available: http://www.nerc.com/pa/stand/Reliability%20Standards/PRC-025-1.pdf.
[11] Various websites.

Table 2 - Major North American PSH Installations

FACILITY, Location (in Service)	Unit x (MW/unit)=MW in total
Bull Shoals, AR (1952)	4x85=340
Castaic Dam, CA (1973)	6x261 =1,566
Eagle Mtn, CA (Planned)	1,300
Edward C. Hyatt, CA (1967)	6x135=810
Helms, CA (1984)	3x400=1,200
Iowa Hill, CA (Planned)	400
John Eastwood, CA (1987)	1x200 =200
San Luis Dam, CA (1968)	8x53 =424
Cabin Creek , CO (1967)	2x166 =324
Mount Elbert, CO (1981)	2x106 =212
Alberta, Canada (Planned)	80~150
Marmora, Canada (Planned)	400
Adam Beck, Canada (1930)	10 x17=170
Rocky River, CT (1928)	3x10 =30
Carters Dams, GA (Planned)	4x125=500
Rocky Mtn PSS, GA (1995)	3x365 =1,095
Wallace Dam, GA (1980)	6x50 =300
Parker Ranch, HI (Planned)	10~200
Bear Swamp, MA (1974)	2x300 =600
Northfield Mtn, MA (1972)	4x270 =1,080
Ludington, MI (1973)	6x312 =1,872
Mt. Hope, NJ (Planned)	2,000
Yards Creek, NJ (1965)	3x110 =330
Blenheim Giboa, NY (1974)	4x300 =1,200
Lewiston PG, NY (1961)	12x20 =240
Salina PG Plant, OK (1971)	2x130 =260
Muddy Run PG, PA (1968)	8x135 =1,080
Seneca PG, PA (1970)	2x228 =456
Fairfield, SC (1978)	8x64 =512
Bad Creek, SC (1991)	4x266 =1,064
Lake Jocassee, SC (1975)	4x177 =710
Big Bend, SD (1964)	493.3
Raccoon Mtn, TN (1978)	4x400 =1,600
Hiwassee, TN (1957)	74+80 =154
Bath County, VA (1985)	6x500 =3,000
Smith Mtn, VA (1979)	5x112 =560
Grand Coulee, WA (1973)	6x50 = 300

Note: 18 plants in 1975 Survey, 28 plants in 2012, & 7 plants in planned stage in 2012 Survey.

1. Source: Idaho National Laboratory Website

- Joe Uchiyama (Chair)–USBR, Denver, CO – jchiyama@usbr.gov
- Dale Finney (Vice Chair)–Schweitzer Engineering Laboratory, Sidney Mine, Canada – dale_finney@selinc.com
- Matthew Basler– Basler electric-Highland IL - mattbasler@basler.com
- Zeeky Bukhala–GE Power & Water-Schenectady, NY - zeeky.bukuhala@ge.com
- William English-Consumer Energy-Jackson, MI - william.english@consumerenergy.com
- Randy Hamilton-Basler electric-Highland IL - randyhamilton@basler.com
- Wayne Hartmann-Beckwith Electric-Largo, FL - wayniac001@aol.com
- Hasnain Ashrafi–Sargent & Lundy LLC – Chicago, IL - sg.hasnain.ashrafi@sargentlundy.com
- Chuck Mozina-Beckwith electric-Palm Harbor, FL - cmozina@aol.com
- Robert Pettigrew-TRC Engineering-Asheville, NC - robpet50@ieee.org
- Michael Reichard-GE Power & Water-Schenectady, NY – michalel.reichard@ge.com