BUS BAR PROTECTION

A NEW AND RELIABLE APPROACH

2016 Texas a&m Protective Relay Conference

Vincent Duong, P.E., PMP

Jay Cueco, P.E.

Introduction

- The need of Bus Protection
- Brief Description: Known Bus Protection Methods and Their Limitations
- Introducing a New and Reliable Approach:
  - ❖ Why is the protection scheme needed
  - ❖ What has to be considered
  - ❖ How is the scheme developed, tested, and validated
  - ❖ What is the result
  - ❖ How to further improve the scheme
- Summary and Conclusion

© ABB Group

Overview – Why bus protection is needed

- Substation or switchgear bus is one of the most critical elements because it is the conjunction point of electric power flow
- Bus protection is required:
  - isolation of electrical faults - fast
  - avoiding life threatening event and severe equipment damage
  - minimizing electric service interruption

© ABB Group

Conventional Method – Arc Flash Detection

- Microprocessor relay combining with fiber loops or fiber point sensors located strategically throughout the switchgear to detect the light discharge caused by an arc hazard event
- The fastest operation on SWGR bus arc faults
- Potentially insensitive to non-arc type bus faults
- Only applicable towards enclosed switchgear

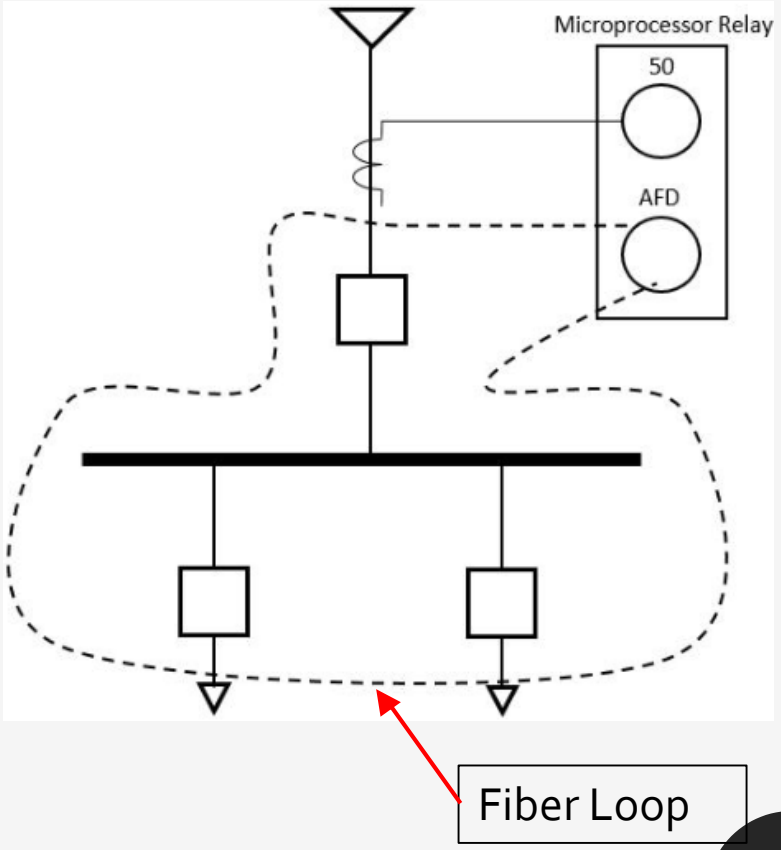

© ABB Group

Conventional Methods – Low Impedance Differential

- Kirchoff's Current Law - summation of CT secondary currents flowing into the junction point is monitored by an overcurrent relay
- CT saturation may be a concern
- To improve security, the pickup setting may need to be de-sensitized or a time delay may need to be added

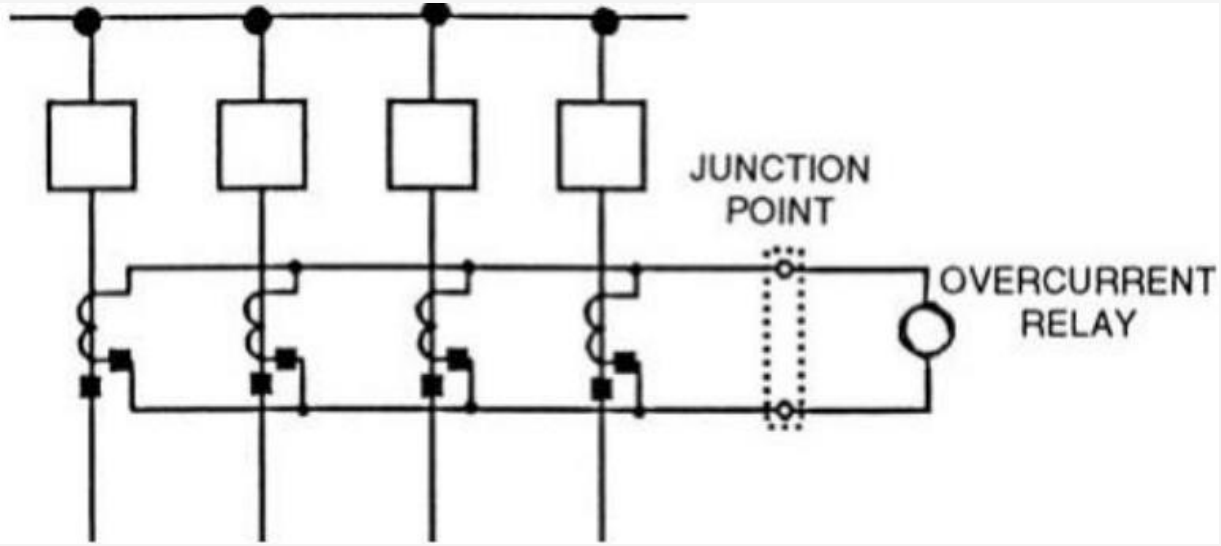

© ABB Group

Conventional Method – High Impedance Differential

- Kirchoff's Current Law - with a high impedance relay
- Improved security - negating CT response dissimilarities by imposing the CT secondary currents through the high impedance component
- Requires a rigorous engineering study to properly account for CT specifications and proper junction point wiring
- Does not offer flexibility for the addition of new loads or sources to the existing bus

© ABB Group

Conventional Method – High Impedance Differential

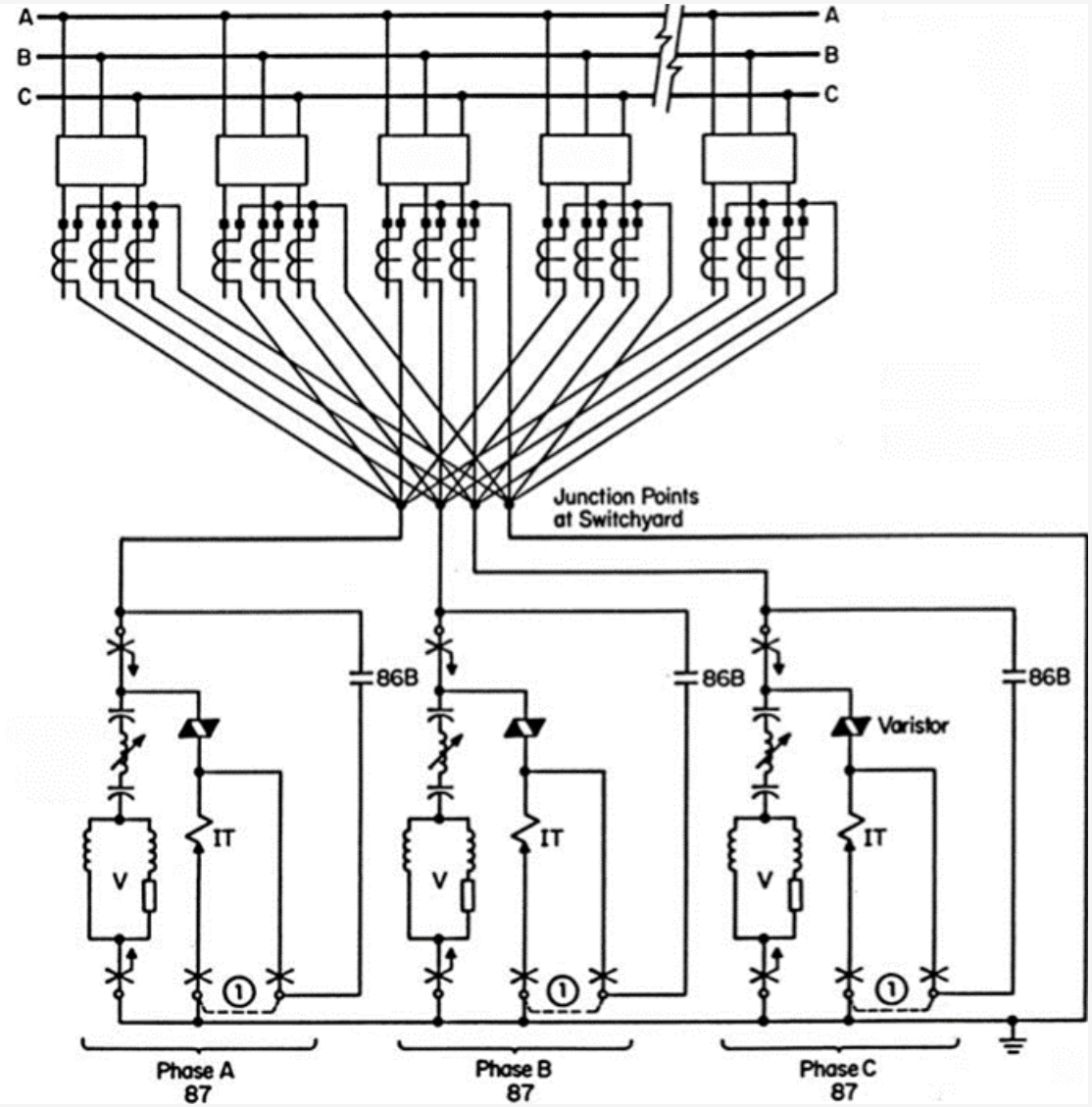

© ABB Group

Conventional Method – Differential Spot

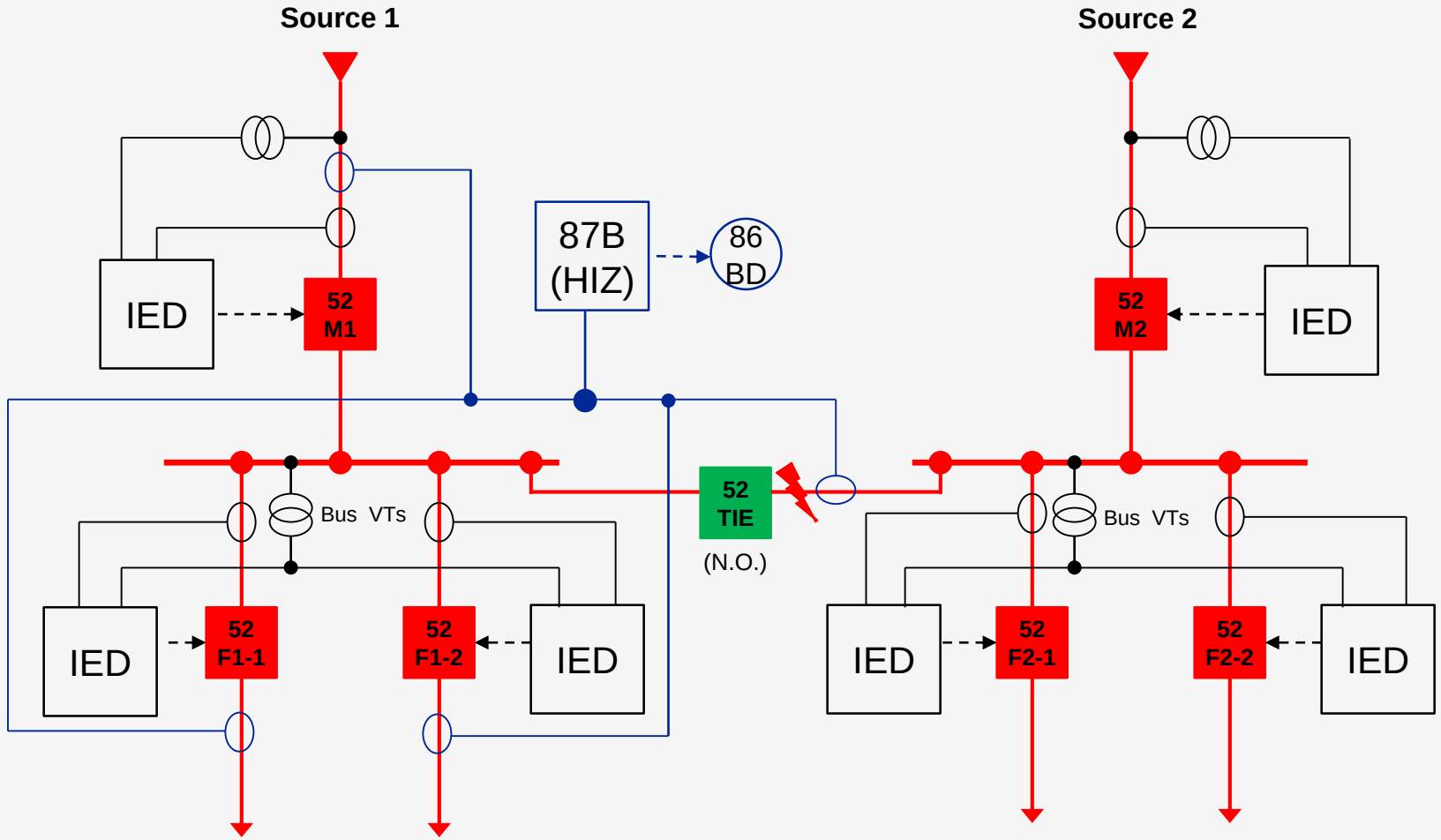

© ABB Group

Introducing a new and reliable approach

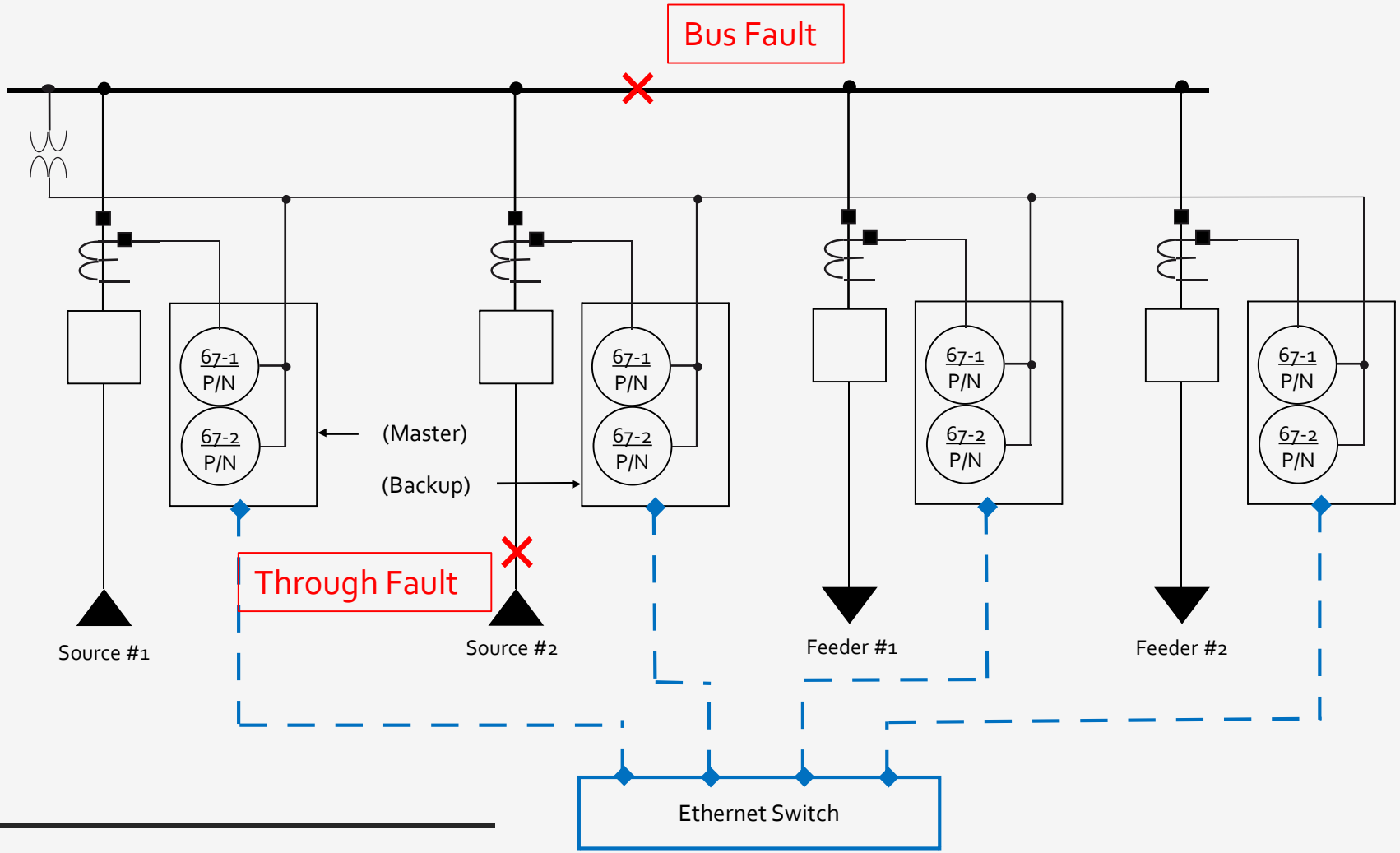

© ABB Group

Novel Bus Protection Scheme - Overview

- Utilization of directional overcurrent elements of feeder protection relays
- Reliable: operates only against faults on the protected bus
  - All contributing breakers are tripped and block-closed
  - Acceptable operating speed
- Secured: able to distinguish external (through) faults
  - Allows the individual breaker to trip first

© ABB Group

Unique Features

- Flexible to multiple incoming/contributing sources
- Dedicated bus protection relay is not required
- The bus protection is accomplished by each breaker's associated relay, which is usually already existing, i.e. feeder protection relay and breaker failure relay
- A "master" relay is assigned to perform the bus protection scheme with a "backup" relay automatically assuming the "master" relays operation during relay failure
- All contributing relays are communicating to the "master" and "backup" relays via Ethernet based IEC61850 GOOSE communication

© ABB Group

Scheme Development

- IEC61850 compliant and capable of GOOSE communication
  - If the constant integrity/quality check of the GOOSE communication is bad, the scheme shall be disabled and an alarm is issued immediately
- Two phase and ground directional overcurrent elements:
  - 67P/N-1 as reverse direction (REV) for detecting fault current flow into the bus
  - 67P/N-2 as forward direction (FWD) for both detecting and tripping fault current flow out of the bus (through) fault

© ABB Group

Principle of Operation (Internal Bus Fault)

- Bus fault occurs
- At least one reverse direction (REV) element is detected
- Not any forward direction (FWD) element is pending
- The "master" relay trips and block-closes all contributing breaker via GOOSE

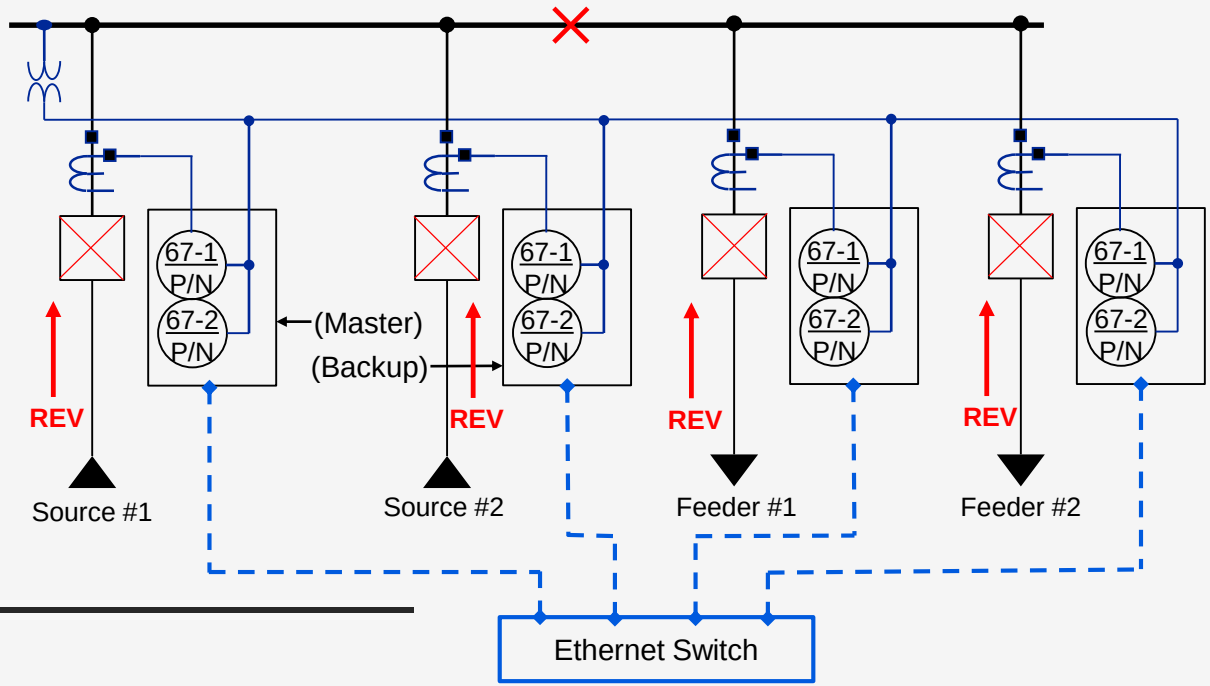

© ABB Group

Principle of Operation (External Through Fault)

- An external/through fault occurs, i.e. on Feeder #2
- Feeder #2 relay FWD detected
- The rest of relays either see REV or <u>not</u> FWD
- Feeder #2 breaker trips

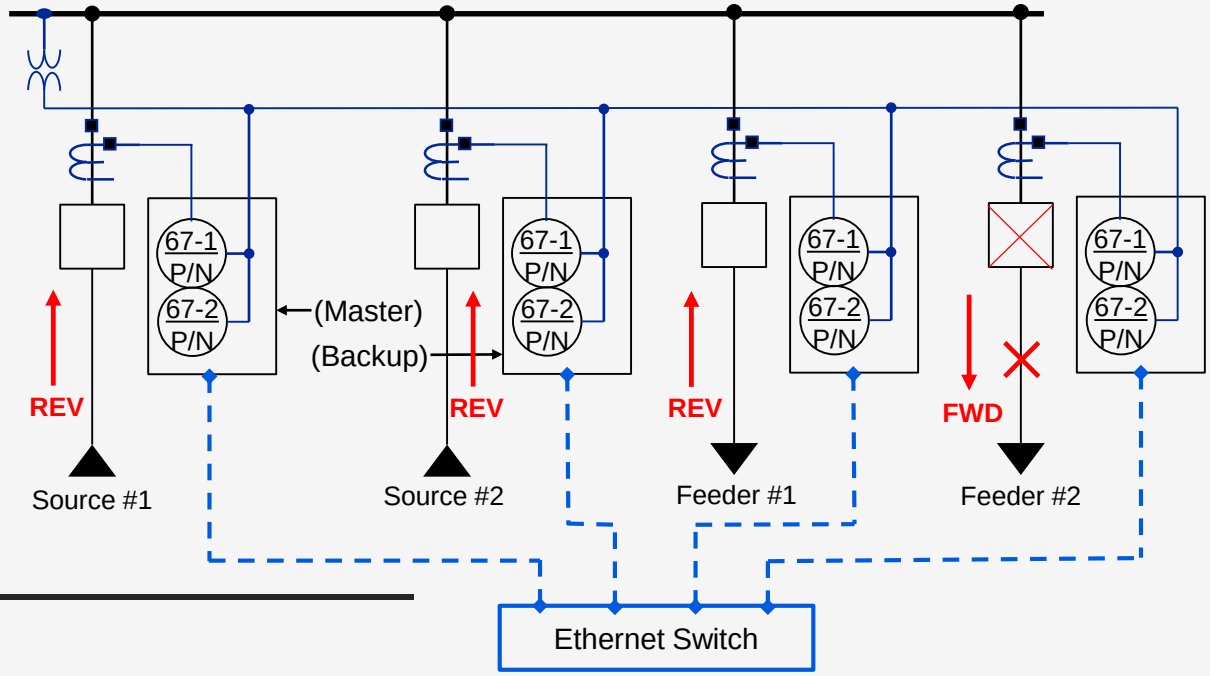

© ABB Group

Logic Diagram

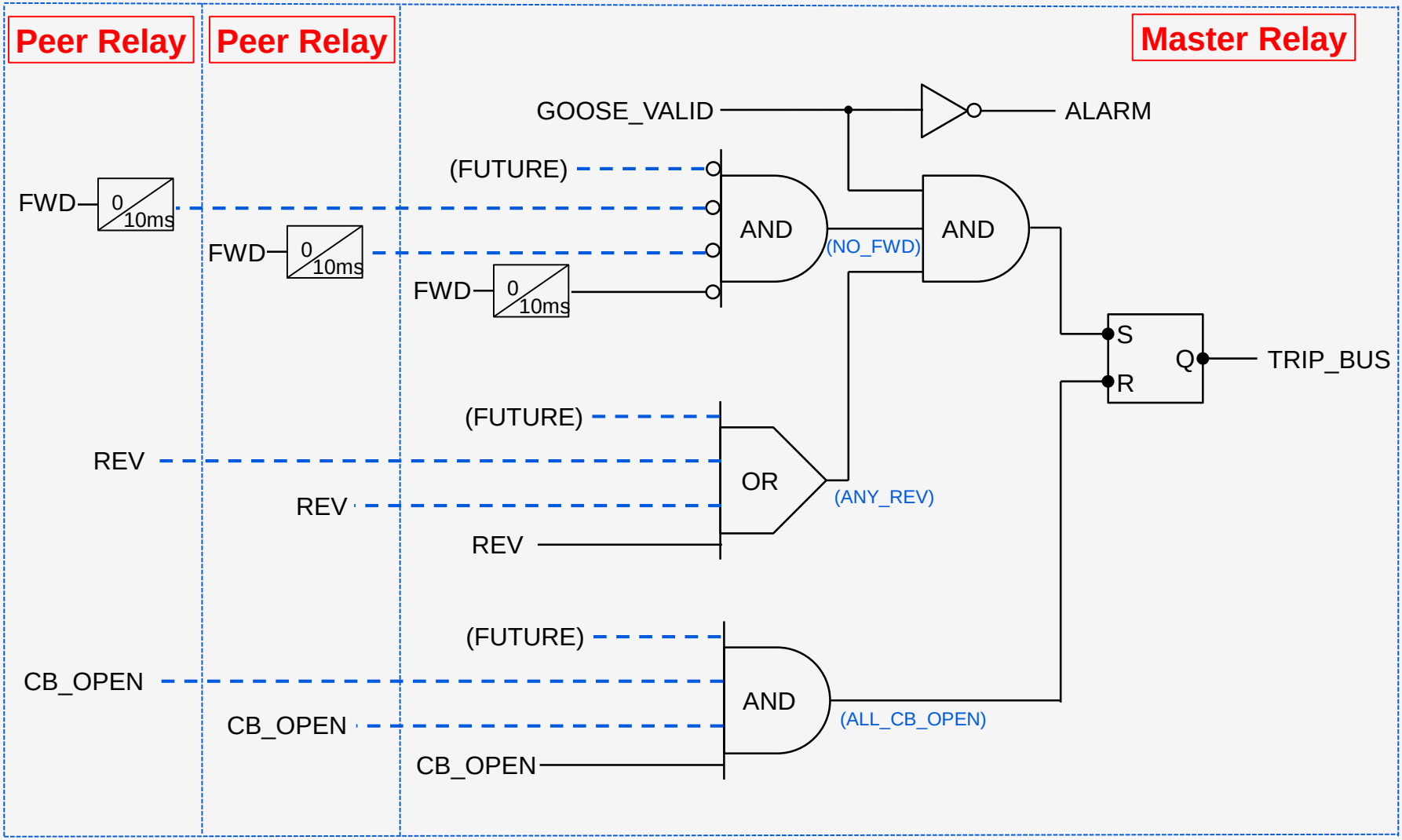

Legend: GOOSE Signal

© ABB Group

Scheme Validation Testing Results

Operating Times for Internal Bus Fault

Trials	Processing Time (ms)	Processing Time (cy)
1	50.50	3.03
2	51.00	3.06
3	49.70	2.98
4	55.30	3.32
5	51.50	3.09
6	51.80	3.11
7	52.10	3.13
8	55.20	3.31
9	56.60	3.40
10	54.20	3.25
Average	**52.79**	**3.17**

Operating Times for External Through Fault

Trials	Processing Time (ms)	Processing Time (cy)
1	50.10	3.01
2	53.20	3.19
3	53.20	3.19
4	50.90	3.05
5	51.20	3.07
6	51.60	3.10
7	56.10	3.37
8	51.20	3.07
9	53.30	3.20
10	55.50	3.33
Average	**52.63**	**3.16**

© ABB Group

Benefits versus Conventional Schemes

- Adaptable towards increases in system fault levels without the need to upgrade system components
- Flexible to new bus additions of loads and sources without labor intensive scheme changes versus conventional schemes.
- Reduction of wiring versus conventional schemes and potentially removes the requirements for dedicated bus CTs
- Improved scheme security by being immune to the effects of CT saturation
- Capable of protecting "double-bus single-breaker" arrangement without the need for additional relaying equipment
- "Free" backup bus protection scheme
- Communication redundancy

© ABB Group

Backup bus protection

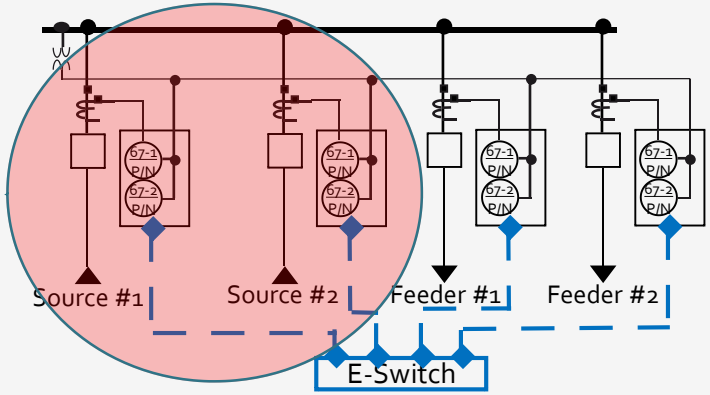

52
Master Relay
IRF
52
Backup Relay
GOOSE_VALID
ALARM
NO_FWD
ANY_REV
AND
S
R
Q
TRIP_BUS
BI
ALL_CB_OPEN
Source #1
Source #2
TRANSF TRIP
86/94

Legend: GOOSE Signal

© ABB Group

Communication redundancy

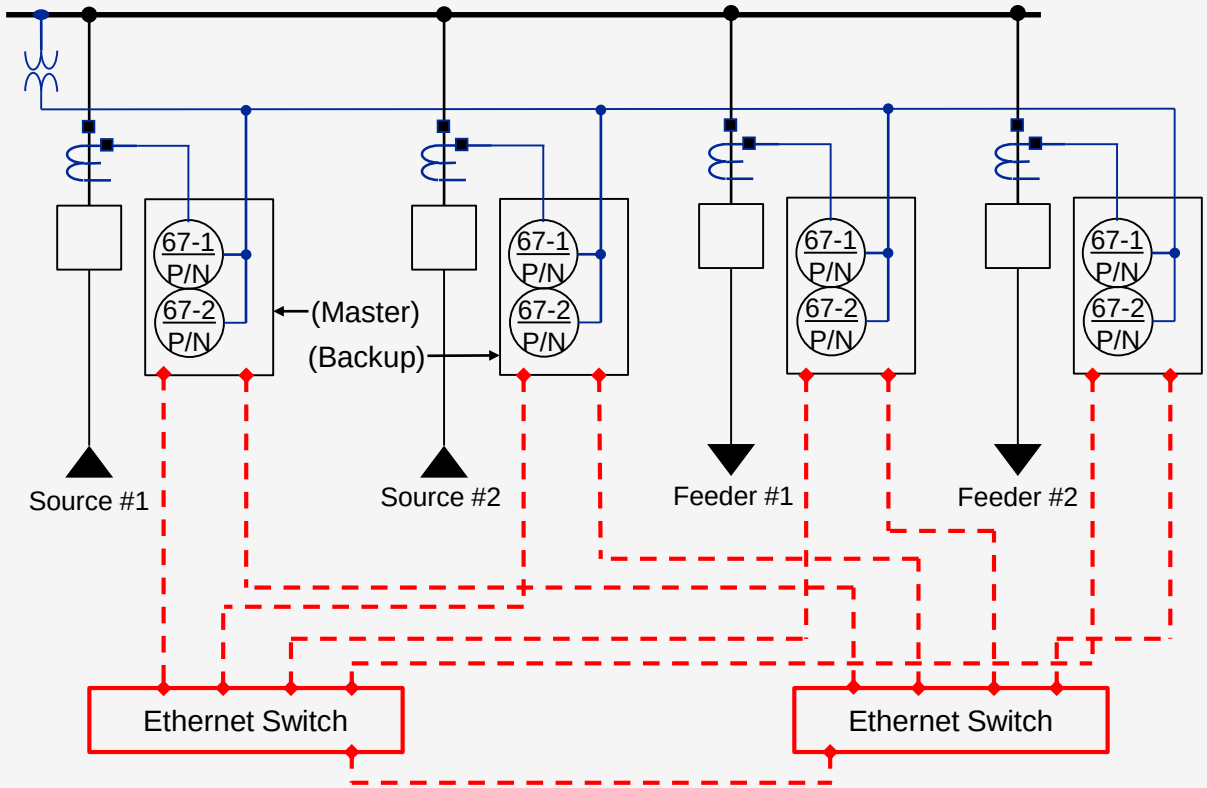

© ABB Group

Summary

- Accurate performance with acceptable operating speed
- Essentially low cost or no additional cost of bus protection relay
- Can be implemented in any bus configurations: single, double, one-and-a-half, double-bus-single-breaker, etc.
- Can be applied to either switchgear bus or open air substation bus
- Immune to CT saturation
- Flexible to future bus expansion/modification
- If a bus protection already exists, KEEP IT!

© ABB Group

Question?

© ABB Group