A Review of Intertie Protection

Terrence Smith, GE Grid Solutions
George Pitts, Tennessee Valley Authority

2016 Texas A&M Relay Conference

Background

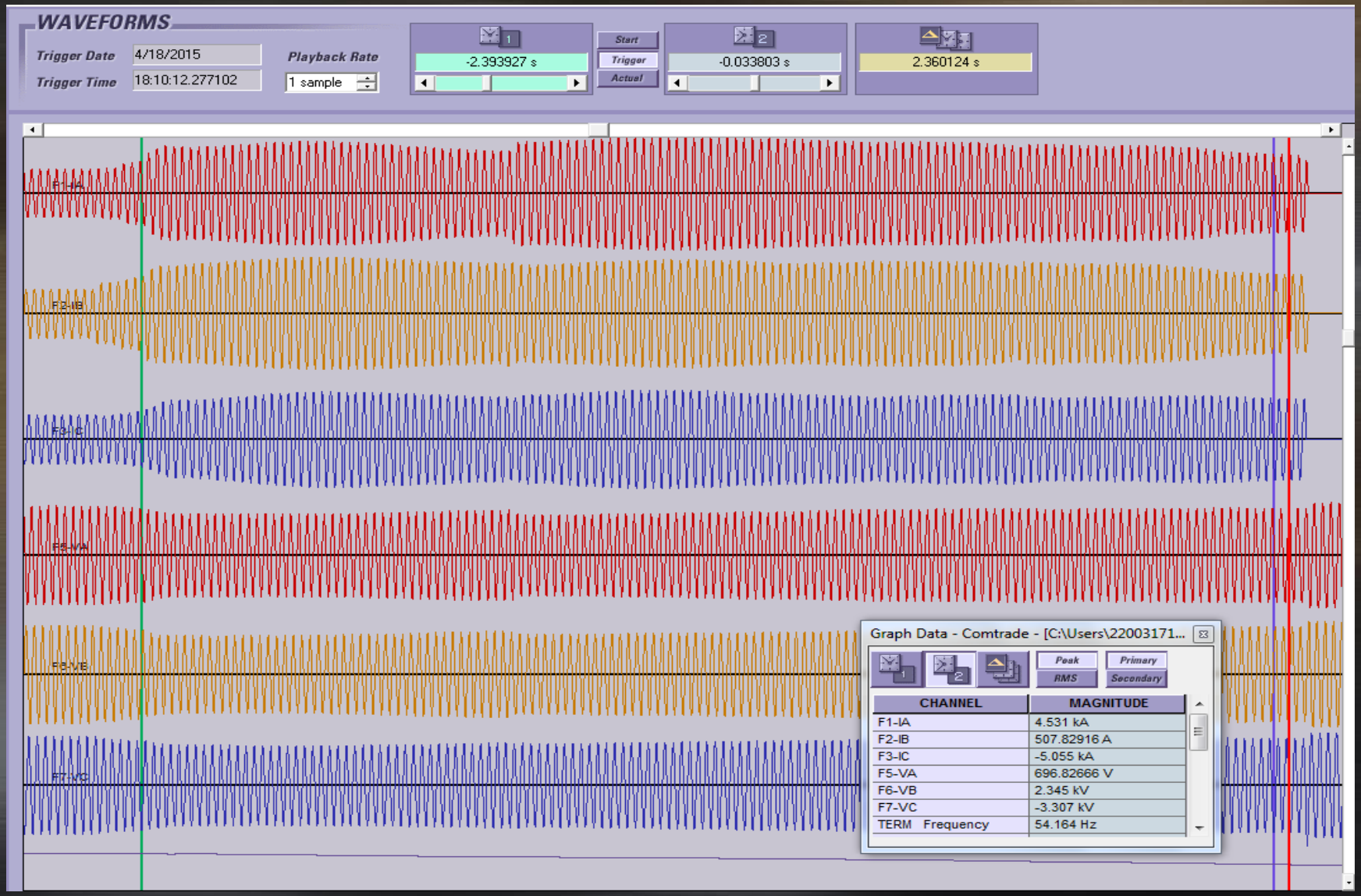
WAVEFORMS
Trigger Date
4/18/2015
Trigger Time
18:10:12.277102
Playback Rate
1 sample
-2.393927 s
Start
Trigger
Actual
-0.033803 s
2.360124 s
F1-IA
F2-IB
F3-IC
F5-VA
F6-VB
F7-VC
Graph Data - Comtrade - [C:\Users\22003171...
Peak
RMS
Primary
Secondary
CHANNEL
MAGNITUDE
F1-IA
4.531 kA
F2-IB
507.82916 A
F3-IC
-5.055 kA
F5-VA
696.82666 V
F6-VB
2.345 kV
F7-VC
-3.307 kV
TERM Frequency
54.164 Hz

Directional Time Over-Current

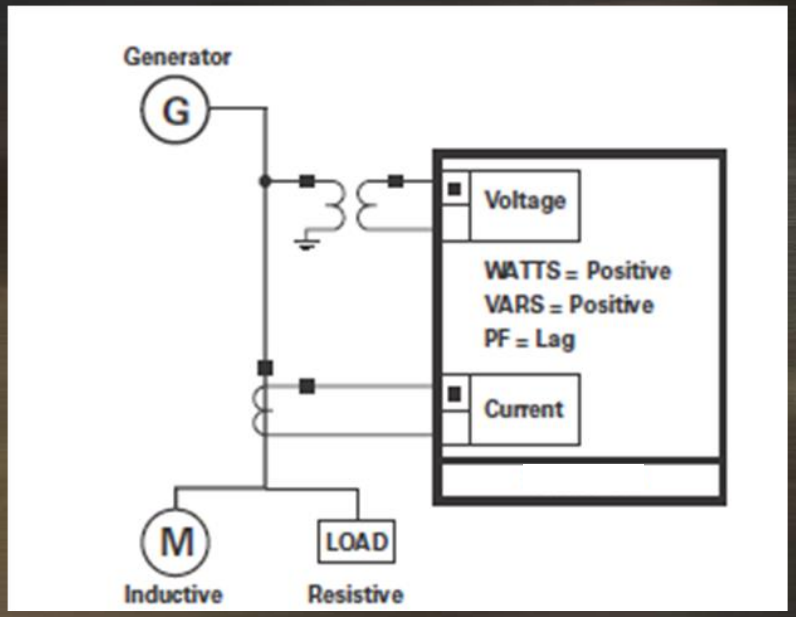

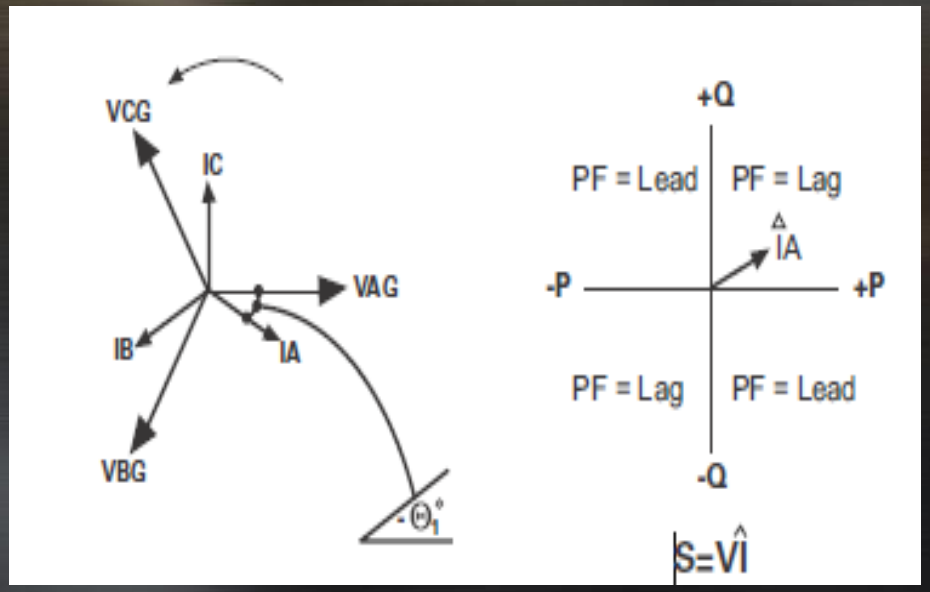

Directional Time Over-Current

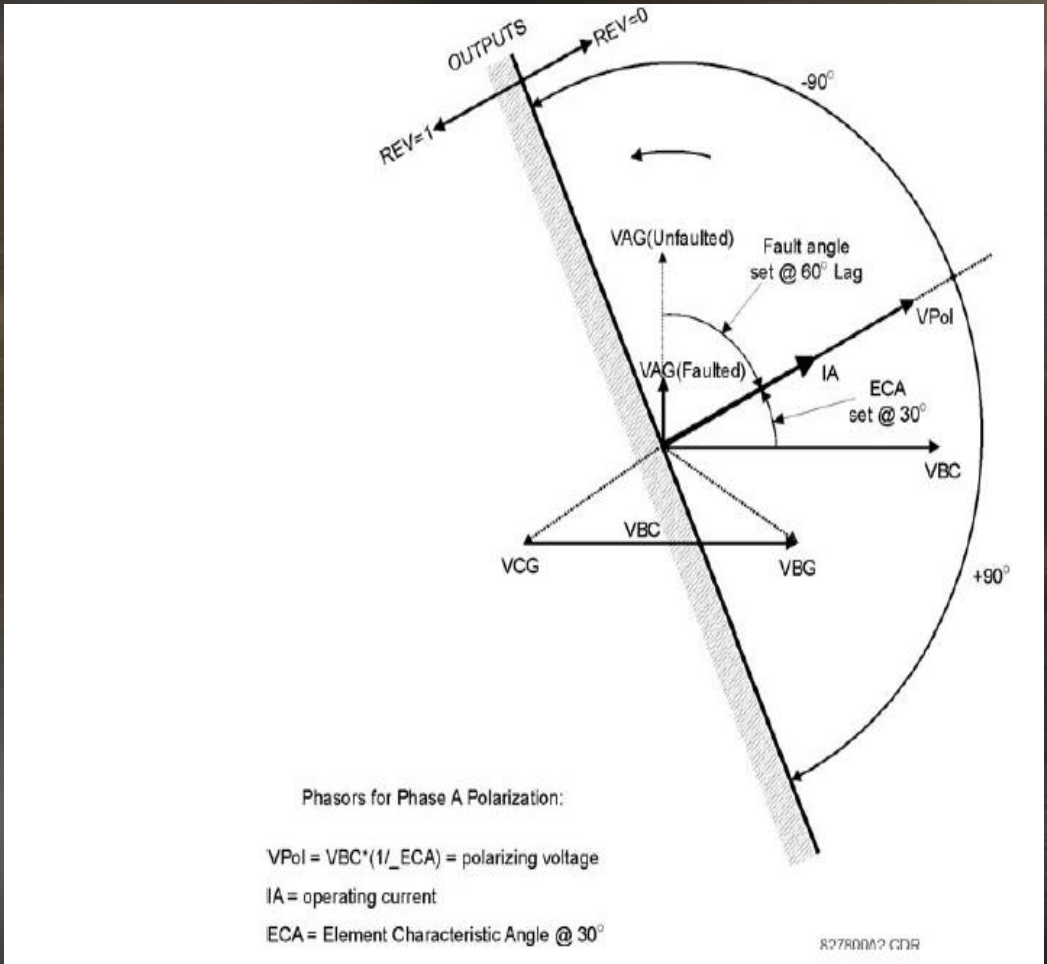

Directional Power

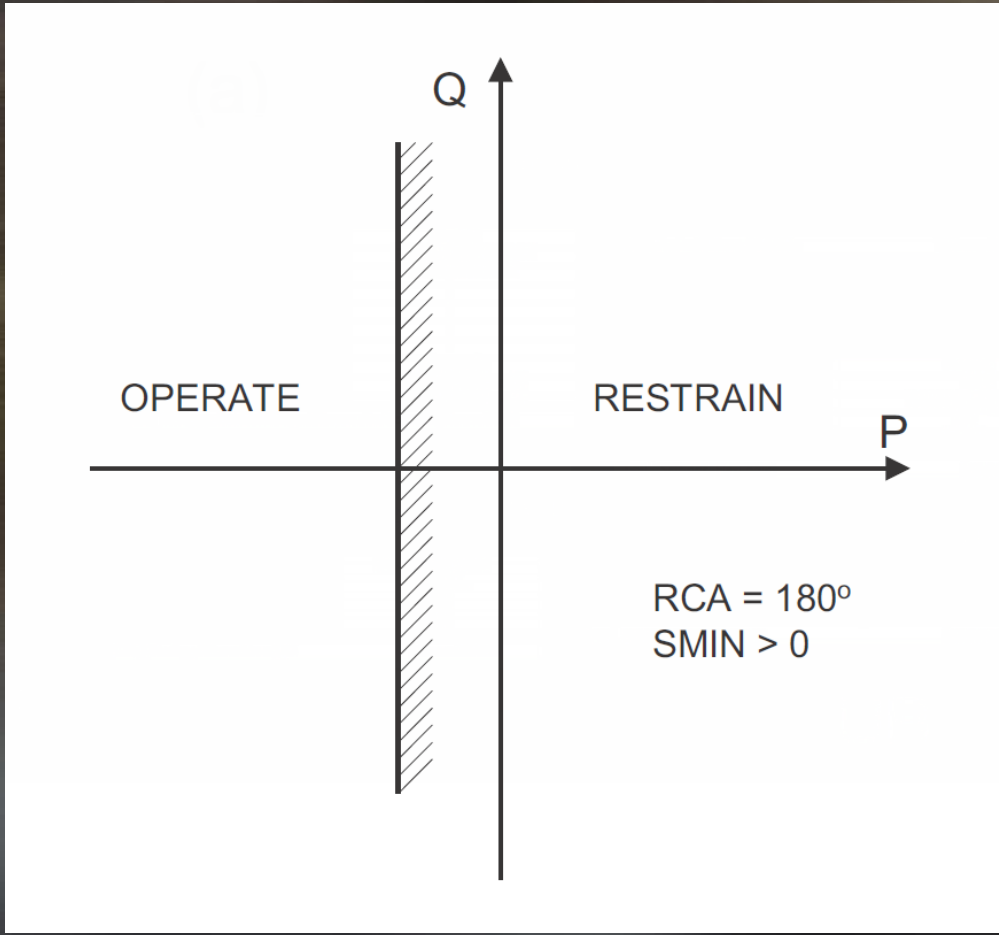

Under-Frequency Protection

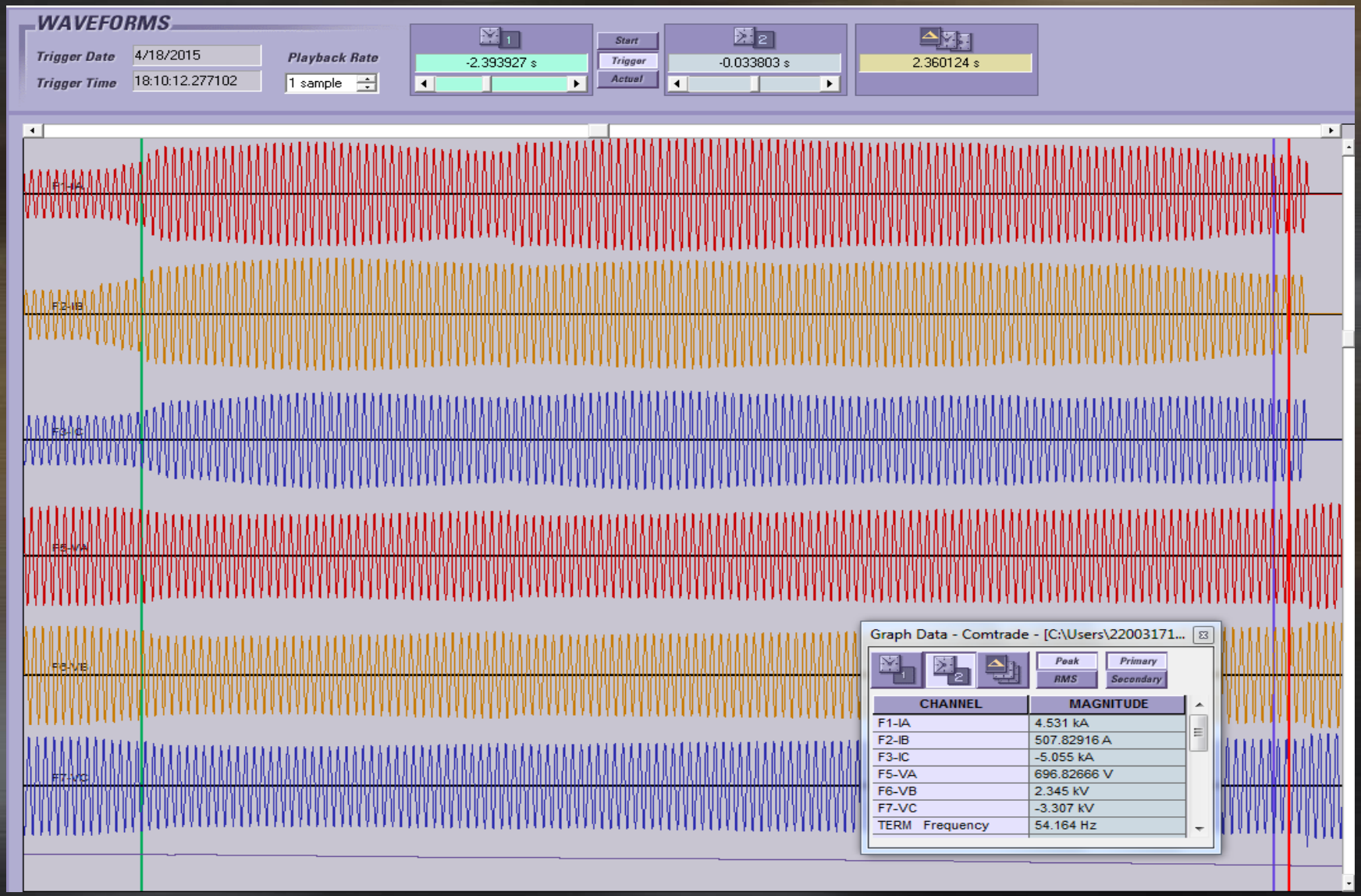

Generator Out-Of-Step

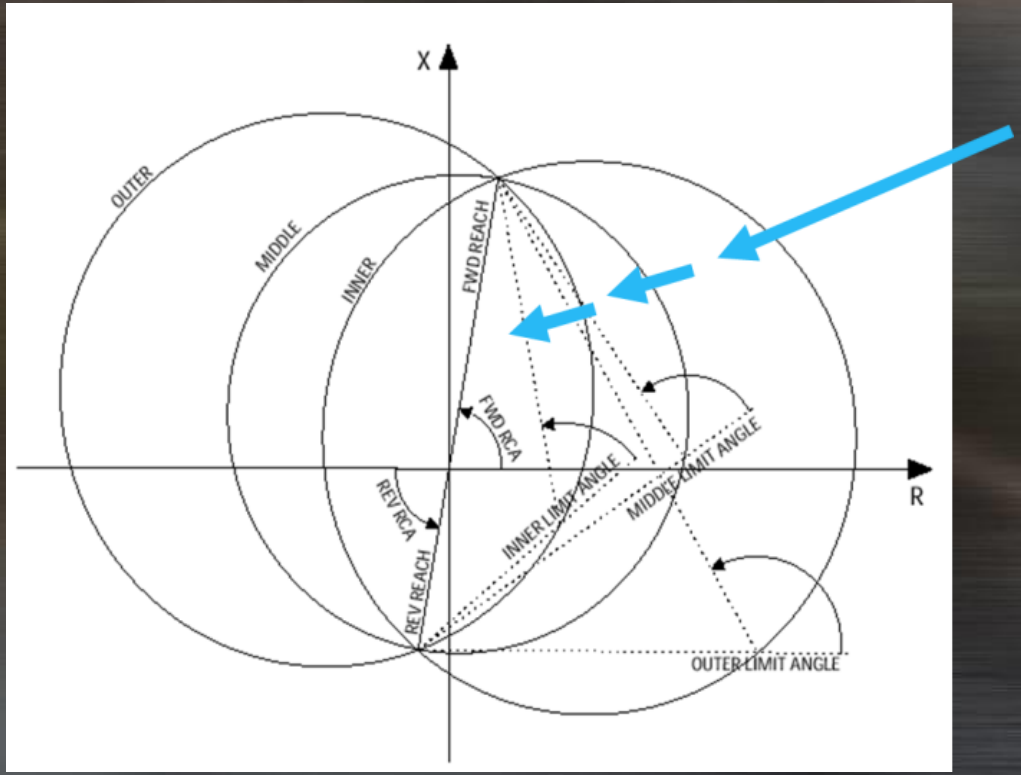

Generator Out-Of-Step

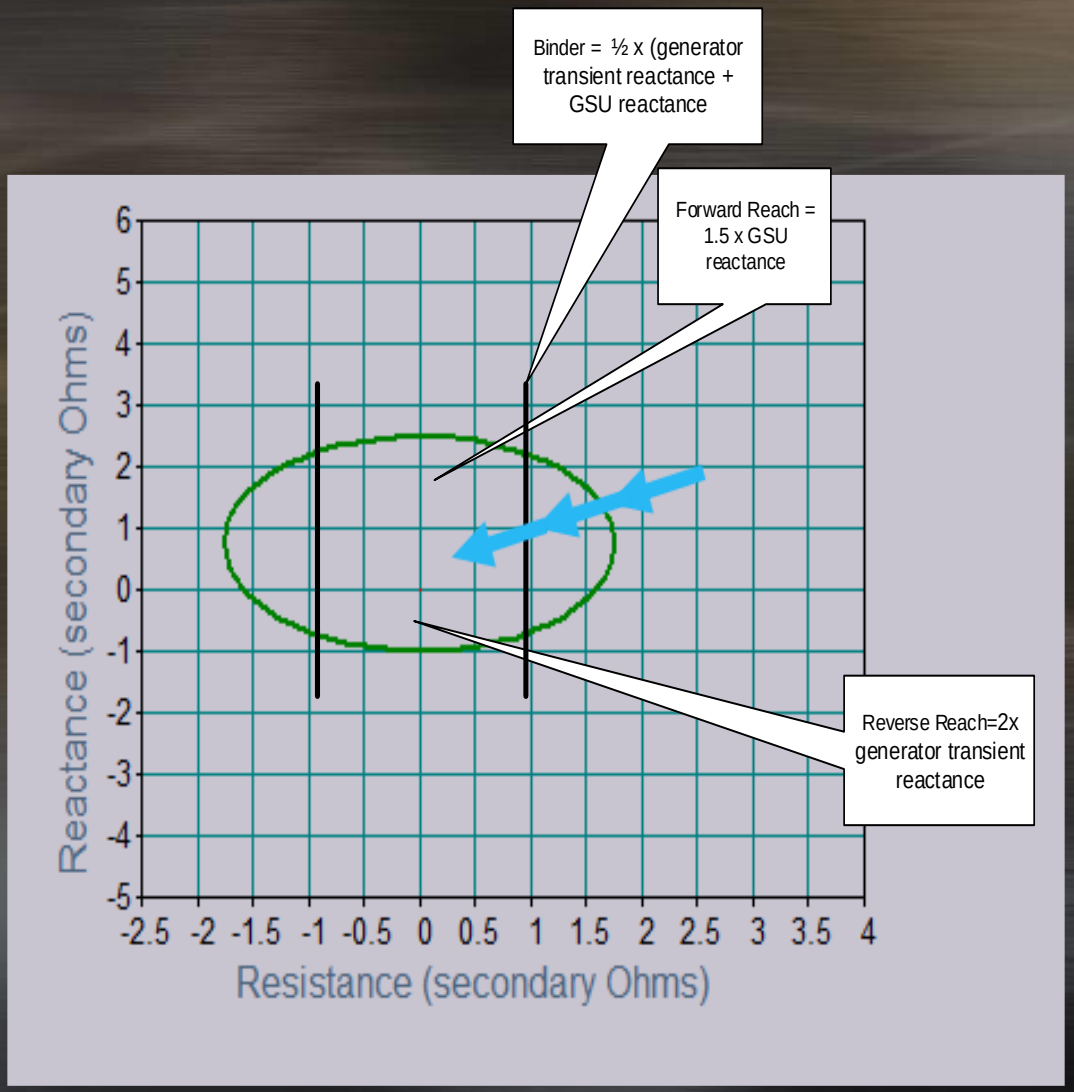

Facility Load Shedding

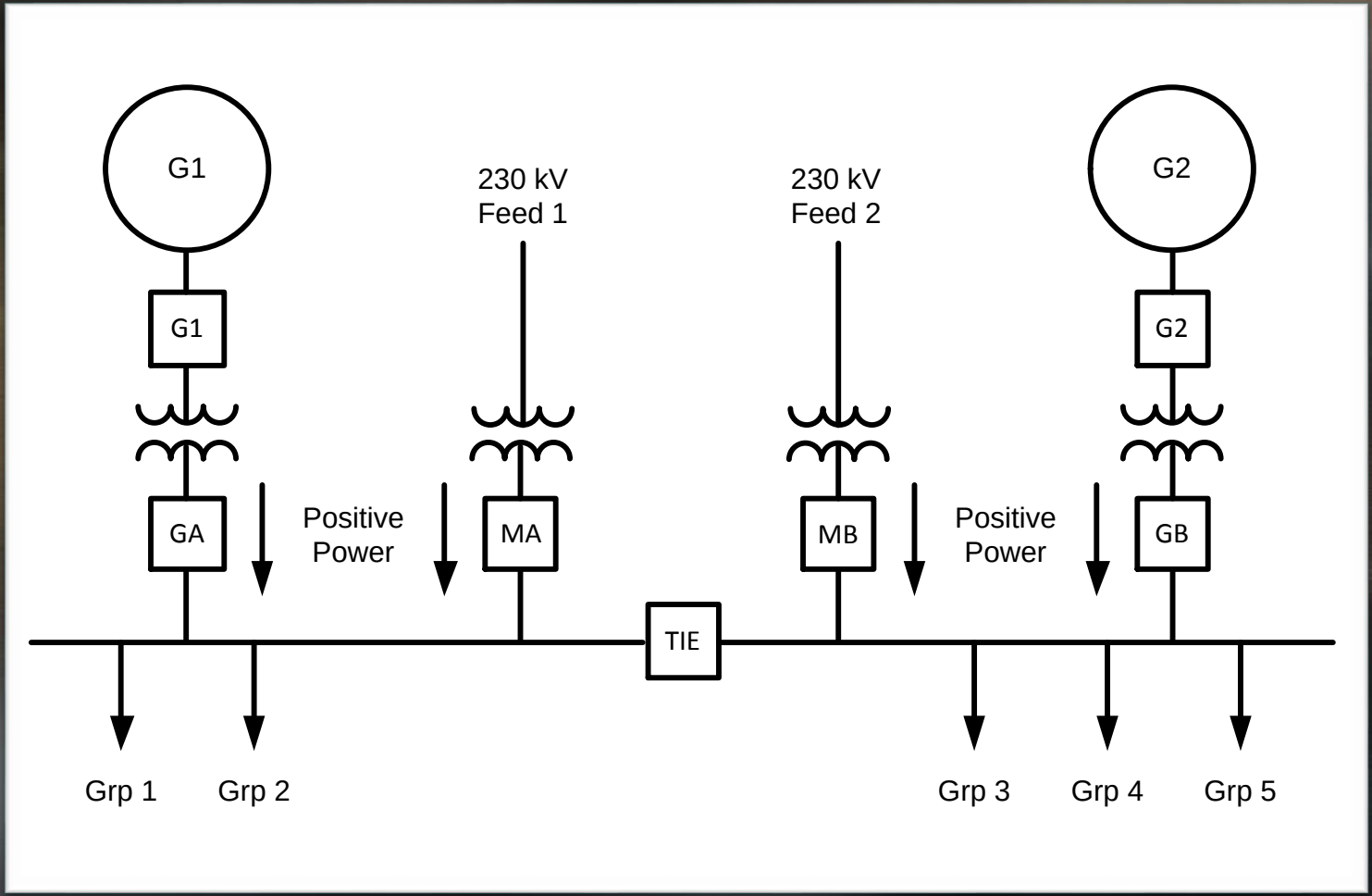

Other Considerations

- Auto-Reclose of Utility Breakers
- Sync Check supervision of utility tie breaker
- Sync Check supervision of utility line breakers

Conclusions

- If you have a generator, you don't have to lose the whole shooting match
- The intertie must be protected
- IEEE 1547 is a start to understand the protection
- Separation from the utility must occur for utility faults
- Once separation has occurred, you must ensure that you have adequate generation

Thank You

Questions?