Comparative Evaluation of Two Process Bus Solutions for a Distribution Substation

Arun Shrestha and Sathish Kumar Mutha, *Schweitzer Engineering Laboratories, Inc.*
Devika Kattula, Nathaniel McAfee, Rosa Vergara, Miles Webb, and Dr. Valentina Cecchi,
University of North Carolina at Charlotte

***Abstract*—This paper documents a collaboration between the University of North Carolina at Charlotte (UNCC), Schweitzer Engineering Laboratories, Inc. (SEL), and a utility in the United States to evaluate the cost, system reliability, and protection system performance of a traditional protection and control (P&C) substation design in comparison to two process bus solutions. The first process bus solution uses a simple point-to-point (P2P) architecture, in which a merging unit (MU) is directly connected to a relay using a fiber-optic cable. The second process bus solution is based on the IEC 61850 standard and uses switched network architecture to communicate between MUs and relays. These process bus solutions improve personnel safety and reduce substation construction costs and construction time. The utility plans to use the information from this case study to validate and justify the future use of process bus designs in greenfield and brownfield substations.**

I. Introduction

The utility partner in the United States that contributed to this case study owns and operates thousands of miles of transmission lines and hundreds of transmission and distribution stations in a few different states. Most of the utility's substations are traditional substations, i.e., they employ large amounts of copper cabling to exchange analog and binary signals between primary equipment and protection and control (P&C) devices. The traditional secondary system is costly and can expose workers in control houses to dangerous high-energy cables. According to [1], 75 percent of traditional P&C system installation cost in North America is related to labor. A traditional substation requires thousands of individual connections between P&C devices that must be terminated one by one by skilled workers [2].

In contrast, a modern substation employing a process bus solution uses fiber-optic cables to communicate between relays in the control house and merging units (MUs) in the switchyard. This solution eliminates copper cables between the primary equipment and the protective relays, replacing them with a few fiber-optic connections, which leads to lower substation construction costs, reduced construction time, and improved personnel safety.

Two types of process bus solutions are currently available. The first process bus solution [3] [4] uses a simple point-to-point (P2P) architecture in which an MU is directly connected to a relay using a fiber-optic cable. The second process bus solution implied in the IEC 61850 standard uses switched network architecture to communicate between MUs and relays. Because this process bus solution is based on IEC 61850, it allows for interoperability between devices from multiple manufacturers. Both solutions have their own merits and unique challenges. The utility is actively evaluating process bus solutions for their ability to improve personnel safety as well as reduce the time and cost required to design, construct, commission, and maintain P&C systems for its substations.

This paper describes how the University of North Carolina at Charlotte (UNCC), Schweitzer Engineering Laboratories, Inc. (SEL), and the utility partner collaborated to evaluate and compare the cost, protection scheme reliability, and protection system performance of traditional P&C substation design against the two process bus solutions. First, the utility shared all the relevant drawings from a recently completed distribution substation. Senior design students at UNCC and engineers at SEL reviewed the drawings to determine an estimated cost of the traditional copper hardwire P&C design and then compared it to the estimated cost of the same substation with a process bus design implemented. Next, the team used fault tree analysis to compare the reliability of the three P&C substation designs. Finally, the team compared the protection system performance between the traditional and two process bus P&C devices by running numerous tests on the actual devices.

The findings from this collaborative case study are described in detail in the next few sections of the paper. Section II provides a brief overview of the utility's distribution substation that was used for the study. Section III covers the details of the two process bus solutions. Section IV describes the paper-based redesign of the process bus P&C system for the distribution substation under study. Section V compares the cost, protection scheme reliability, and protection system performance between the traditional and two process bus solutions. Finally, concluding remarks are presented in Section VI.

II. Overview of the Utility's Distribution Substation

The distribution substation that was reviewed consists of two delta/wye-grounded step-down transformers that are individually tapped from the two 115 kV transmission lines that

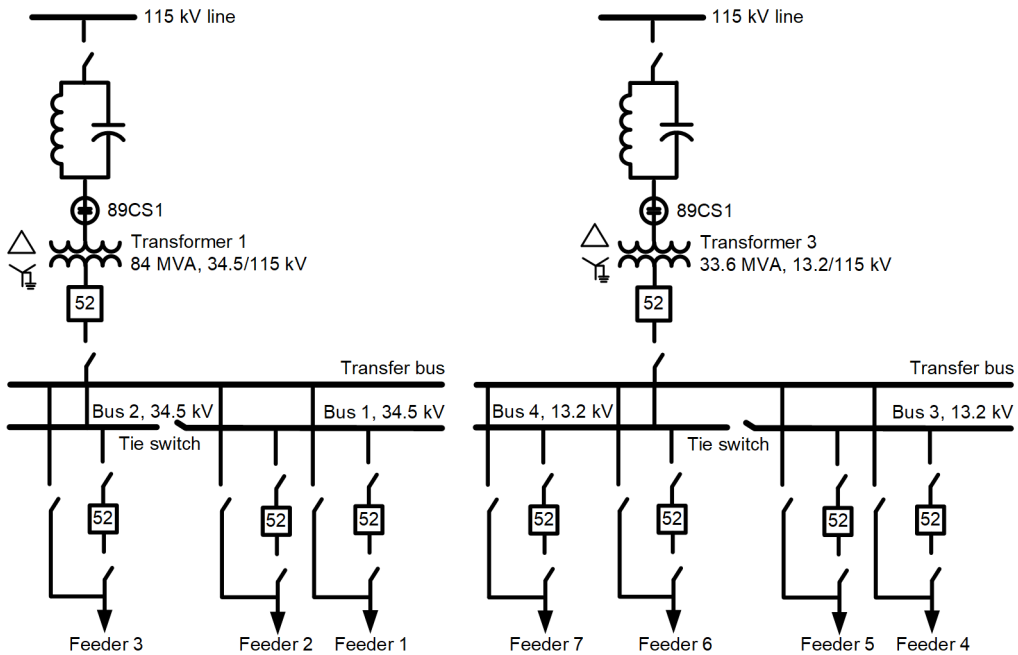

Fig. 1. Single-line diagram of the utility's distribution substation

pass by the substation, as shown in Fig. 1. The first transformer (84 MVA) steps down the voltage to 34.5 kV and feeds three distribution feeders. Similarly, the second transformer (33.6 MVA) steps down the voltage to 13.2 kV and feeds four distribution feeders. Circuit switchers (CSs) are installed at the high-voltage side of the transformers and circuit breakers (CBs) are installed at the low-voltage side for fault isolation.

Each transformer is protected with the utility's standard distribution protection scheme that consists of a transformer differential relay (87), a fault pressure relay (63), and a backup overcurrent relay with both instantaneous and inverse-time phase overcurrent elements (50/51P) and an inverse-time neutral or ground overcurrent element (51G). Each relay controls individual lockout relays. The transformer differential relay trips both the circuit switcher and the breaker. The backup overcurrent relay only trips the circuit switcher.

Each distribution bus is protected by a bus overcurrent relay, and each feeder is protected by an overcurrent relay. These relays have instantaneous and inverse-time phase overcurrent elements (50/51P) and instantaneous and inverse-time ground overcurrent elements (50/51G). The bus relay trips the transformer low-side breaker using a separate lockout relay. Each feeder relay controls its respective breaker. Although the bus relay has overcurrent elements that must coordinate with the feeder relays, high-speed bus fault detection and clearing is achieved with a reverse interlock scheme. If any feeder relay senses a fault, it sends a reverse interlock signal that blocks the high-speed elements from tripping in the bus relay.

III. Process Bus Solutions

Process bus solutions, if engineered and implemented correctly, reduce the time and cost needed to construct, install, and commission P&C systems. When a utility selects a process bus solution, it should carefully consider P&C system reliability, performance, and overall security. Although P&C devices for process bus solutions have been available in the market for some time, adoption is still in an early stage in North America. Each utility should consider the complexity of the new technology, testing and maintenance procedures, product reliability, availability of technical support, and workforce training requirements before choosing a process bus solution. The process bus solutions that were selected for the case study are detailed in the next two sections.

A. P2P-Based Process Bus Architecture

A P2P-based process bus solution uses the simplest and most secure P2P connection between two devices. Fig. 2 shows a substation with a P2P-based process bus solution where MUs communicate directly to intelligent electronic devices (IEDs).

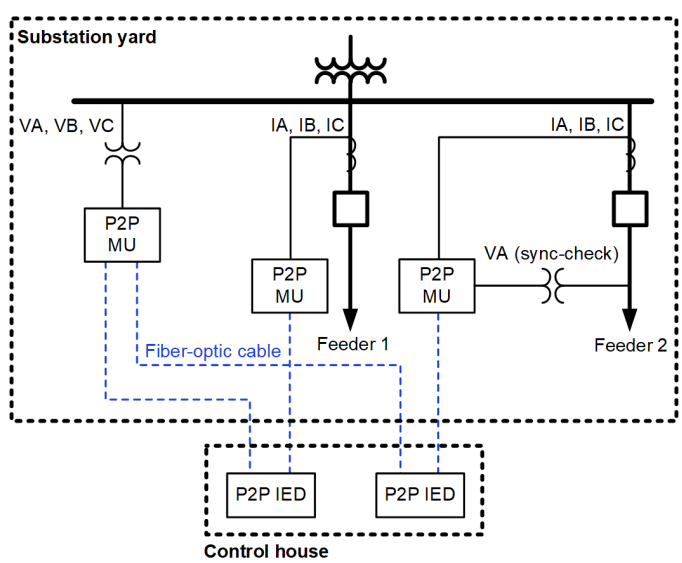

Fig. 2. P2P-based process bus architecture

In this process bus solution, data received from multiple MUs are time-aligned using an internal clock of the relay, thereby eliminating the need for an external time source. Because P2P-based process bus solutions do not require network switches and clocks for operation, they remove the complexity of configuring switches and clocks during the engineering phase. This simplifies the engineering labor required to set up the process bus solution. Having a lower device count in the substation results in increased system reliability at a lower cost.

The number of relays that an MU can communicate with and the number of MUs that a relay can communicate with are limited by the number of communication ports available. The P2P MU and the protective relay used for this case study have four and eight communication ports, respectively. The MU uses a manufacturer-specific protocol to communicate with the relays and exchanges process bus data at 10 kHz. The MU does not have any settings and uses one protocol to exchange both analog and binary signals with the relays.

B. IEC 61850-Based Process Bus Architecture

An IEC 61850-based process bus solution requires network switches and a dedicated time source for operation [5]. All protective relays and MUs are time-synchronized, either by directly connecting to an Ethernet network-based time distribution protocol, such as Precision Time Protocol (PTP), or by using a dedicated connection, such as IRIG-B, or by using both methods. The time source allows relays to correctly time-align data received from multiple MUs, accounting for sampling time variation and network delays, before passing the data to protection functions.

Fig. 3 shows a simplified network architecture for an IEC 61850-based process bus solution. Because protection functions depend on the time sources and the Ethernet network used, utilities should take great care when configuring devices and creating network engineering. The P&C devices in this process bus solution use the Sampled Values (SV) protocol for analog (voltage and current) signals, the Generic Object-Oriented Substation Event (GOOSE) protocol for digital signals, and PTP or IRIG-B protocols for time synchronization.

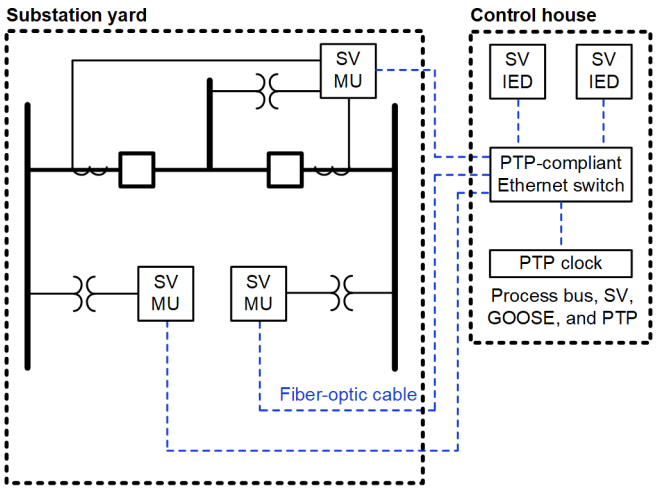

Fig. 3. IEC 61850-based process bus architecture

These devices are interoperable with IEC 61850-compatible devices from other manufacturers. When implementation of a standard in a P&C device is not uniform among manufacturers, it can lead to interoperability issues [6]. Therefore, utilities should take great care when mixing devices from multiple manufacturers in a process bus solution. One major benefit of this process bus solution is that data from an MU or a relay can be shared with multiple P&C devices without being limited by the number of communications ports available on the device.

IV. Process Bus Solution Design for the Utility's Distribution Substation

This section describes the two separate process bus solution designs for the distribution substation in the study. Although the design is carried out for the complete substation, for simplicity only the first transformer and its three feeders are described in detail. First, the secondary system and its associated P&C devices for the traditional substation are presented. Then, the details of the P2P- and IEC 61850-based process bus solutions for the same traditional substation are discussed.

A. Design for Traditional Substation

Fig. 4 shows the secondary connections between primary equipment (CSs, CBs, current transformers [CTs], and potential transformers [PTs]) and the protection IEDs for the portion of the substation associated with Transformer 1.

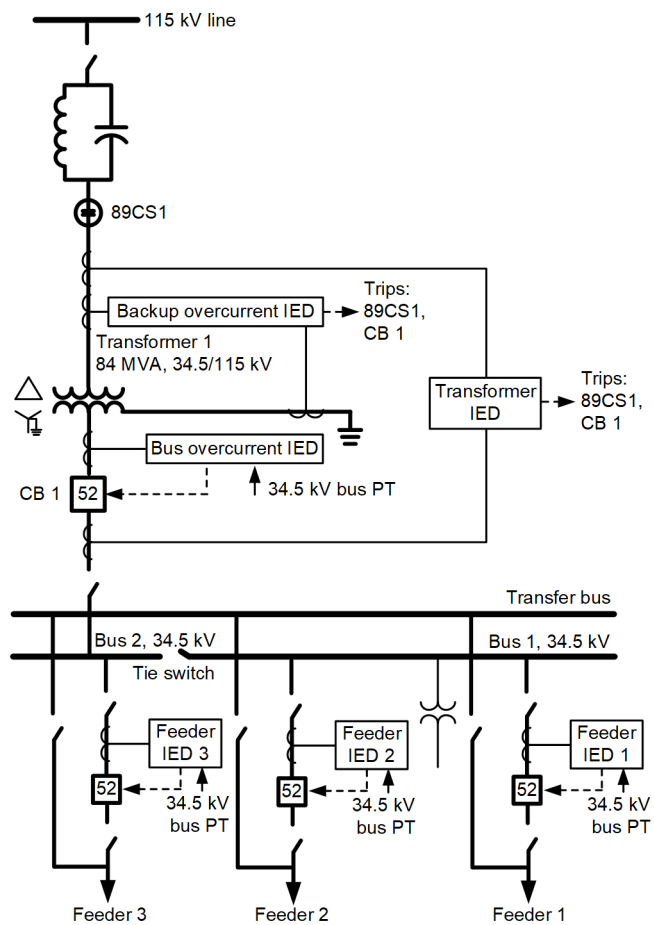

Fig. 4. Secondary connections of the distribution substation

Each IED uses a separate CT to measure the current. The 34.5 kV bus voltage measurement is supplied to each feeder IED and the bus overcurrent IED. The trip signals from each IED are also shown in the figure. The Transformer 1 subsystem consists of one transformer IED, one backup overcurrent IED, one bus overcurrent IED, and three feeder IEDs. The Transformer 2 subsystem consists of the same number of IEDs as the Transformer 1 subsystem, plus one extra feeder IED. The substation uses three different types of overcurrent IEDs.

B. Design for P2P-Based Process Bus Solution

The P2P-based process bus solution for the Transformer 1 subsystem is shown in Fig. 5. The subsystem requires eight P2P MUs and six protection IEDs. The MUs are installed in the switchyard close to the primary equipment, and the IEDs are installed in the control house. A direct fiber-optic cable connects an MU with an IED. The MU output contacts are used to trip the CS and CBs. Four MUs are used for the transformer: two at the high-voltage side and two at the low-voltage side. If there is an MU failure, the second MU trips the CS or CB. Two MUs at each side of the transformer replicate the trip functionality in the traditional substation. Unlike in the design for the traditional substation, an overcurrent IED type is used for the backup overcurrent IED, the bus overcurrent IED, and the feeder IEDs.

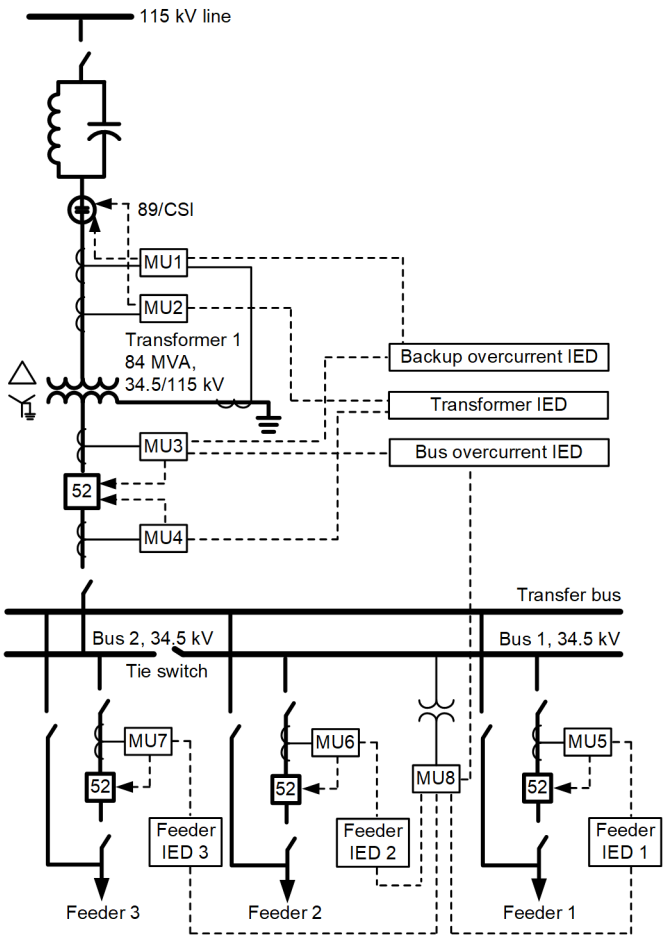

Fig. 5. P2P-based process bus solution connections for the distribution substation

The P2P-based process bus solution for the Transformer 2 subsystem consists of ten MUs, six overcurrent IEDs, and one transformer IED. This process bus solution is very simple and does not require any network switches or an external time source for running local protection functions.

C. Design for IEC 61850-Based Process Bus Solution

The connections between MUs, Ethernet switches (SWs), protection IEDs, and a satellite clock for the IEC 61850-based process bus solution are shown in Fig. 6. The MUs are installed in the yard next to the primary equipment, and the IEDs are installed in the control house. To minimize the possible impact of a network switch failure on the entire substation protection system, two Ethernet switches are used. Hence, each MU and IED requires two fiber-optic cables to connect to two switches.

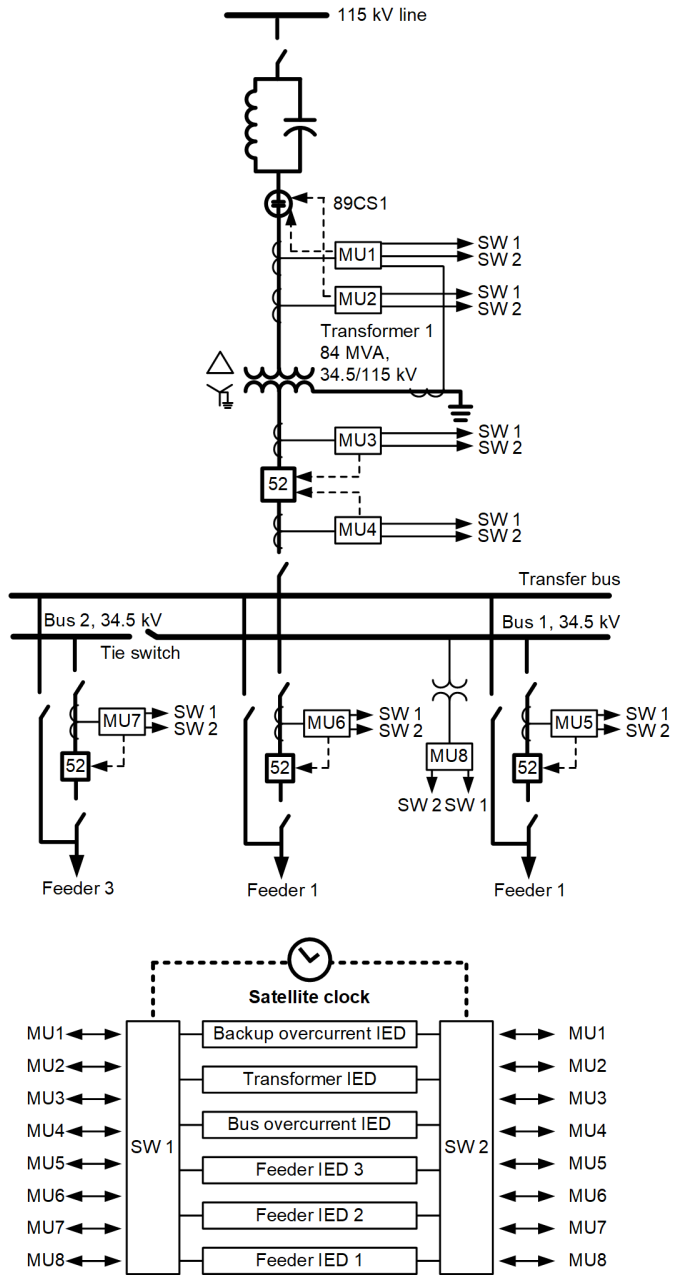

Fig. 6. IEC 61850-based process bus connections for the distribution substation

The Transformer 1 subsystem requires eight MUs, six protection IEDs, two switches, and one satellite clock. Nine MUs, seven protection IEDs, and two switches are needed for the Transformer 2 subsystem. The satellite clock is shared between the two subsystems. If redundancy for an external time source is required, a terrestrial time distribution system or a separate satellite clock can be installed [7]. Compared to the P2P-based solution, this solution requires additional fiber-optic cables, four network switches, one satellite clock, and one less MU.

V. Comparative Evaluations of the Traditional Substation and Two Process Bus Solutions

Now that the designs of the two process bus solutions have been presented, this paper compares these two solutions analytically with the traditional substation, using cost, protection scheme reliability, and protection system performance as criteria. The costs and the technical data described in this section are provided to help utilities currently in the decision-making process for selecting a process bus solution for a distribution substation of similar size.

A. Cost

For this case study, only the costs of P&C devices and secondary systems are considered. The labor costs, panel costs, and costs of installing cable trenches are not considered, as these figures are difficult to find and vary from one location to another. The protection IEDs installed in the utility's distribution substation are one generation old. Therefore, the cost of these IEDs is significantly lower than the cost of the P2P and IEC 61850 IEDs, which are the latest-generation IEDs from the manufacturer.

Table I shows the cost breakdown for the P&C devices in the traditional substation. The bulk of the cost for a traditional substation comes from copper cables. In a traditional substation, copper cables typically run from primary equipment in the substation yard to IEDs in a control house. The table includes the equipment that would be replaced when updating the substation to a process bus solution.

Table I
Cost Evaluation for Traditional Substation

Description	Units	Cost ($)
Copper cables	36,070 ft	85,018
Test switches	39	9,141
Fuses	24	94
Backup overcurrent IEDs	2	5,140
Transformer IEDs	2	11,980
Bus overcurrent IEDs	2	9,340
Feeder IEDs	7	17,990
Lockout IEDs	6	6,408
Total cost of traditional substation equipment		145,111

The cost breakdowns of the P2P-and IEC 61850-based process bus solutions for the distribution substation are shown in Table II and Table III, respectively. The overall cost of each process bus solution is higher than the installation cost of the traditional system. The increase in cost can be explained by the addition of MUs and the latest generation protection IEDs for process bus solutions. According to [1], 75 percent of traditional P&C system installation cost in North America is related to labor. Although the P&C cost for process bus solutions is slightly higher, significant time and cost savings are expected due to reductions in space requirements, labor costs, and system maintenance.

Table II
Cost Evaluation for P2P-Based Process Bus Solution

Description	Units	Cost ($)
Fiber-optic cables	8,400 ft	8,424
Merging units	18	52,380
Overcurrent IEDs	11	73,150
Transformer IEDs	2	18,340
Total cost of P2P-based solution equipment		152,294

Table III
Cost Evaluation for IEC 61850-Based Process Bus Solution

Description	Units	Cost ($)
Fiber-optic cables	12,160 ft	13,858
Merging units	17	84,490
Overcurrent IEDs	11	66,000
Transformer IEDs	2	17,460
Ethernet switches	4	15,540
Satellite clock	1	2,540
GNSS antenna	1	260
Total cost of IEC 61850-based solution equipment		200,148

When the P2P- and IEC 61850-based solutions are compared, the P2P-based solution is more economical. This is because the P2P-based process bus solution does not require network switches and a satellite clock. This simple solution also does not require any network engineering. Because minimal training is required to maintain and troubleshoot this solution, personnel costs are lower as well.

B. Protection Scheme Reliability

Protection engineers frequently use fault tree analysis to compare the relative reliability of various protection schemes. Fault tree analysis helps quantify system reliability through the laws of probability theory. Unavailability is the fraction of time in which a device cannot perform. Hence, higher unavailability results in lower system reliability. A fault tree consists of a top event, which is the failure of interest, and basic events, which are related to the top event and typically expressed with a logic

gate. Each basic event has a value of unavailability that can be found using (1).

$$q \cong \lambda T = \frac{T}{MTBF} \tag{1}$$

where:

q is the unavailability value.

λ is some constant failure rate.

T is the average downtime per failure.

MTBF is the mean time between failures (λ^{-1}).

The reliability of the utility's traditional substation is compared against the reliability of two process bus solutions for two top events, as described in [8]. The MTBF value and unavailability for each component used in the fault tree analysis is listed in Table IV. For calculating the unavailability from the MTBF value, this paper uses the average downtime per failure of two days. The calculation assumes human failures take one year to detect and repair and are 100 times less likely than hardware failure. For product misapplication due to human error, unavailability is determined by multiplying the hardware MTBF by 100 and taking an inverse. In the table, the MTBF value for traditional IEDs is higher than the MTBF values for the P2P and IEC 61850 MU and IEDs. This is because the installation base of traditional IEDs is high; these IEDs have been in the market for decades. With time, the MTBF values for P2P and IEC 61850 MUs and IEDs, as well as the MTBF values for other components, are expected to rise.

TABLE IV
UNAVAILABILITY FOR EACH COMPONENT

Component	MTBF (Years)	Unavailability (10^{-6})
Traditional IED	1,200	4.57
P2P MU and IED	600	9.13
IEC 61850 MU and IED	600	9.13
Ethernet switch	300	18.26
Satellite clock	1,000	5.48
GNSS antenna	1,000	9.13
Fiber-optic cable	5,000	1.10
Copper wiring	10,000	0.55
Circuit breaker	NA	300
DC power system	NA	50
Current transformer (per phase)	NA	10
Voltage transformer (per phase)	NA	10

From these values, the top event unavailability is determined using mathematical logic gate operations. The unavailability of an event represented by an OR gate is the sum of the device unavailability values, while an AND gate is the product of the device unavailability values. The first top event that was explored for the traditional substation and both process bus solutions was the feeder IED failing to clear the fault in the prescribed time. This failure occurs if the breaker, CT, PT, dc power system, wiring, or IEDs fail. The fault tree for the traditional substation is shown in Fig. 7. Fig. 8 shows the fault tree for the same top event for P2P-based substations.

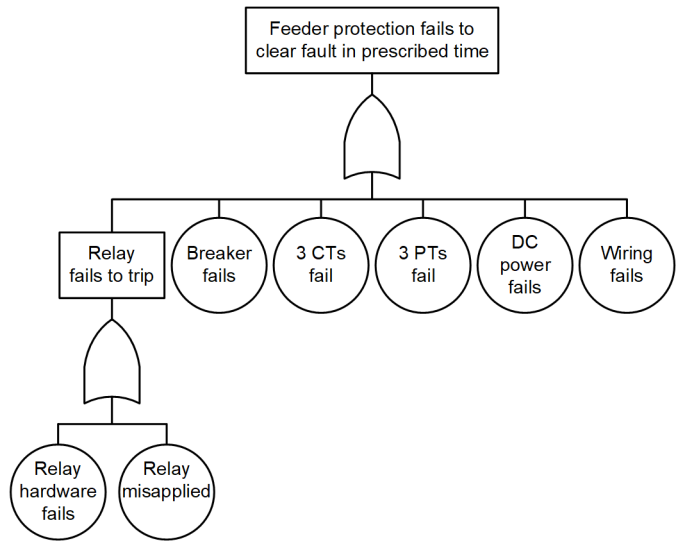

Fig. 7. Fault tree for feeder protection in traditional substation

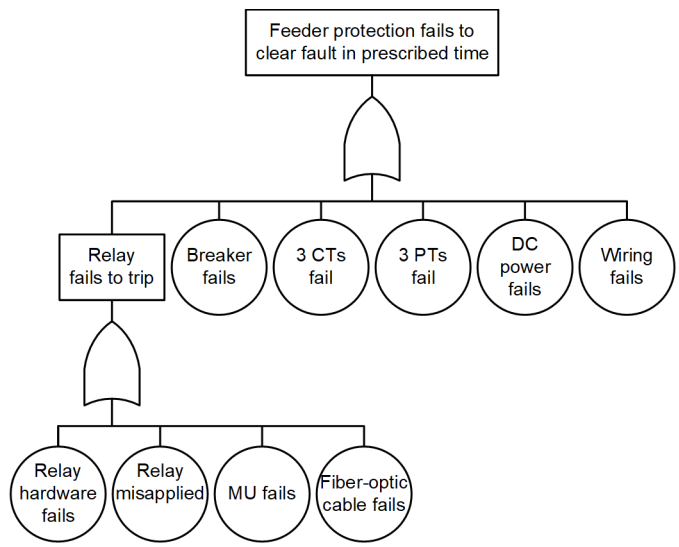

Fig. 8. Fault tree for feeder protection in P2P-based substation

Fig. 9 shows the fault tree for the same top event for IEC 61850-based substations.

The overall unavailability for each solution is shown in Table V. For feeder protection, the overall unavailability for the traditional substation is the lowest, followed in order by the P2P- and IEC 61850-based substations. This is expected, because IEC 61850-based substations require additional components to detect and clear faults. Unavailability can be improved by selecting high-quality components with high MTBF values, by designing simpler systems, or by adding redundancy. Redundancy improves reliability but increases complexity [9].

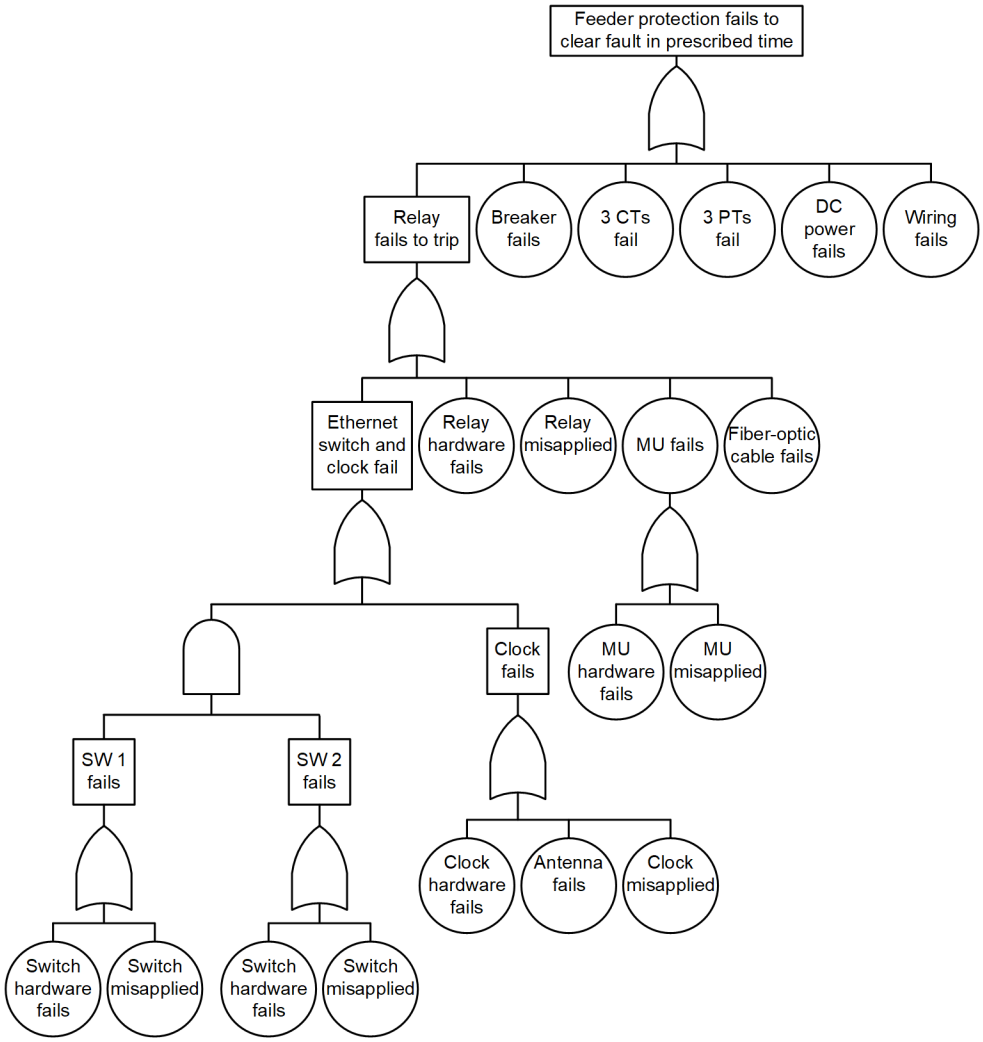

Fig. 9. Fault tree for feeder protection in IEC 61850-based substation

TABLE V
OVERALL UNAVAILABILITY (10^{-6})

Solution	Feeder Protection	Transformer Protection
Traditional substation	423.45	440.55
P2P-based substation	446.58	440.55
IEC 61850-based substation	487.86	465.17

C. *Protection System Performance*

In a traditional substation, protection IEDs are directly wired to the CTs, PTs, and CBs. There are no delays associated with fault detection and the transfer of trip signals to the CB. This is not the case for P2P- and IEC 61850-based process bus substations. MUs are installed in the yard close to the primary equipment, acting as interfaces between the protection IEDs and the primary equipment. Because each MU is connected between the protection IED and the primary equipment, there is a finite delay for fault detection and another delay for the transfer of trip signals. If these delays are significant, they can adversely impact protection system performance.

Fig. 10 shows the test setup that was developed for the study to compare the protection system performance of all three solutions. A simple power system consisting of a step-down transformer and a feeder is modeled in a real-time digital simulator. Low-level signals from the simulator are connected to an amplifier. The amplifier is connected to the traditional IED, P2P MU, and IEC 61850 MU to provide feeder voltage and current signals from the simulation. The outputs from the traditional IED, P2P MU, and IEC 61850 MU are connected to the simulator to provide the trip signal. All three relays are configured with the same protection settings.

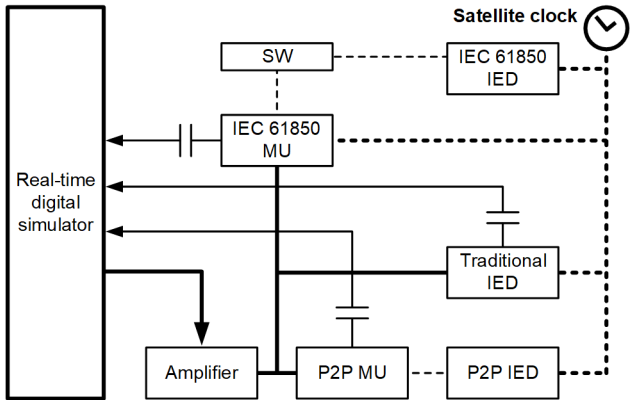

Fig. 10. Test setup developed to compare protection system performance

First, the IED response to high fault current was tested using the instantaneous overcurrent element (50P1). Fig. 11 shows the time-aligned event reports from three IEDs following a fault. The current waveforms for the P2P and IEC 61850 IEDs lag behind the waveform for the traditional relay. This delay is set in the IEDs to account for MU sampling time and the network delay associated with transfer of data from the MU to the IED. For the P2P IED, the delay is fixed at 1 ms; for the IEC 61850 IED, it is a user-configurable setting with a default value of 1.5 ms. As expected, the traditional relay response to the fault was the fastest, followed by the responses from the P2P and IEC 61850 IEDs, respectively.

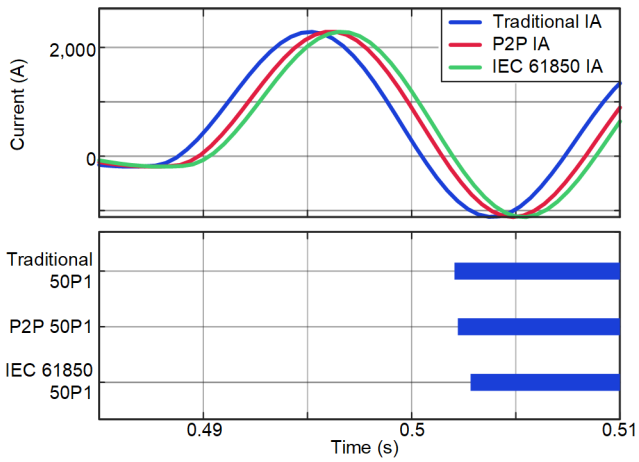

Fig. 11. 50P1 element operation time

Next, the study measured the round-trip time, i.e., the time difference between the fault initiation and the assertion of the trip signal in the real-time digital simulator. The trip signals from the P2P and IEC 61850 IEDs travel through the MU before asserting binary inputs in the simulator. The round-trip time includes the delay from the MU to the IED for analog signals and the delay from the IED to the MU for transmitting trip signals. Fig. 12 shows the average round-trip time for 50 strong faults that resulted in the assertion of the 50P1 element in all three IEDs. The slight variation in the round-trip time is due to the periodical nature of the test conducted and the processing intervals of the IEDs.

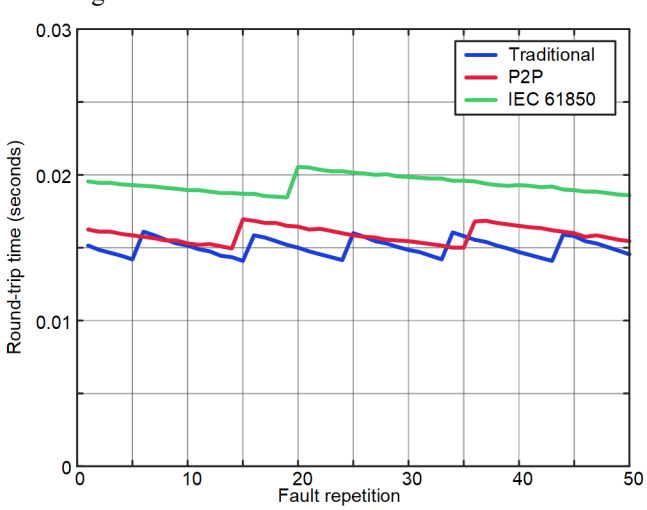

Fig. 12. Round-trip time for three different solutions

Table VI shows the average round-trip time for 50 faults for 50P and 51P protection elements. As expected, the traditional system was the fastest to respond to faults. The P2P-based system performance lagged slightly less than 1 ms compared to the traditional system. The response of the P2P-based system proves that this process bus solution is designed with a focus on simplicity and speed. The IEC 61850-based system response has a delay of roughly 4 ms. This delay can increase for a poorly engineered IEC 61850 network [6].

TABLE VI
AVERAGE ROUND-TRIP TIME (MS)

Solution	50P Element	51P Element
Traditional system	15.038	476.62
P2P-based system	15.913	477.30
IEC 61850-based system	19.347	480.15

D. *Other Factors*

When considering a process bus solution, utilities should consider not only installation and commissioning aspects, but also the operation and maintenance of the system. These new solutions include new engineering complexity to understand, as well as new risks associated with the technology. When complexity is not fully understood, it can impact the reliability and maintainability of the system. For example, traditional lockout relays and test switches are not used in the process bus solutions; therefore, the protection philosophy needs to be updated for the absence of lockout relays. Traditional IEDs are typically tested by opening test switches and injecting secondary signals, so traditional IED testing procedures need to be updated after a process bus solution is implemented. Similarly, workforce training is required to operate, maintain, test, and troubleshoot process bus solutions. Utilities should consider all of these factors thoroughly before selecting a process bus solution to fit their needs.

VI. CONCLUSION

Process bus solutions, if engineered and implemented correctly, improve personnel safety and reduce substation construction time and costs. When selecting a process bus solution, utilities should carefully consider P&C system reliability, performance, and overall security. This paper showed how two process bus solutions could be compared analytically with the traditional substation solution using cost, protection scheme reliability, and protection system performance as criteria.

The utility partner plans to use the information from this case study to validate and justify the future use of process bus designs in greenfield and brownfield substations. This research will allow the utility to better understand the benefits and challenges of each process bus design and improve them for future applications. The utility partner will be supporting a second senior design project that explores the benefits of a process bus system in a transmission substation.

VII. References

[1] R. Hunt, "Process Bus: A Practical Approach," *PACWorld Magazine,* Spring 2009, pp. 54–59.

[2] J. M. Byerly, "AEP and Process Bus: Balancing Business Goals and Choosing the Right Technical Solutions," proceedings of the 42nd Annual Western Protective Relay Conference, Spokane, WA, October 2015.

[3] Schweitzer Engineering Laboratories, Inc., "Digital Secondary Systems," August 2021. Available: selinc.com/products/distribution/protection/digital-secondary-systems/.

[4] B. Kasztenny, D. McGinn, W. Ang, R. Mao, D. Baigent, N. Nazir, S. Hodder, and J. Mazareeuw, "An Architecture and System for IEC 61850 Process Bus," GE Digital Energy Protection and Control Journal, pp.19–29, October 2008.

[5] IEC 61850-9-2, *Communication Networks and Systems for Power Utility Automation - Part 9-2: Specific communication service mapping (SCSM) - Sampled values over ISO/IEC 8802-3*, 2011.

[6] A. Shrestha, M. Silveira, J. Yellajosula, and S. K. Mutha, "Understanding the Impacts of Time Synchronization and Network Issues on Protection in Digital Secondary Systems," proceedings of the 8th Annual PAC World Americas Conference, August 2021.

[7] K. Fodero, C. Huntley, and P. Robertson, "Secure and Reliable GPS-Based Time Distribution," *Wide-Area Protection and Control Systems: A Collection of Technical Papers Representing Modern Solutions*, 2017.

[8] E. O. Schweitzer, III, B. Fleming, T. J. Lee, and P. M. Anderson, "Reliability Analysis of Transmission Protection Using Fault Tree Methods," proceedings of the 24th Annual Western Protective Relay Conference, Spokane, WA, October 1997.

[9] E. O. Schweitzer, III, and D. E. Whitehead, "Resetting Protection System Complexity," proceedings of the 46th Annual Western Protective Relay Conference, Spokane, WA, October 2019.

VIII. Biographies

Arun Shrestha received his BSEE from the Institute of Engineering, Tribhuvan University, Nepal, in 2005, and his MS and PhD in electrical engineering from the University of North Carolina at Charlotte in 2009 and 2016, respectively. He joined Schweitzer Engineering Laboratories, Inc. (SEL) in 2011 as an associate power engineer in research and development. He is presently working as a development lead engineer. His research areas of interest include power system protection and control design, real-time power system modeling and simulation, wide-area protection and control, power system stability, and digital substations. He is a senior member of IEEE and is a registered Professional Engineer. He is a member of IEEE PSRC and a U.S. representative to IEC 61850 TC 57 WG 10.

Sathish Kumar Mutha received his MS degree in electrical engineering in 2020 from the University of North Carolina at Charlotte. Prior to earning his MS degree, he worked as a power plant operation engineer in India. He joined Schweitzer Engineering Laboratories, Inc. (SEL) in 2019 as an engineer intern. He is currently a power engineer at SEL.

Devika Kattula is a recent alumna of the University of North Carolina at Charlotte. Her degree is in electrical engineering, and her interests are in power and energy systems.

Nathaniel McAfee recently graduated from the University of North Carolina at Charlotte. He received a BS in electrical engineering, and his interests primarily focus on renewable energy and microelectronics.

Rosa Vergara is a recent graduate of the University of North Carolina at Charlotte, with a degree in computer engineering. She is currently working on getting a MS in computer engineering. She has interests in embedded systems and machine learning.

Miles Webb is a recent alumnus of the University of North Carolina at Charlotte. His degree is in electrical engineering, and he is currently working full time as a product engineer for network cable at CommScope.

Dr. Valentina Cecchi received her BS, MS, and PhD degrees in electrical engineering from Drexel University in Philadelphia, Pennsylvania in 2005, 2007, and 2010, respectively. She is currently an associate professor and the graduate program director in the electrical and computer engineering department at the University of North Carolina at Charlotte, where she also leads the power delivery innovation research group and is an associate of the energy production and infrastructure center. Her research focuses on electric power delivery systems modeling and analysis, operation optimization, and distribution automation. She is a senior member of the IEEE and serves in the power and energy education committee of IEEE Power and Energy Society (PES).

20211021 • TP7012-01