Types of System Oscillations and Their Detection - Concepts and Applications

Jason Byerly – American Electric Power

Zhiying Zhang - GE Grid Solutions

Mark Adamiak - Adamiak Consulting

Introduction

Oscillations in power system exist - caused by the interaction of different power system components with each other, usually happening after system disturbances and system re-configuration.

Due to the electromechanical make-up of the grid, oscillations have existed from the beginning of power system time…this is changing

In the beginning, the primary source of oscillations was machine-to-machine hunting – resulting in what is known today as Inter-Area Oscillations.

As the power system has grown and expanded into new realms with a heavy presence of power electronics, the sources and frequencies of oscillations have expanded and has been classified by NERC as Forced Oscillations.

Content

- Oscillation Definition – Mark Adamiak – Adamiak Consulting LLC
- Sources and Ranges of Oscillations
- Detection and Quantification of Oscillations
- Synchro Oscillation Angle
- Application of Oscillation Detection
- AEP field oscillation cases – Jason Byerly - AEP
- Conclusions

Oscillation Definition

Oscillations can be characterized by:

- Frequency
- Magnitude
- Synchro Angle
- Damping constant

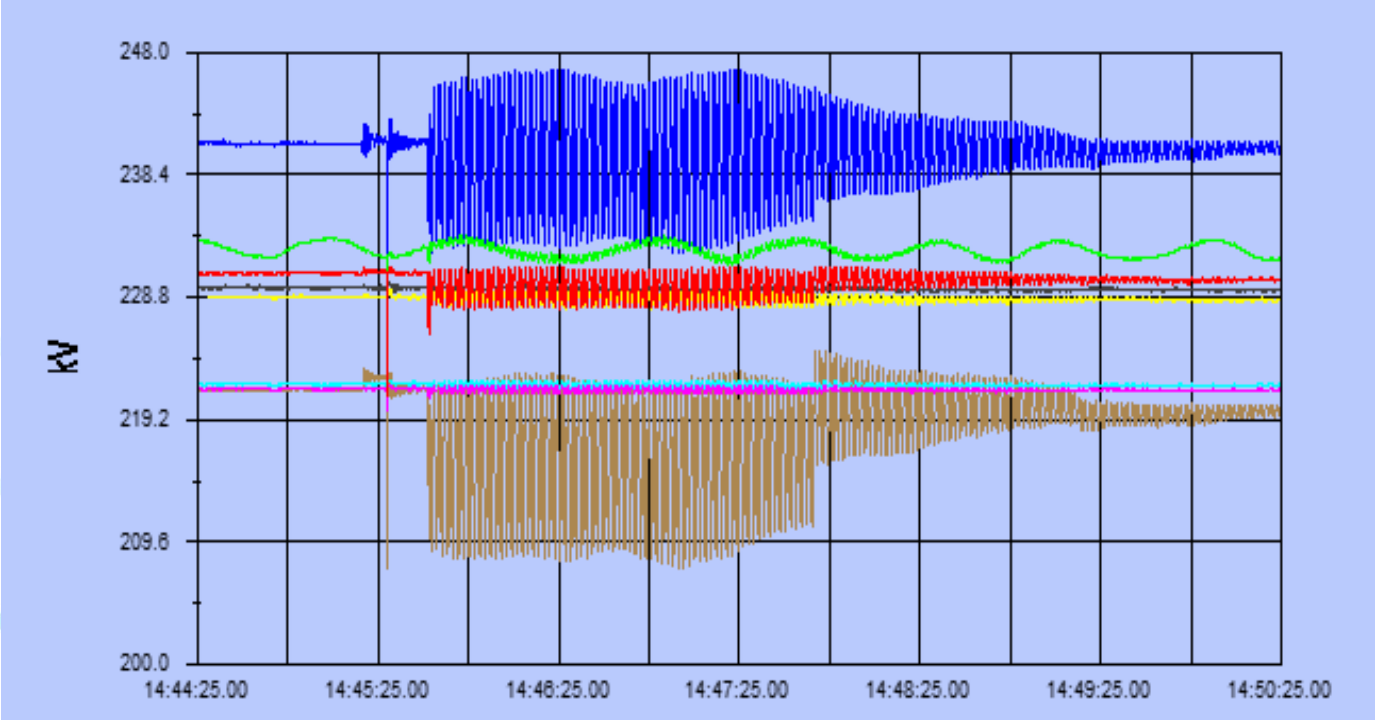

Oscillation Definition

Oscillation Characteristics - Damping

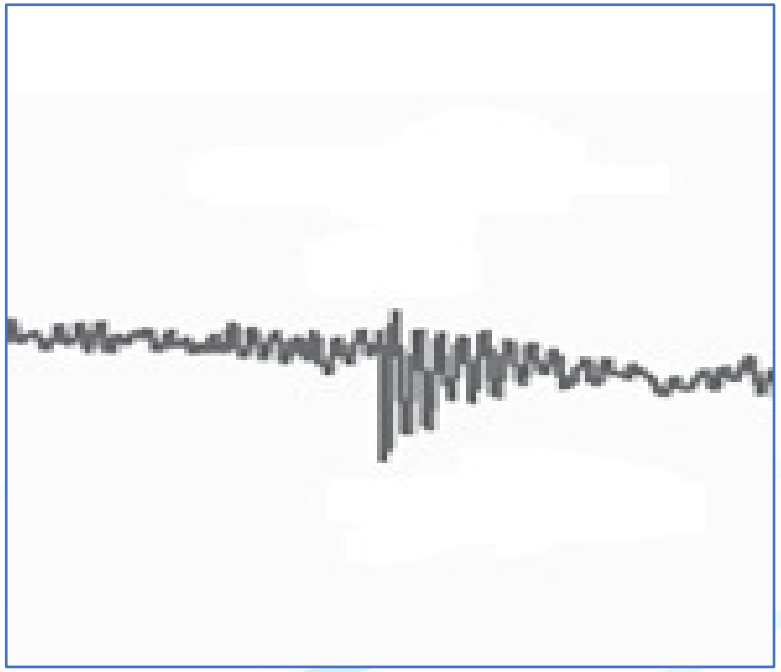

Positive Damping

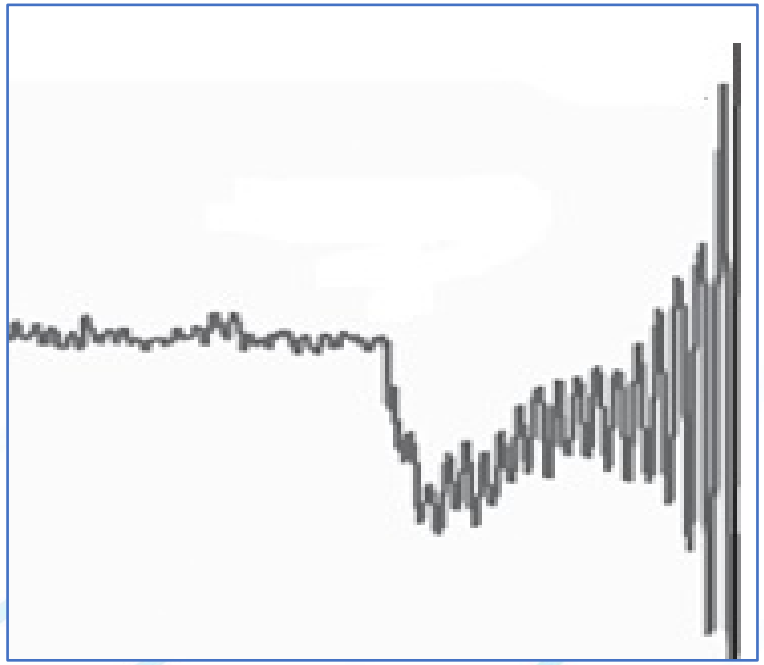

Negative Damping

Sources and Ranges of Oscillations

- Local plant mode oscillations - some generators are oscillating against the rest of the power system. Characteristic frequency of 1-2Hz

- Inter-area mode oscillations - generators in the one part of the system are oscillating against generators in another part of the system. Characteristic frequency of 0.1Hz to 1Hz.

- Torsional mode oscillations - interaction of the turbine-generator mechanical system, connected through the series-compensated line to the system. Characteristic frequency of 10Hz to 46Hz.

- Control mode oscillations - poorly tuned exciters, governors, HVDC converters, Static Var Compensators, large wind farm. Frequencies range from 1 to 15 Hz

Sources and Ranges of Oscillations

This translated into the need for the detection of following ranges:

1. DC to 0.01 Hz – this range is designed to capture the "almost" DC component of Geomagnetically Induced Currents (GIC).
2. 0.01Hz to 0.1Hz – this is the expanded GIC range
3. 0.1Hz to 1.0Hz – this range captures the inter-area oscillations
4. 1.0 to 10Hz – this is the "new" range identified by NERC as the Forced Oscillation1 range which captures most of the control mode oscillations
5. 10 Hz to 55 Hz – this range is known as the Sub Synchronous Oscillation range – typically resulting from resonance of series capacitors with the power system. Forced oscillations can also occur in this range.

Detection and Quantification of Oscillations

- Oscillations appear on the grid as a modulation of the fundamental frequency voltage and current signals.
- Synchrophasors – can be used for lower oscillation frequencies detection, has latency and filtering which may attenuate oscillation frequency.
- Direct protective relay input signals – RMS signals such as Voltage, Current, and Power for lower frequency signals and the signal sample data for the extraction of the higher-order frequencies from 10 to 55 Hz.
  - Digital filter bandpass filter can be applied to the sample data to remove the fundamental frequency component of the samples – leaving the raw oscillation signal.
  - Different signals can be used for oscillation detection; current, voltage, power, sequence components, etc.

Detection and Quantification of Oscillations

Oscillation Analysis Model

$$y(t) = \sqrt{2}A(1 + m \cdot e^{\sigma(t-t_0)} \cdot \sin(\omega_m(t - t_0)) \cdot u(t_0)) \cdot \sin(2\pi f_1 t)$$

Where:

A = Overall magnitude
m = magnitude of the oscillation
ω_m = frequency of the oscillation
f_1 = fundamental frequency
t_0 = start time of the oscillation
$u(t_0)$ = step function defining the start of the oscillation

Detection and Quantification of Oscillations

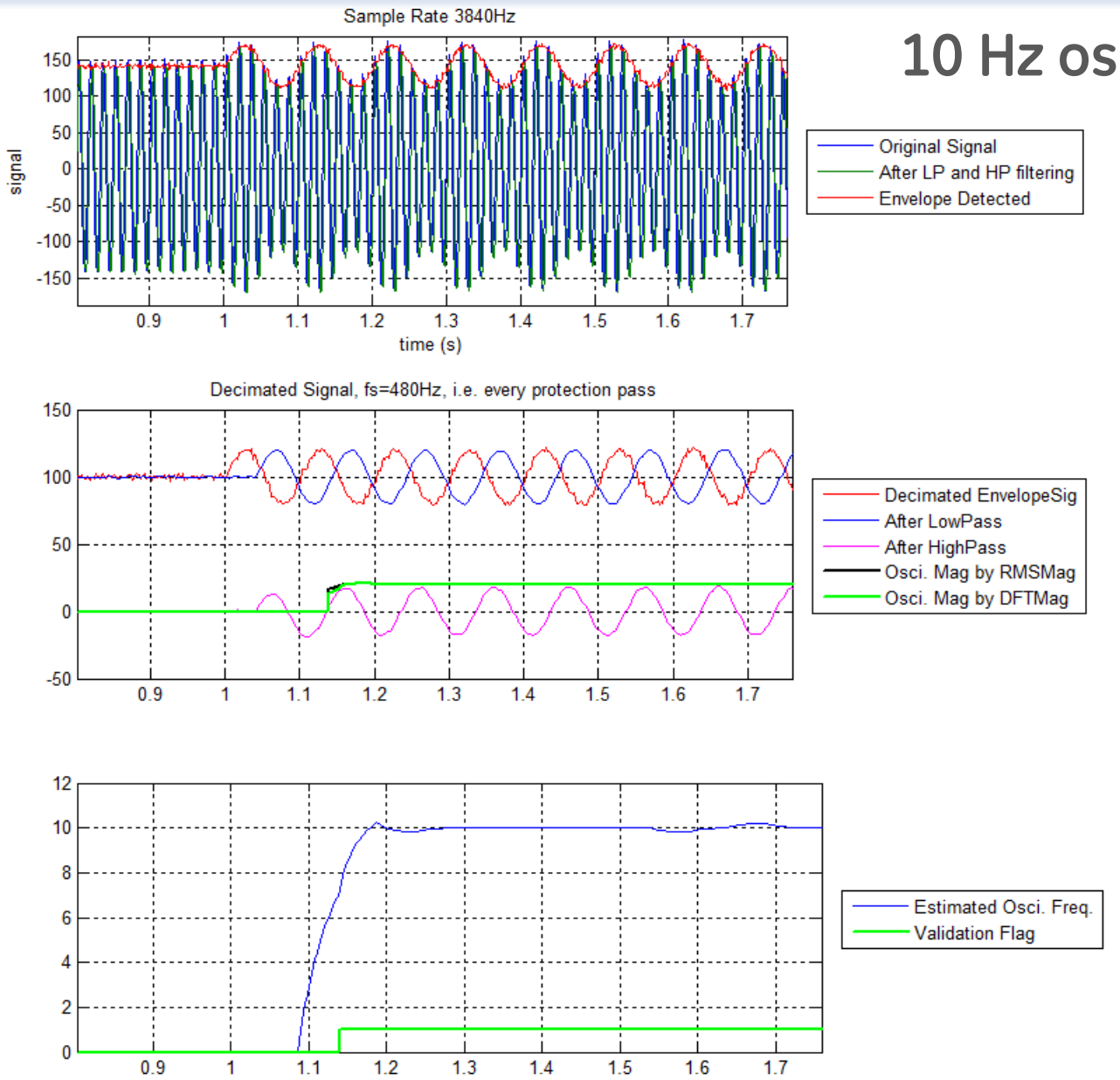

10 Hz oscillation frequency

Data to report:

- Frequency of oscillation
- Magnitude
- Damping
- Synchronous Angle

Detection and Quantification of Oscillations

Damping ratio of this oscillation signal is calculated: $$\xi = \frac{-\sigma}{\sqrt{\sigma^2 + \omega_m{}^2}}$$

When σ is a negative number, the damping ratio is positive which means that the oscillation is damped

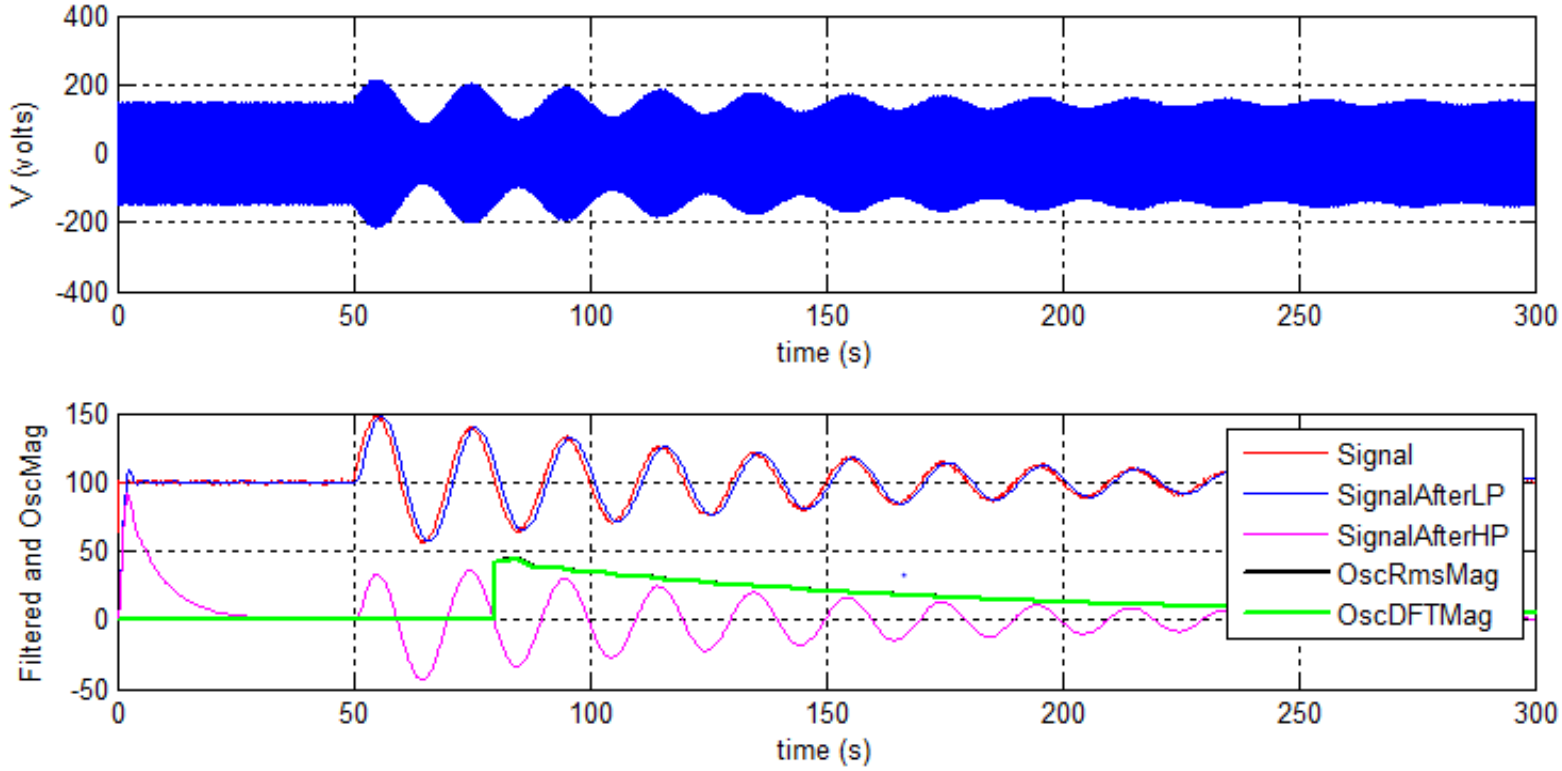

Positively damped 0.05Hz Oscillation

Synchro Oscillation Angle

- Oscillation signal has a Synchrophasor – which is the Magnitude and the Angle of the oscillation at the oscillation frequency.
- The Synchro Oscillation Angle can be visualized as the angle between a measurement at each power plant and some reference point

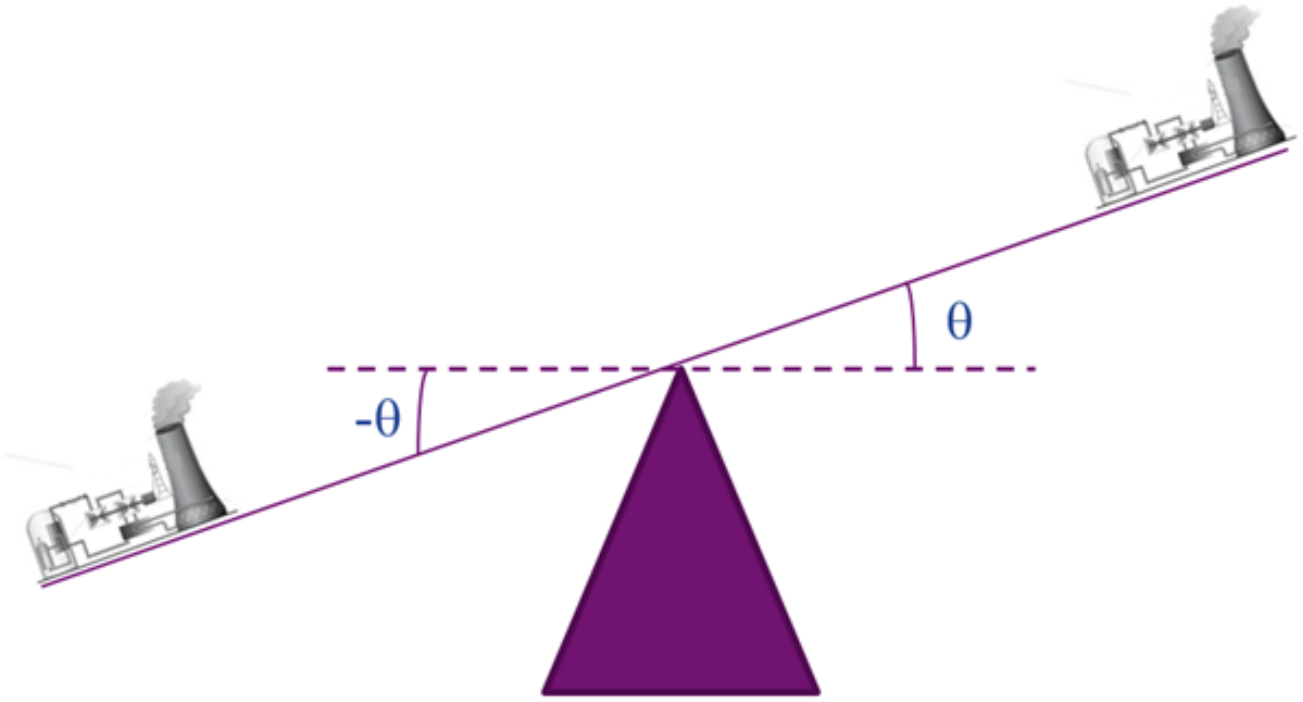

Detection and Quantification of Oscillations

SETTING	PARAMETER
MSOD 1 Function	Enabled
MSOD 1 FreqBand	BAND 4
MSOD 1 Source	SRC 1
MSOD 1 Input Signal Band 4	IA
MSOD 1 Low Freq Band 4	15.00 Hz
MSOD 1 High Freq Band 4	45.00 Hz
MSOD 1 Alarm Pickup	0.10 pu
MSOD 1 Trip Pickup	0.20 pu
MSOD 1 Deadband	0.02 pu
MSOD 1 Alarm Delay Band 4	0.10 sec
MSOD 1 Trip Delay Band 4	0.20 sec
MSOD 1 Damping Ratio Superv	Enabled
MSOD 1 Damping Ratio Level	0.1 pu
MSOD 1 Oscillation Phase Offset	0.0 deg
MSOD 1 Block	OFF
MSOD 1 Events	Disabled

To configure detector:

- Frequency band is selected
- Input signal is selected
- Maximum and minimum frequency within this band is selected.
- Alarm and trip pickup level and delays are selected.
- Oscillation damping supervision is optional
- Phase offset can be applied to calibrate inputs

Application of Oscillation Detection

- The detection of oscillation information can result in two responses: 1. Feed into situational awareness and 2. Take Remedial Action
- Oscillation information from different locations on the grid can be mapped into a SCADA system via protocols such as Modbus, DNP, and IEC 61850 (new models) and then mapped into Energy Management System displays as appropriate.
- Operator Action
- Many times, such as during an unstable oscillation, there is little time for the operator to act - automatic remedial action would prevent worsening situation.
- Example of this is forced oscillations (next slides) which occur in areas where there are high concentrations of inverter-based resources.

AEP field oscillation cases

Case #1

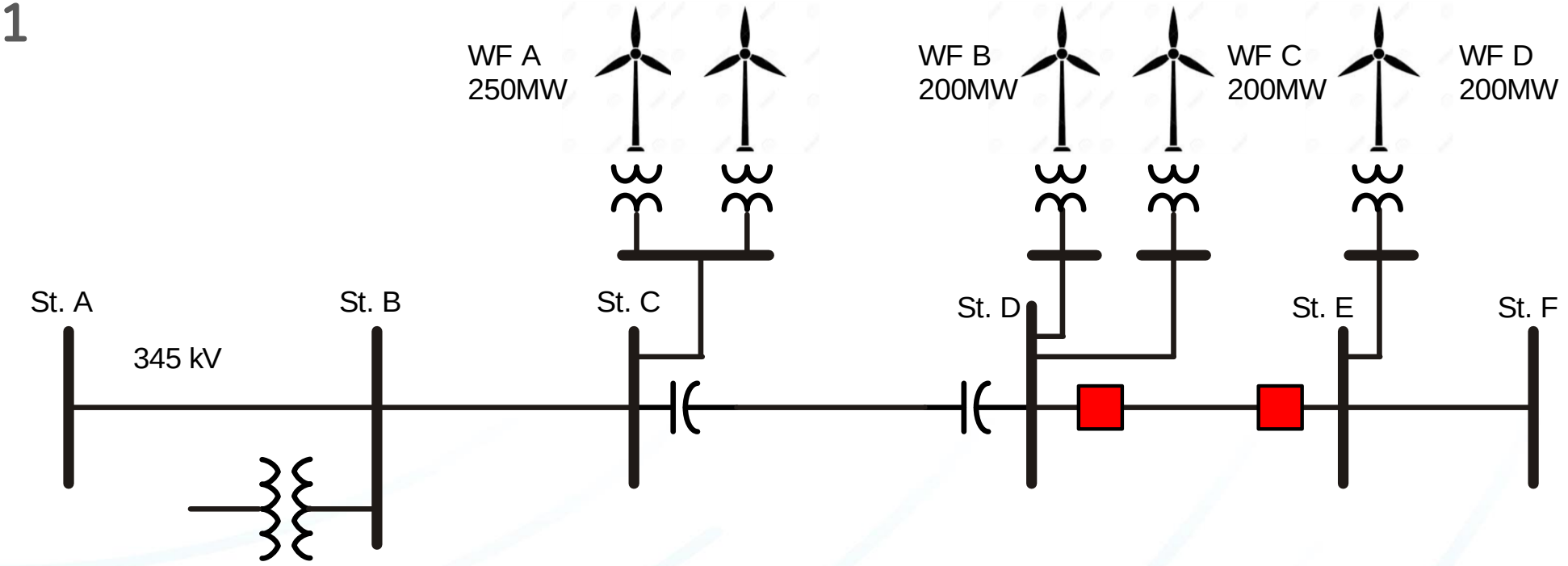

- DTT sent in error from station E to station D resulted in opening of the line D-E
- Windfarms WF B and WF C became connected through the station D to station C line in series with the in-service series capacitor banks.

AEP field oscillation cases

Case #1

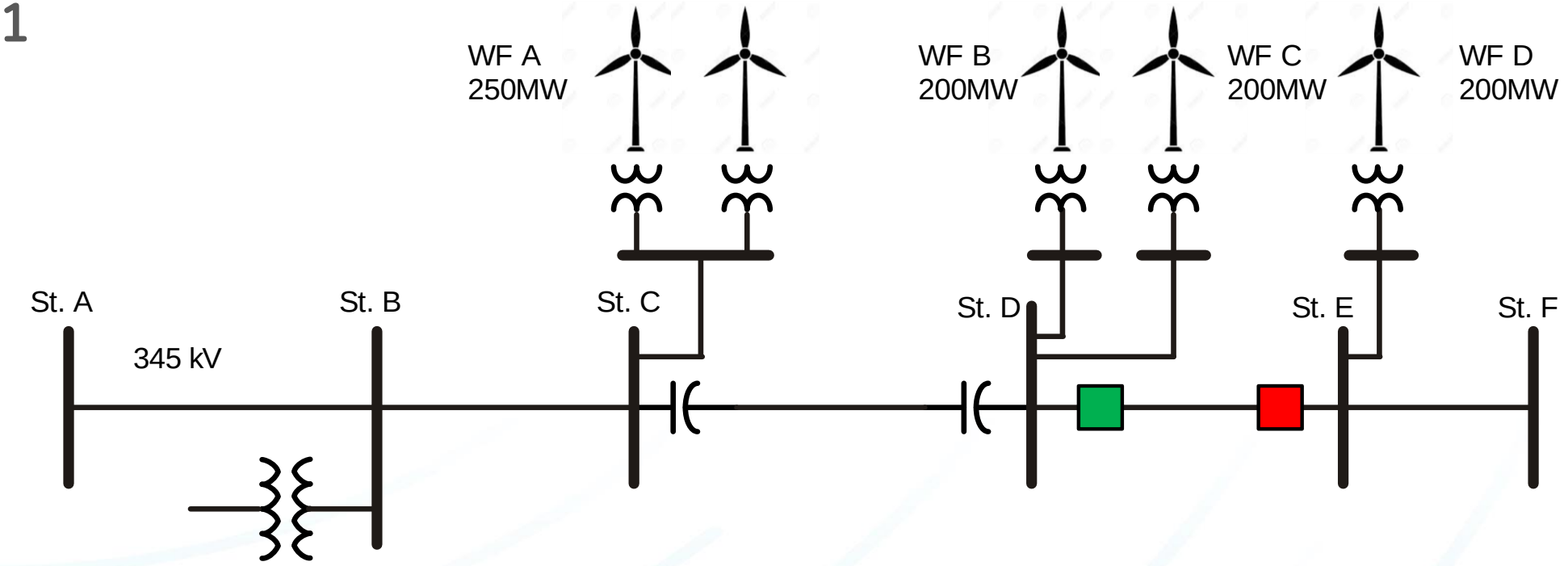

- DTT sent in error from station E to station D resulted in opening of the line D-E
- Windfarms WF B and WF C became connected through the station D to station C line in series with the in-service series capacitor banks.

AEP field oscillation cases

Case #1

Line currents 0.3s after line D-E trip

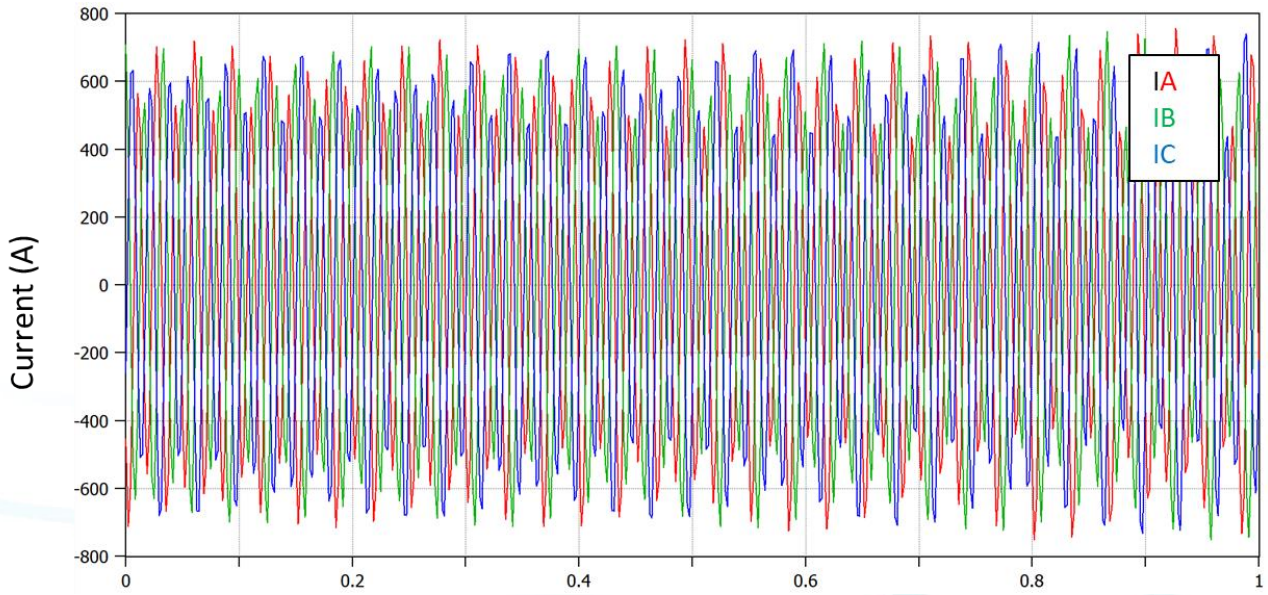

Raw IA signal and oscillation envelope of the signal

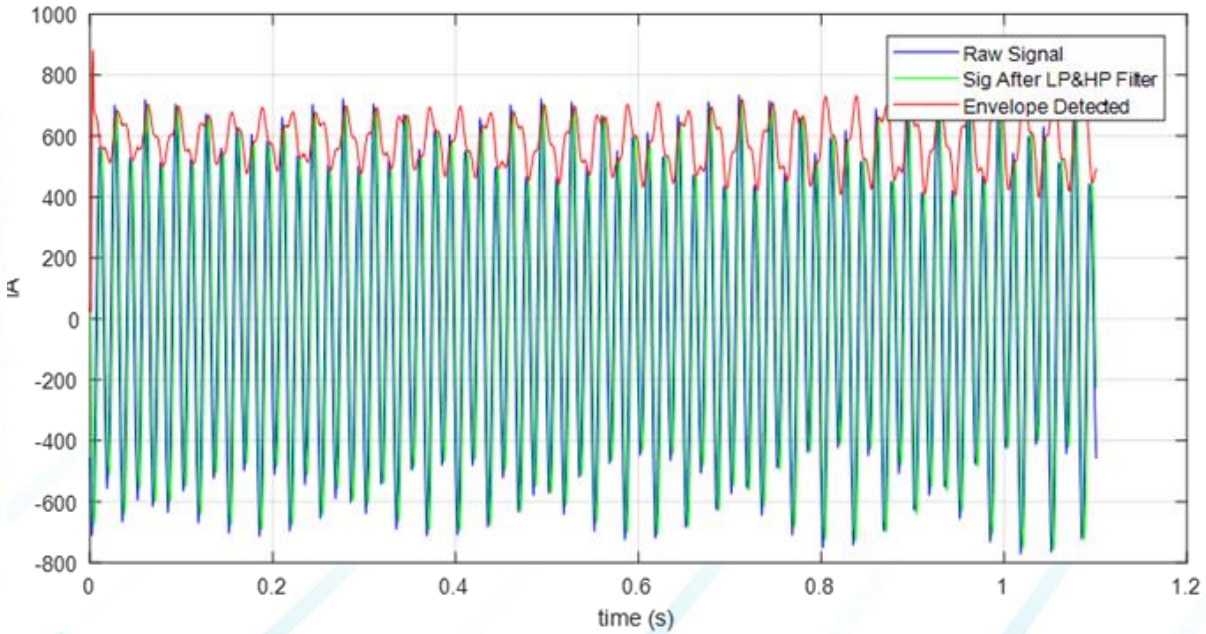

- Two seconds after opening of the line between the two stations due to the DTT, the series capacitors bypassed automatically on the protective trip of subsynchronous overcurrent function.

AEP field oscillation cases

Case #1

Filtered oscillation frequency from IA signal

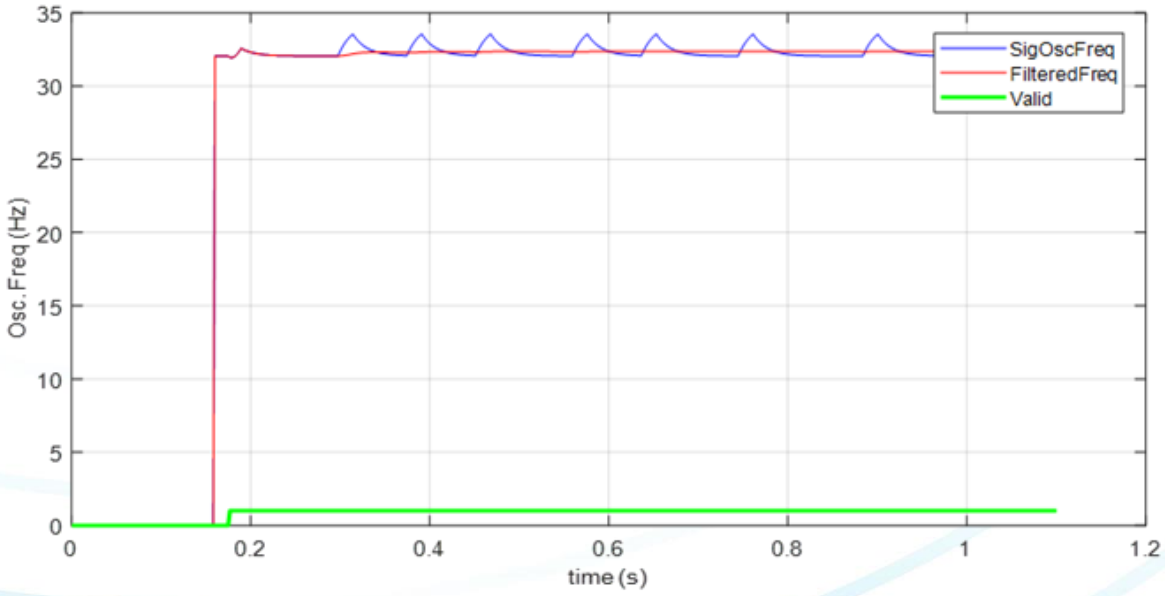

Measured damping ratio from IA signal

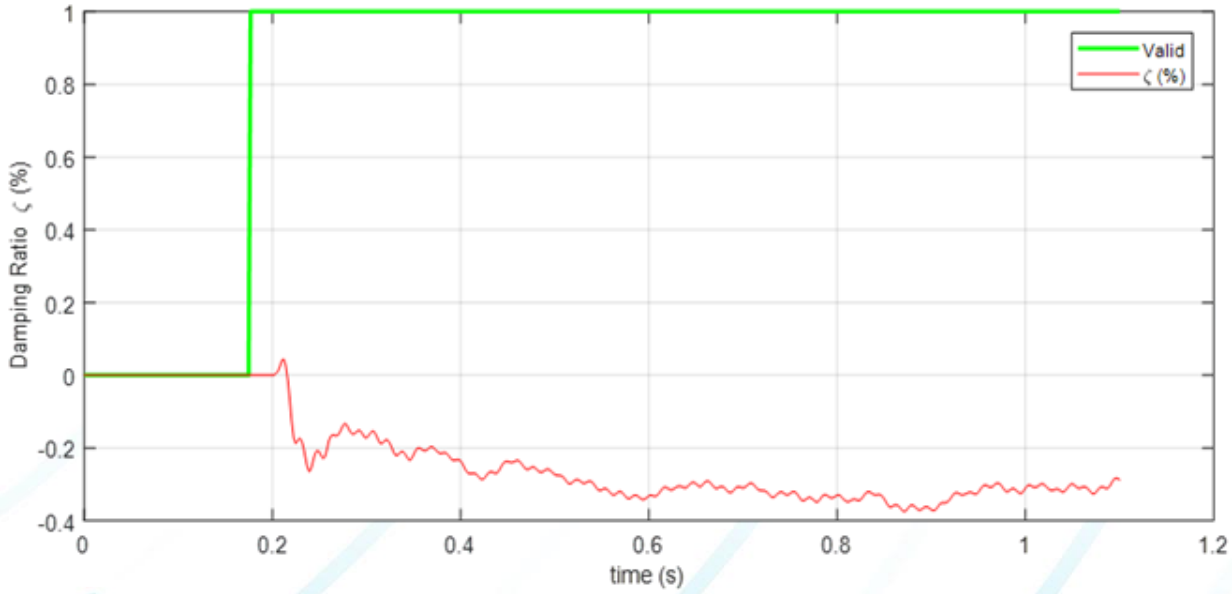

- Damping ratio is around -0.3%, i.e. negatively damped, indicating that the magnitude of the oscillation is increasing with time and action must be taken.

AEP field oscillation cases

Case #1

Line voltages after capacitors re-insertion

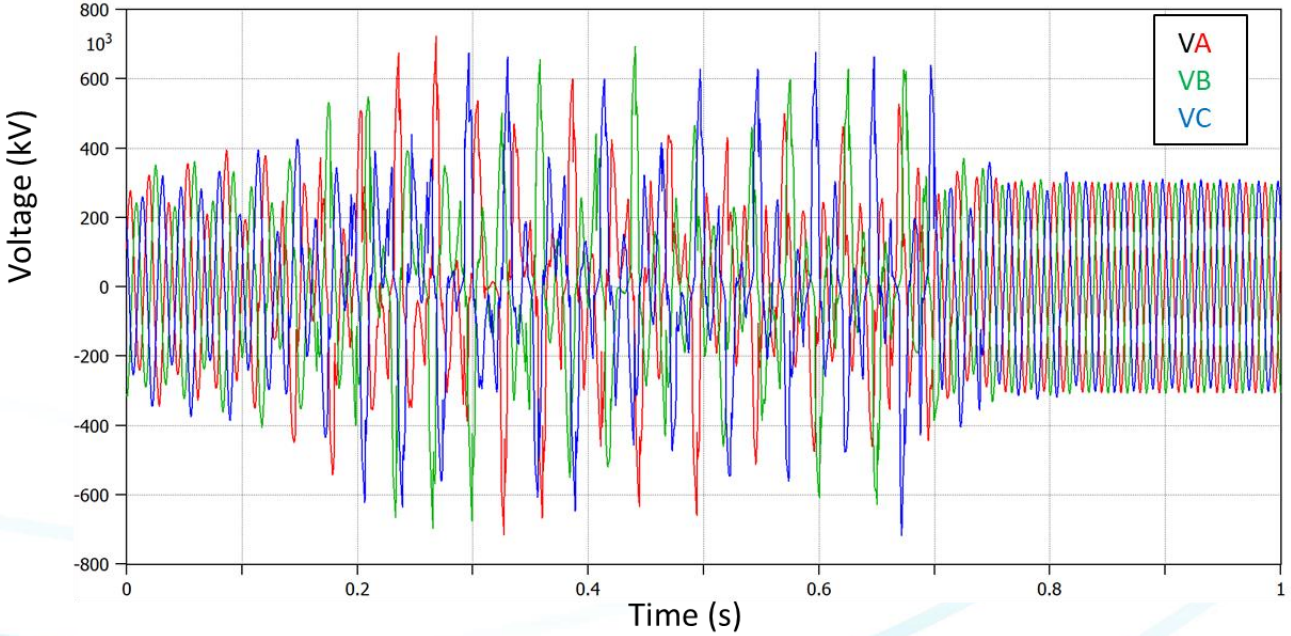

Raw VA signal and oscillation envelope of the signal

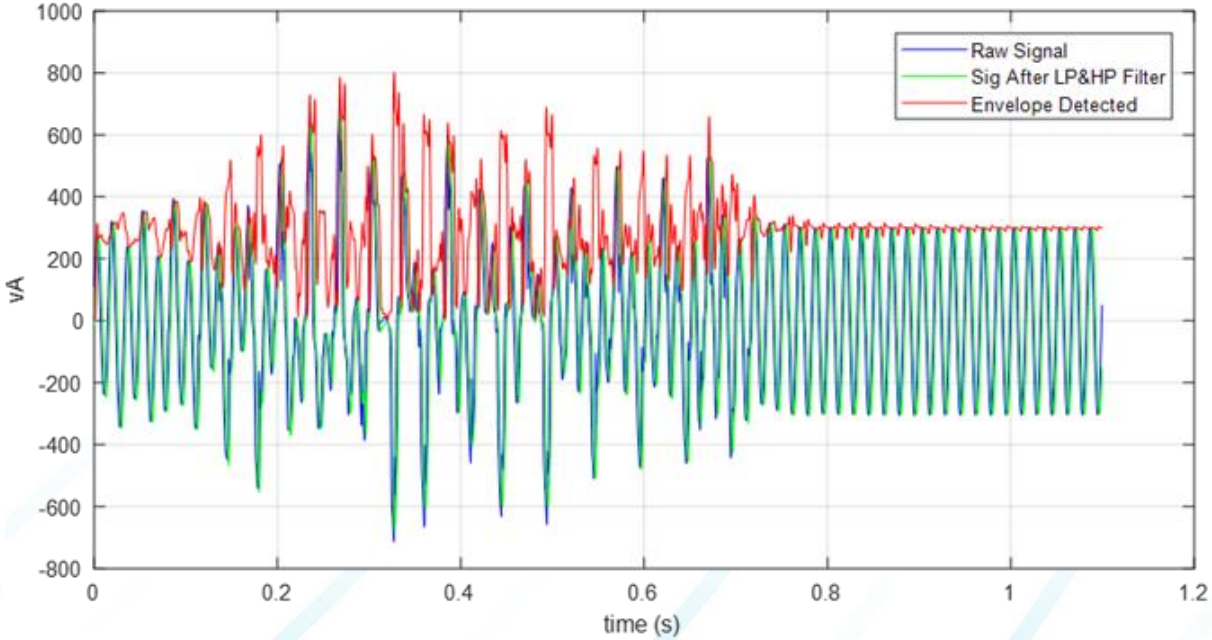

- Nearly 20 minutes passed, and dispatch personnel manually reinserted the two series capacitors on the line C-D. This manual re-insertion caused significant distortion in both voltages and currents and significant oscillations, causing tripping of windfarms WF B and WF C

AEP field oscillation cases

Case #1

Filtered oscillation frequency from VA signal

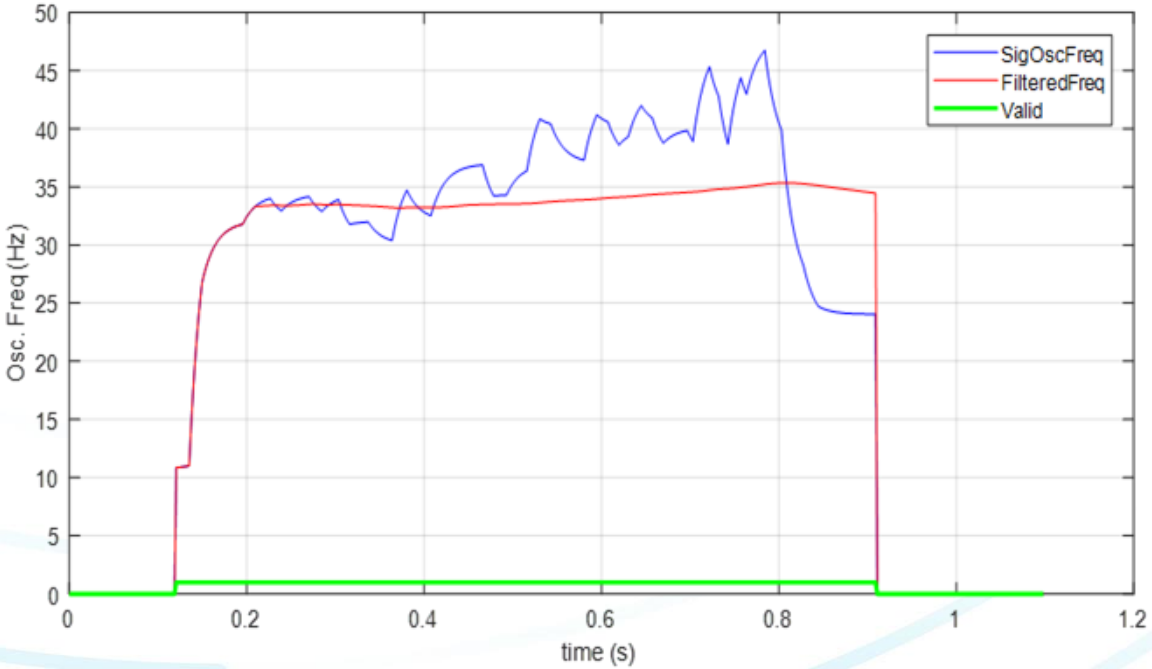

Measured damping ratio from VA signal

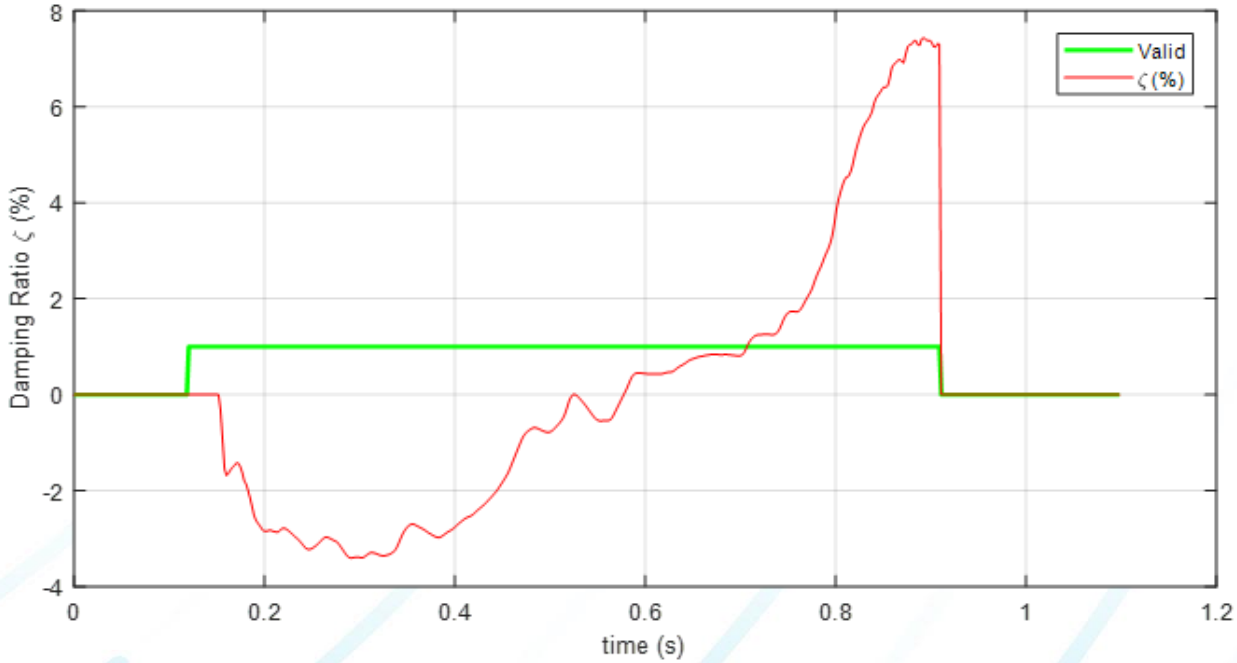

- Damping ratio turns from negative to positive at 0.65s indicating that the system changed from the initial unstable oscillation to a stable oscillation

AEP field oscillation cases

Case #2

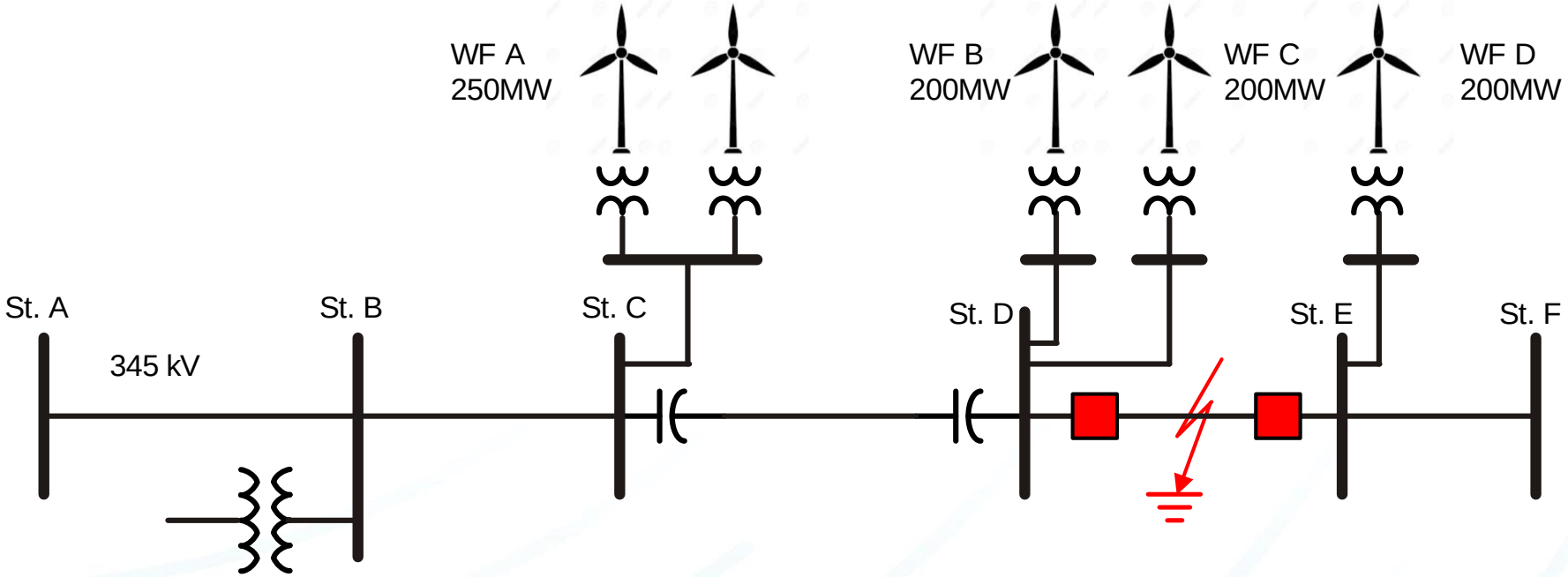

- AG fault between stations D and E, caused this line trip
- Windfarms WF B and WF C became connected through the station D to station C line in series with the in-service series capacitor banks.

AEP field oscillation cases

Case #2

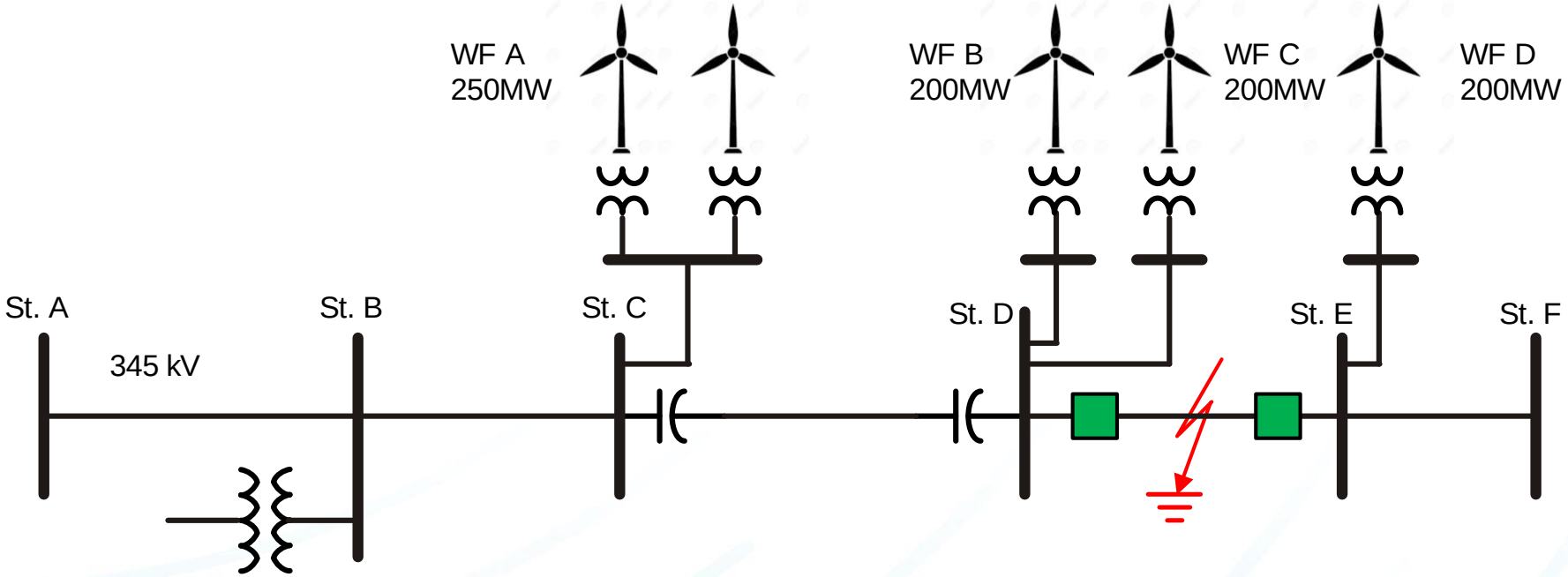

- AG fault between stations D and E, caused this line trip
- Windfarms WF B and WF C became connected through the station D to station C line in series with the in-service series capacitor banks.

AEP field oscillation cases

Case #2

Line WF B to station D currents after line D-E trip

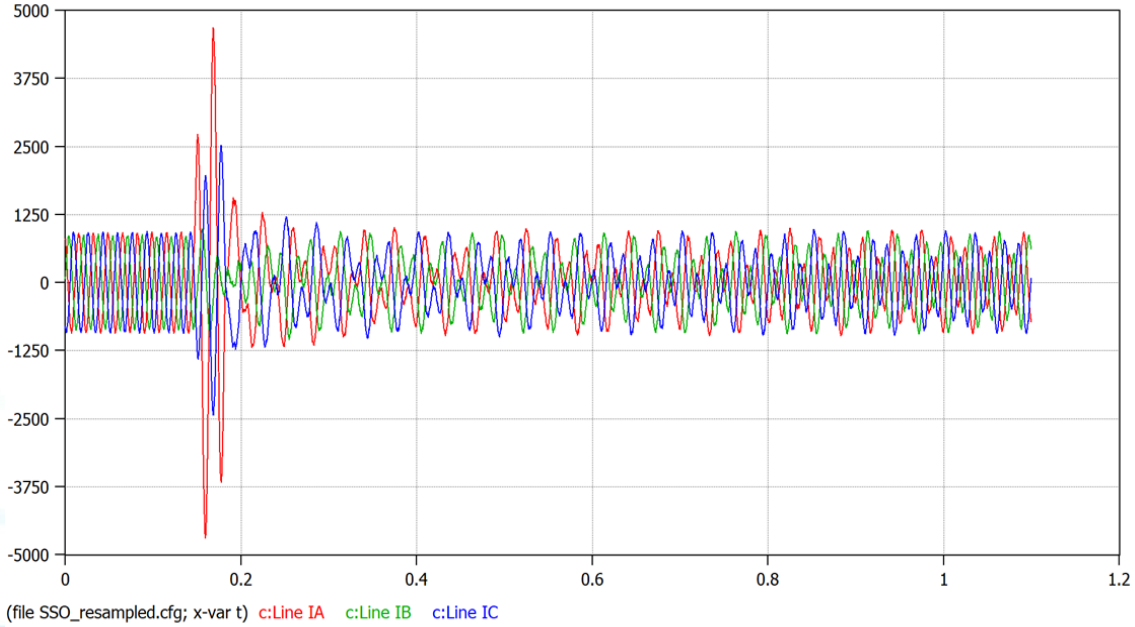

Raw IA signal and oscillation envelope of the signal

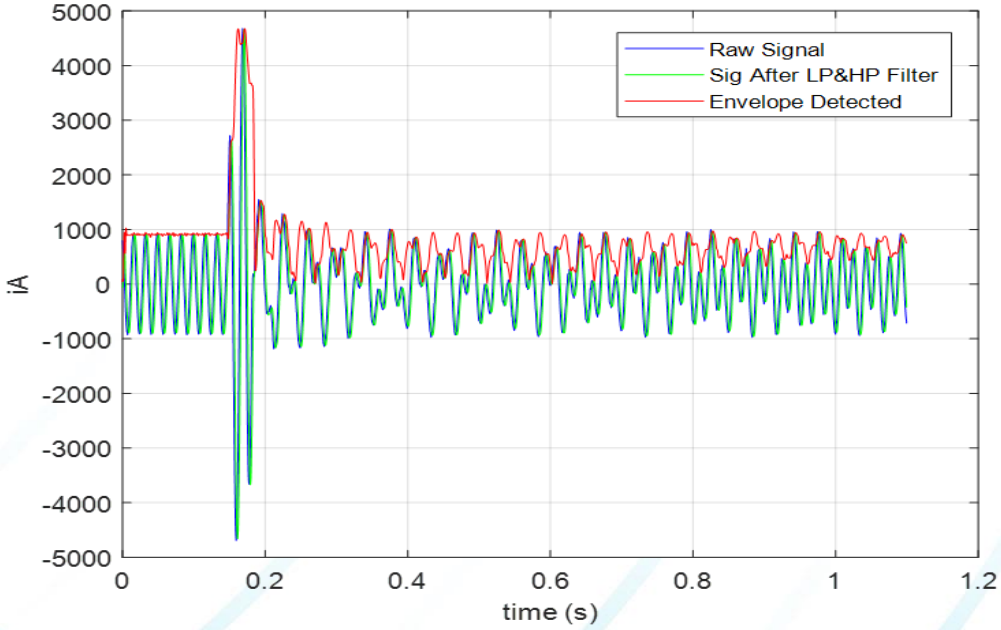

- Tripping of the line D-E caused oscillations, recorded on the line C-D and windfarms WF B and WF C, which subsided sometime later.

AEP field oscillation cases

Case #2

IA signal oscillation magnitude

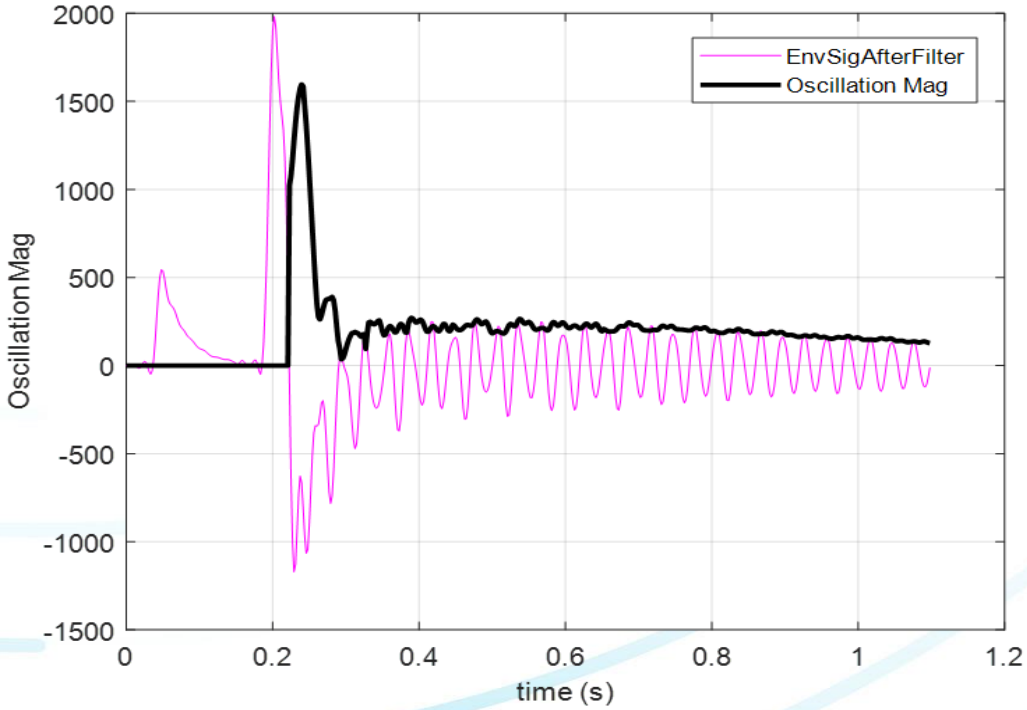

Filtered oscillation frequency from IA signal

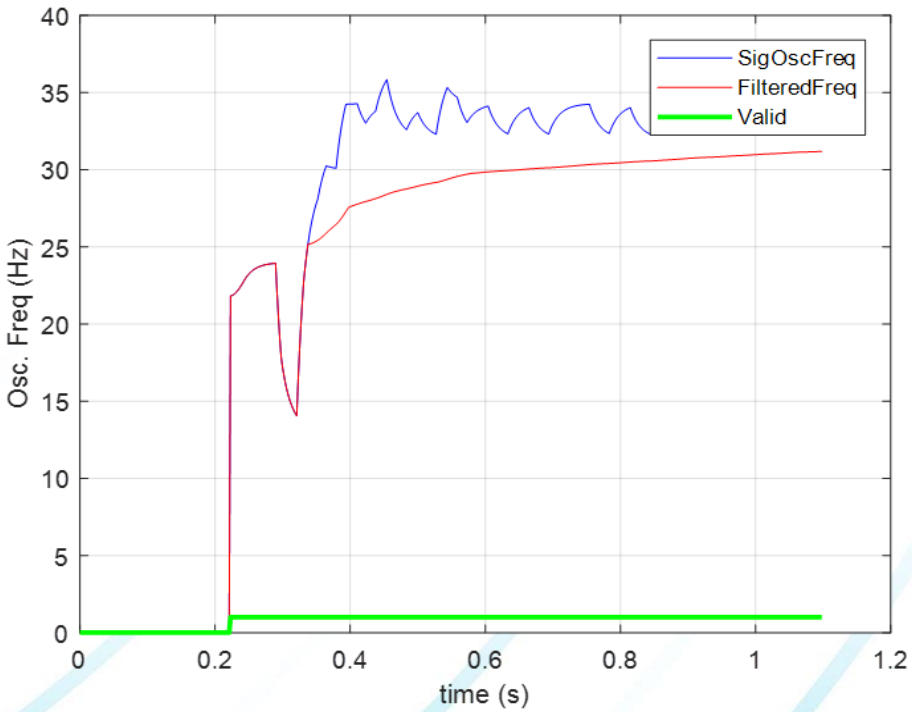

- Oscillation frequency was measured nearly 30Hz and oscillation magnitude at nearly 200A.

Conclusions

- Power system oscillations exist and should not go unnoticed.
- In general, these oscillations are well damped and not an issue. However high-energy oscillations can be unstable and do need to be mitigated to not endanger system stability.
- Today's digital sampling technologies are capable of detecting such oscillations and instabilities from very low frequency to close to system frequency.
- Different measured parameters can used for oscillation detection, such as phase current or voltage, sequence components, real or reactive power and others
- Simultaneous oscillations in different frequency bands can be detected using separate elements.

Thank You

Questions?