# The Missing Link: How CT and VT Connection Errors Affect Protection

Marcel Taberer, Praveen Iyer, and Karl Zimmerman, *Schweitzer Engineering Laboratories, Inc.*

***Abstract*—Validating proper current transformer (CT) and voltage transformer (VT) wiring, terminations, and grounding is fundamental to successful performance of the protection system. Occasionally, errors in CT and VT connections can occur, such as missing or broken neutral wires, multiple or missing ground connections, physical wiring errors, blown VT fuses, or failures within the instrument transformers. These errors can lead to undesired operations of the protection system.**

**This paper reviews the fundamentals of CT and VT connections. The paper shall discuss several basic and advanced testing and commissioning approaches that can help find common wiring errors and improve protection. The paper then describes several actual field events of undesired or unexpected relay performance due to improper CT or VT circuit connections, setting or drawing errors, and details on how testing and commissioning checks would have prevented these events from happening. These events include transmission line protection with distance and directional elements, high-impedance bus differentials, generator protection with loss-of-field elements, and transformer differential protection.**

## I. Introduction

Protective relays are commonly connected to the secondary windings of current transformers (CTs), voltage transformers (VTs), or coupling capacitor voltage transformers. These three pieces of primary equipment are also known as instrument transformers (ITs). Their purpose is to provide galvanic isolation from high voltages and reduce primary currents and voltages to a nominal quantity recognized by the protective relays. Selecting the correct ITs for an application is imperative: failing to do so may compromise the relay's performance, as the output of the IT may no longer be an accurately scaled representation of the primary quantity. Reference [1] offers insight for selecting the appropriate CTs for a specific application. However, having accurately rated ITs is of no use if these devices are not properly connected. The performance of the protective relay is reliant on its programmed settings and on the current and voltage inputs from the ITs. For example, a voltage-polarized directional overcurrent element requires a polarizing quantity (voltage from the VTs) and an operating quantity (current from the CTs) to operate correctly. Thus, if the ITs providing these analog quantities fail or are not connected properly, or if the relay settings are not consistent with the system parameters, then the relay may unexpectedly operate and may cause unwanted service interruptions.

Section II discusses industry practice on how to wire IT secondary circuits, ideal IT grounding location, and IT polarity connections. Section III describes a methodical approach to commissioning. Section III also offers some checks that can be adopted during commissioning and should be performed before connecting a piece of equipment to the power system.

Section IV discusses real-life example events and demonstrates how CT and VT connection errors can cause an undesired operation of the protection system. These events include transmission line distance protection, directional comparison blocking (DCB) scheme with directional elements, high-impedance bus differentials, and transformer differential protection. Section IV also bolsters the points made in the preceding sections and demonstrates how following either the standard wiring practice discussed in Section II or the commissioning approaches described in Section III would have helped in locating the errors sooner, thereby preventing these misoperations from occurring.

Apart from wiring errors resulting in inconsistent analog quantities measured from the ITs, the relay performs based on the settings programmed. Thus, it is vital that settings like CT ratio, VT ratio, and phase rotation should reflect the actual IT's nameplate data and system phase rotation accordingly. Section IV demonstrates an example of an incorrect phase-rotation setting in a relay that resulted in a misoperation of the loss-of-field element while commissioning a generator online.

This paper shall serve as a guide to understanding common practices for IT secondary connections. This paper shall also list various basic and advanced testing philosophies to help discover possible wiring errors prior to system energization. The example events at the end of this paper demonstrate the importance of these testing techniques.

## II. Fundamentals

The purpose of installing a protection system is that it should be dependable for all in-zone faults and should be secure for any out-of-zone faults. Each element that constitutes a protection system (such as circuit breakers, ITs, etc.) and its associated wiring must perform accurately for the protection system to be 100 percent effective. This paper shall focus on IT wiring.

One way of eliminating IT wiring errors is to follow standard wiring practices and guidelines. This would help mitigate potential errors found during commissioning. This section specifically details application guidance on grounding and conventional wiring practices for ITs and their secondary circuits.

Three aspects of IT secondary wiring implementation must be considered:

- Neutral connection and grounding
- Primary and secondary polarity connections
- Phase rotation

### A. *Neutral Connection and Grounding of IT Secondary Circuits*

IEEE C57.13.3-2014 stresses the importance of and provides guidance on grounding IT secondary circuits [2]. Although this subsection briefly describes the practices specified in the standard, one should refer to this resource for more detailed information.

#### 1) *Connect Only One Grounding Point Per Secondary Circuit*

An IT secondary circuit consists of the IT windings and all the secondary equipment connected to the winding (e.g., coils, contacts, protective relays, and other control and monitoring devices). A typical radial feeder protection scheme is illustrated in Fig. 1. Note that one set of three-phase CTs and associated relays constitutes a single CT secondary circuit.

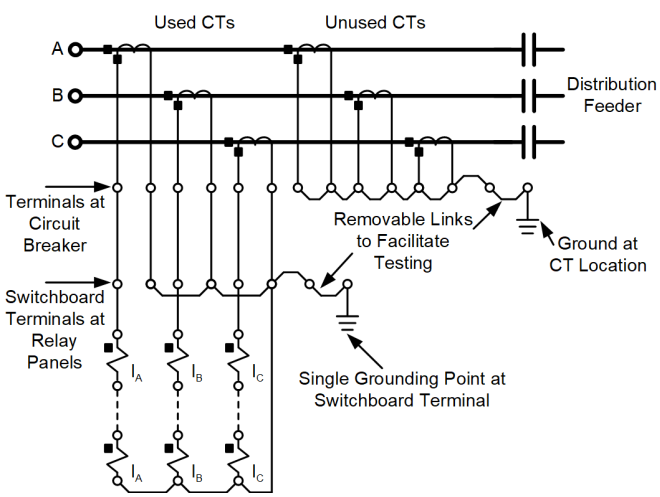


Fig. 1. CT secondary circuits for radial feeder scheme.

Regardless of the number of secondary windings in a circuit, the secondary circuit should be solidly grounded to the grounding grid at only one point, as in Fig. 1. Multiple grounds might produce circulating currents which can flow through the equipment connected between those grounds and may cause inaccuracies on equipment measurements and damage the insulation of the secondary circuit wiring and the neutral conductors.

#### 2) *Connect Used ITs to Ground Near the Relays at the Switchboard Terminal and Connect Unused ITs to Ground at IT Location*

Typically, there are two practices to ground the IT secondary circuit: grounding the circuit at the IT location (at CT or VT terminal blocks) or grounding the ITs at the first point of application (i.e., at the switchboard terminals or relay location).

##### a) *Grounding Point for Used ITs*

Reference [2] suggests grounding ITs that are used in a secondary circuit at the first point of application near secondary devices (i.e., switchboards or control house). Relays and other secondary devices are typically placed in the control house or switchboard panels, which are generally quite a distance away from the IT location. Thus, if the circuit is grounded at the IT location, then significant voltages can develop at the switchboard terminals during a ground fault. This can be hazardous to personnel working on the secondary device and might also damage secondary equipment.

Another reason to ground ITs at the first point of application is because it then becomes convenient to locate and isolate the ground during testing. Fig. 1 illustrates the grounding of a used CT circuit at switchboard terminals.

##### b) *Grounding Point for Unused ITs*

In cases where ITs are not used or connected, ground at the IT location. Fig. 1 shows the grounding of an unused CT at the CT location. The grounding location should be accessible to facilitate the temporary disconnection and reconnection of the ground during testing. The use of fuses, contacts, auxiliary relays, or any switching devices that may unexpectedly open or leave open the ground connection is not recommended [2]. Sometimes, an IT circuit has multiple secondary windings brought back to the switchboard, but not all secondary windings are connected to a protective device. Fig. 2 shows two recommended methods for grounding these unused VT circuits [2]. Method 1 places the ground at the switchboard, as seen in Fig. 2(a).

However, grounding according to Method 1 can increase the used winding's susceptibility to noise created by the unused winding during ground faults. If noise susceptibility is apparent, then Method 2, as shown in Fig. 2(b), is recommended [2]. In this method, the neutral of the unused secondary windings is connected to the neutral of the used secondary windings at the IT location, and then connected to ground at the relay location.

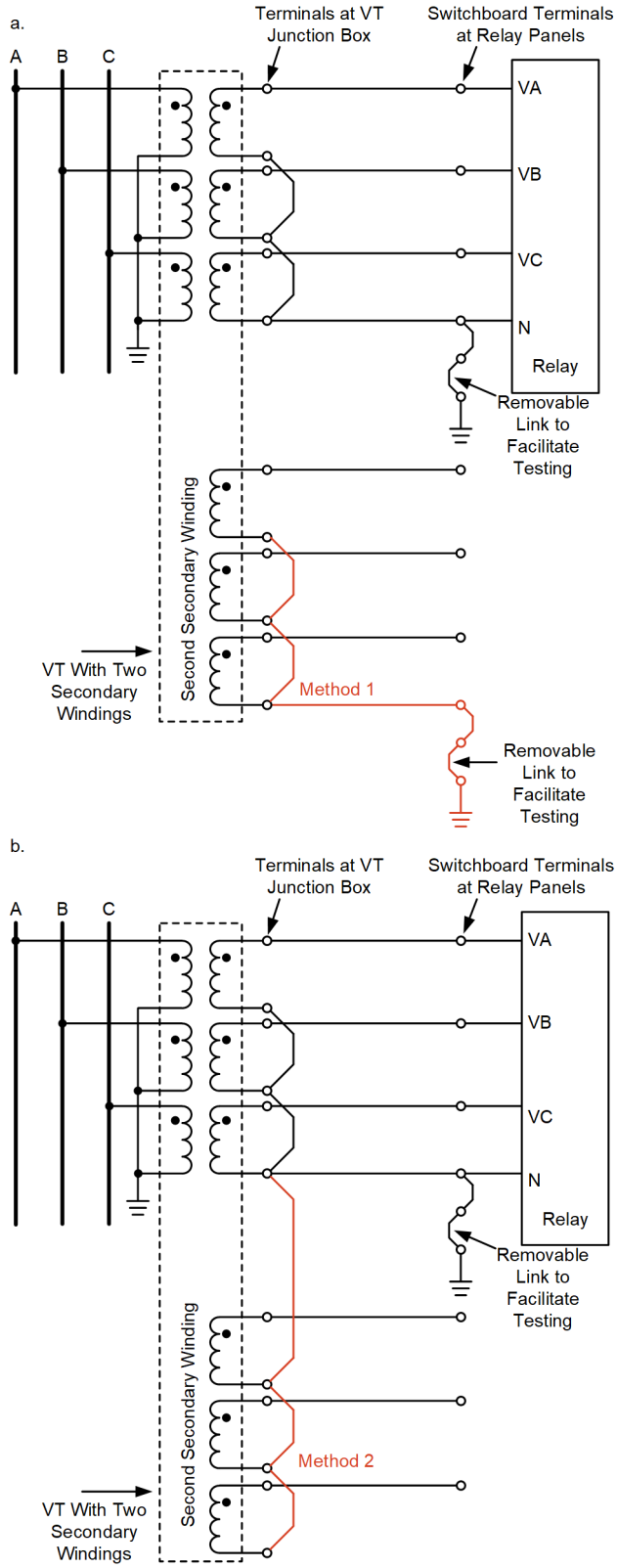


Fig. 2. Grounding of unused VT secondary windings: (a.) Method 1 and (b.) Method 2.

### 3) *Ground Conductor Size*

The grounding conductor size shall be as large or larger than the phase conductors, per [2]. Per National Electric Safety Code (NESC) guidelines, if copper wires are used, then the ground conductor should be of American Wire Gauge (AWG) size #12 because of its mechanical strength and current-carrying capacity. If the ground wire is of any other material, then the current-carrying capacity of the wire should be greater than the #12 wire.

## B. *Polarity Connections*

Fig. 3(a) shows the polarity marking of the CTs. The polarity marked H1 defines the direction of primary current ($I_P$) entering the CT primary winding and the polarity marked X1 defines the direction of the transformed secondary current ($I_S$) leaving the CT secondary winding. Both these currents are in phase with each other. Similarly, Fig. 3(b) shows the polarity marking of the VTs, which define the direction of voltage drop from the polarity terminal to the non-polarity terminal. Also, the voltage drop from the polarity terminal to the non-polarity terminal on the primary side ($V_P$) is in phase with the voltage drop from the polarity terminal to the non-polarity terminal on the secondary side ($V_S$).

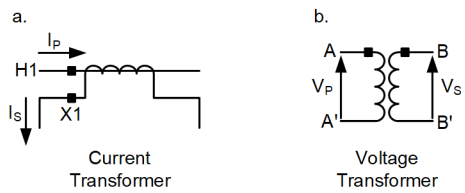


Fig. 3. IT polarities.

The standard practice is to wire the CTs and VTs with conventional polarity connection, meaning that the primary CT polarity should be placed away from the primary protected device and that the secondary CT polarity terminal should be connected to the polarity terminal of the relay current input coils. Similarly, for the VTs, the primary-side polarity terminal should be connected to the phase conductors, and the secondary-side polarity terminals should be connected to the polarity terminal of the relay voltage inputs.

Care must be taken, and the wiring must be adjusted, when not following conventional polarity connections. Failing to do so may result in inaccurate performance of the relay.

## C. *Phase Rotation*

Consider Fig. 4. The three sets of phasors, A, B, and C, rotate counterclockwise, and the sequence in which they pass the reference point X is called the phase rotation.

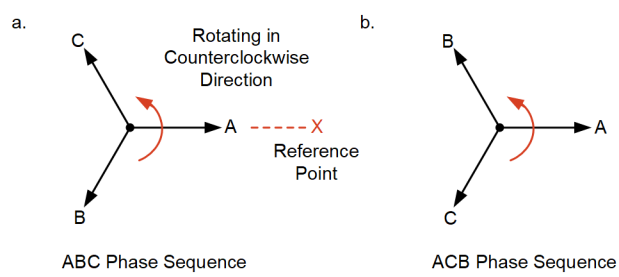


Fig. 4. (a.) ABC phase sequence and (b.) ACB phase sequence.

Thus, the phase rotation of the phasors shown in Fig. 4(a) is ABC and the phase rotation of the phasors shown in the Fig. 4(b) is ACB. It is important for the protective relay or measurement device to reflect the accurate phase sequence of the power system. For this to happen, one must connect the ITs

on the A-Phase, B-Phase, and C-Phase of the system to the A Phase, B-Phase and C-Phase terminals of the CT and VT analog inputs at the protective relay or measuring device, respectively, with conventional polarity connections. Failing to do so may cause the relay to misinterpret the phase sequence of the connected system, which in turn may cause the relay to perform unexpectedly.

Even when standard wiring practices and guidelines are in place, wiring errors are still a possibility. Thus, implementing a diligent commissioning approach is necessary before energizing primary equipment.

## III. Testing and Commissioning Approaches for IT Circuits

This section highlights good commissioning and field-proven testing practices. A comprehensive approach to commissioning as well as the top ten lessons learned from commissioning protective relay systems is also offered in [3].

Commissioning can be broken up into two parts. The first part is the cumulative preparation done before the actual onsite work, like deriving settings, creating drawings to show ac and dc schematics, factory acceptance testing, scheme testing, and relay testing. The second part is the onsite commissioning. This part is vital to ensuring a successful, reliable, and secure integration of the primary equipment with the relevant relays and measuring equipment. The onsite commissioning portion includes CT and VT secondary wiring verification and testing, primary injection recommendations for IT circuits, and final checks.

This paper is not intended to be used as a safety document. Field personnel should always follow the appropriate requirements and recommendations as set forth in NFPA 70 (NEC) [4], NESC [5], and related standards.

### *A. CT and VT Secondary Wiring Verification and Testing*

Fig. 5 illustrates some common issues that may arise on the secondary wiring of CT circuits. It shows a typical Delta-Wye transformer that has bushing CTs on both the high-voltage (HV) and low-voltage (LV) bushings of the transformer. It showcases a common CT arrangement where both CTs are connected in wye. The HV bushing CT secondary wiring is landing on IAW1, IBW1 and ICW1 respectively on the current channel inputs on the differential relay via test switch TS1-1. The LV CT secondary wiring is, as per design, expected to land on IAW2, IBW2 and ICW2 respectively on the current channel inputs on the differential relay via test switch TS1-2. Point numbers 1–7 reflect some of those common issues.

- **Point 1** indicates a wiring swap issue where the B-Phase CT secondary wiring is going to the A-Phase channel input on the relay, IAW2. Similarly, the A-Phase CT secondary wiring is going to the B-Phase channel input on the relay, IBW2.
- **Point 2** indicates a second ground on the HV bushing CT circuit.
- **Point 3** indicates an issue where the insulation of the secondary wiring has been cut or damaged during installation, which could lead to unintentional grounds on the CT circuit, water intrusion, or other failures.
- **Point 4** indicates a CT tapping issue that will result in a CT ratio error.
- **Point 5** indicates the CT polarity can be rolled [3].
- **Point 6** indicates that there may be a missing neutral wire [3].
- **Point 7** indicates that there may be an open-circuit CT which can cause personnel injury and equipment damage.

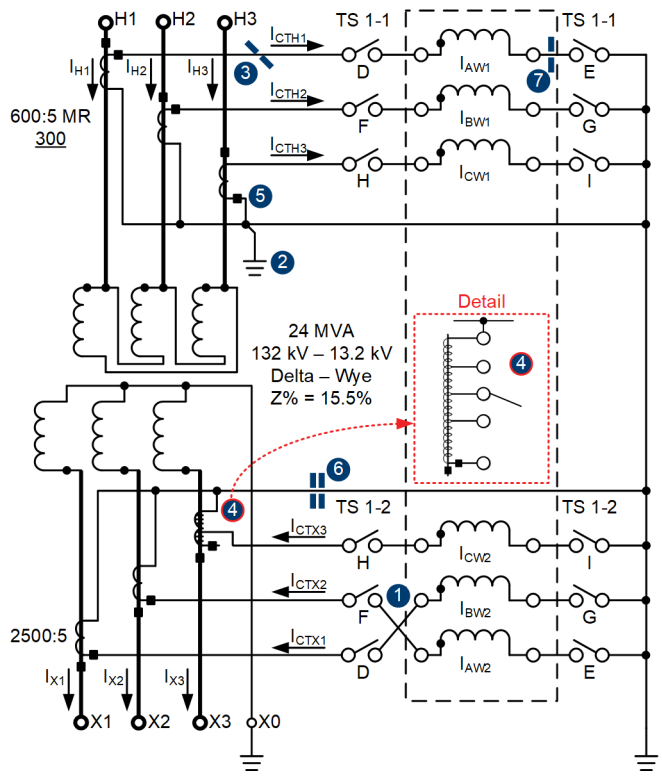


Fig. 5. Typical CT secondary wiring with seven common issues. An enlargement is provided for Point 4.

Note: Fig. 5 assumes ABC phase rotation, where A-Phase lands on H1, B-Phase lands on H2 and C-Phase lands on H3.

Similar issues can also be easily missed on VT secondary circuit wiring. To avoid errors like those seen in Fig. 5, it is imperative to have a methodical approach when verifying the integrity of the secondary wiring interconnecting the ITs to the relevant relay.

The following subsections discuss:

- The importance of physical cable checks that can be easily carried out before any testing is performed.
- How to perform grounding checks on the secondary wiring of ITs to align with Section II.
- The importance of insulation testing.

Then, Section III.B provides details regarding primary injection supplemented with [6].

#### *1) Physical Cable Checks*

IT secondary circuits are generally routed via a single multicore cable that contains all three phases and the neutral. Sizing of conductors and details in general regarding the design and installation of cables in substations is outlined in

IEEE Std. 525-2016 [7]. Before testing, it is prudent to make these recommended observations as they may uncover any obvious errors on the IT's secondary circuits.

- **Observation 1**: Verify that the IT circuit's wire's gauge matches that of the AWG standards as listed in the cable schedule found on the site drawings. The larger the AWG-listed gauge, the smaller the cable's diameter. Most cables have text written on the insulation to indicate the gauge of the wire, as shown in Fig. 6.


Fig. 6. AWG wire verification on the insulation.

- **Observation 2**: Verify the cable labelling of the wires for each IT circuit at every termination point along the circuit, including the test switches, to the rear of the relay, and confirm that they match the ac drawings. A test known as ringing, which uses an ohmmeter, can be performed to test the cables if the cable numbers printed on the insulation are not clear. Because the run from the substation yard to the control room is generally a long distance apart, one can place a ground lead on the one end of the cable; one lead of an ohmmeter would then connect to the other end of the cable, and the ohmmeter's other lead would be connected to ground, as shown in Fig. 7. A repetitive on-and-off tap to ground will cause the ohmmeter to read 0 Ω and back to infinity Ω—or ring and not ring with the tap— thus verifying that the correct cable is selected and positioned correctly.

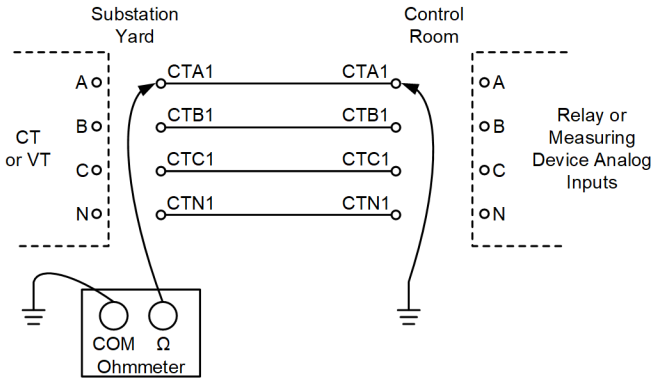


Fig. 7. Ringing test on the IT secondary circuit wires.

Note: General grounding and wire issues may compromise this test. It is recommended to perform an insulation test, as described in Subsection III.A.3, before proceeding with the ringing test.

- **Observation 3**: Visually confirm that the grounding on the IT circuits match the standard as outlined in Section II and correlate with the ac drawings.
- **Observation 4**: Visually confirm that there are no cuts in the cable insulation. Cuts in the cable insulation will compromise the integrity of the circuit and may also cause unintentional grounds.
- **Observation 5**: Ensure that there are no visible lugs that have been crimped in a manner that may compromise the connection. A gentle tug on the wire, to determine if it pulls out of the crimp, is a good test to verify if the crimp is adequate.

### 2) *Multiple Grounding Checks*

Section II explained the fundamentals of IT connections and correct grounding practice for IT circuits. However, when multiple grounds exist undesired operations may occur, such as a transformer phase-differential element misoperation due to multiple ground loops [8]. A test known as the ground/unground test is important to verify that only one ground point (the intentional ground) is connected on the IT circuit. Reference [8] provides a detailed test procedure for performing the ground/unground test using a megohmmeter with a CT circuit, illustrated in Fig. 8. The same approach can be followed for a VT circuit.

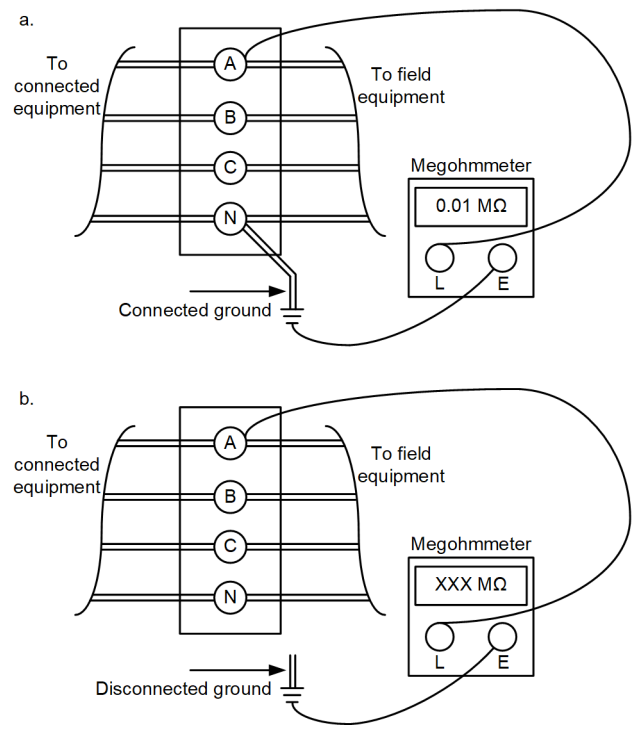


Fig. 8. Megohmmeter connections for the ground/unground test.
(a.) Connection to the neutral block with intentional ground in place.
(b.) Connection to the neutral block with intentional ground removed.

### 3) *Insulation Testing*

Insulation testing on IT circuits is performed to verify the integrity of the insulation and to ensure no damage was done when the multicore cables were run from the substation yard to the control room. Damage to the insulation could also occur during the glanding process of the multicore cable, where cuts in the insulation may not be easily seen. As per IEEE Std 525-2016 [7], insulation testing should be done when the cables are not connected to the instrument transformer or to the relay. Reference [8] provides a detailed insulation resistance

test procedure that can be used on CT circuits using a megohmmeter, as shown in Fig. 9. The same approach can be followed for a VT circuit.

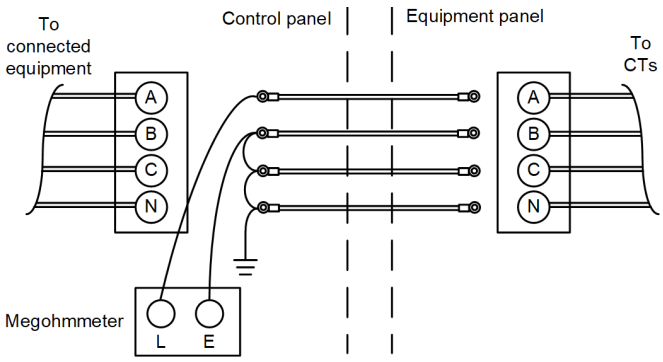


Fig. 9. Insulation resistance test connection using a megohmmeter.

## B. Primary Injection Recommendations for IT Circuits

### 1) CT Circuit Verification

CT primary current injection testing can be performed during equipment commissioning and can detect wiring issues before load is applied. The purpose of three-phase primary current injection testing is to produce balanced current circulation through the primary windings of the CTs. The purpose of single-phase primary current injection is to produce unbalanced currents. With primary current circulation, it is possible to prove all CTs are correctly positioned with the correct polarity, are tapped with the correct CT ratio, and are connected to the relays. Relays with metering capabilities can help with this verification process. Transformer, bus, and line-differential elements can be checked for stability using this approach during commissioning. Current-polarized directional relays can also be verified. Reference [6] provides an extensive overview of performing three-phase primary current injection.

### 2) VT Circuit Verification

Test sets are capable of injecting more than 1 kV ac to allow a measurable quantity of voltage on the secondary VT circuit. Fig. 10 shows a typical test setup, where up to 2 kV ac can be applied to the VT's primary circuit and the secondary voltage is measured to verify the VT ratio. At the same time, the relay with metering capabilities can also verify the primary voltage applied with the correct VT ratio setting. The VT ratio test validates the actual VT ratio and calculates the deviation from the specified nameplate ratio.

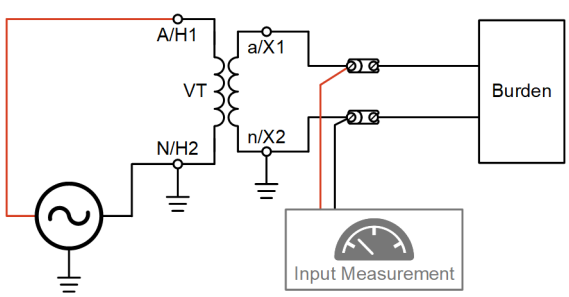


Fig. 10. VT ratio check.

Fig. 11 shows a simple method using a 9 V or 12 Vdc battery and an analog scale voltmeter to verify the polarity of the VT circuit. Make the connections as shown in Fig. 11, where the positive lead of the battery is connected to H1 via a switch and the negative lead is connected to neutral. The positive lead of the analog voltmeter is connected to X1 and the neutral/common lead is connected to neutral. The moment the switch closes, the analog voltmeter needle will show a momentary deflection in the positive direction. When the switch opens, the analog voltmeter needle will show a momentary deflection in the negative direction. This test can be done at all points of connection leading up to the wires on the rear of the relay. If the needle moves in the negative direction at the first flick of the switch, then that indicates a polarity swap in the wiring of the VT circuit. There are test sets available that perform this same functionality by injecting a polarity check signal on the VT primary and measures the polarity check signal on the VT secondary wiring at the same time.

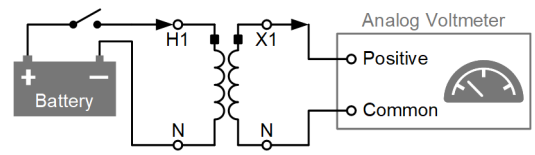


Fig. 11. VT polarity check using a dc battery and voltmeter.

## C. Final Checks

Normally, a switching procedure, or sequence, is adopted to bring online a new piece, or multiple pieces, of equipment at a substation. Some, but not all, of those final checks that can be carried out during the last stages of commissioning are highlighted in the following subsections.

### 1) Documentation and Switching Procedures

Before bringing a new piece of equipment online, a switching procedure should be carefully drafted and peer-reviewed to accommodate for all switching scenarios and intermittent testing required at strategic points during the switching sequence. All documentation, including settings, drawings, and test results (all of which accurately reflect onsite equipment), must be finalized.

### 2) Meter Checks

Microprocessor relays provide metering and event report data (which will be showcased in Section IV), which serve as snapshots of the system which can help to validate proper power system connections during this final stage. The following subsection provides a preview of a meter check's abilities that can be used for various relay applications.

#### a) Generator Meter Check

When a generator is brought online as part of the switching procedure, the meter check provides valuable data about actual voltage, current, and power. Performing this check on a generator will assist in identifying any issues relating to phase rotation by identifying the positive-sequence and negative-sequence components. Fig. 12 shows a typical meter check on a generator indicating healthy positive-sequence voltage and current, encircled red. As generators do not produce negative-sequence voltage and current, the values, encircled green, are trivial when compared to the positive-sequence components. The same can be said about the ground quantities, encircled blue.

If any of this is not evident for normal operations, then phase-rotation settings, polarity settings, or the CT and VT wiring must be investigated.

```
=>MET <Enter>

XXXXXXXX                                  Date: 02/24/2010   Time: 11:43:44.875
GENERATOR RELAY                           Time Source: Internal

                IAX      IBX      ICX      IGX      I1X      3I2X
Mag (A pri.)    505.1    501.2    499.4      6.9    501.9      3.2
Angle (deg)     -30.0   -149.9     89.9    -44.8    -30.0     -4.0

                IAY      IBY      ICY      IGY      I1Y      3I2Y
Mag (A pri.)    500.7    502.5    500.1      9.2    501.1      4.9
Angle (deg)     150.0     30.6    -89.1     40.7    150.5     83.8

                IN
Mag (A pri.)      0.0
Angle (deg)     143.8

                VAX      VBX      VCX      VGX      V1X      3V2X
Mag (V pri.)   9978.0   9982.1   9986.7     53.6   9982.2     38.6
Angle (deg)       0.0   -120.3    120.0    151.5     -0.1     27.1

                VS       VN
Mag (V pri.)      0.0     0.00
Angle (deg)    -102.7    16.9

                VN3      VPX3
Mag (V pri.)     0.66     3.94

                         AX            BX            CX            3PX
Real Pwr (kW)             4362          4348          4312          13023
Reactive Pwr (kVAR)       2523          2474          2505           7503
Apparent Pwr (kVA)        5040          5003          4987          15029
Pwr Factor                   0.87          0.87          0.87           0.87
                            LAG           LAG           LAG            LAG

                FREQX    FREQS
Frequency (Hz)  60.00    60.00
```

Fig. 12. Meter check on a generator verifying sequence components.

### b) *Transformer Differential Meter Check*

Validation of the operate and restraint current when a transformer takes load for the first time is essential. Section IV describes a transformer differential relay misoperation due to a wiring error. After the wiring error is corrected and the transformer is re-energized and starts to take load, one of the first tests to perform is a meter differential check to ensure that the ratio of operate (IOP1, IOP2, and IOP3) to restraint (IRT1, IRT2, and IRT3) current for each differential element is 10 percent or less, as described in Fig. 13.

If this is not evident for normal operations, then phase-rotation settings, polarity settings, CT ratio settings, CT tap settings, or the CT wiring must be investigated.

```
=>MET DIFF          Operate Currents                Restraint Currents
                    IOP1     IOP2     IOP3          IRT1     IRT2     IRT3
I (Mult. of Tap)    0.01     0.00     0.01          0.19     0.18     0.19
                    Second Harmonic Currents        Fifth Harmonic  Currents
                    I1F2     I2F2     I3F2          I1F5     I2F5     I3F5
I (Mult. of Tap)    0.00     0.00     0.00          0.00     0.00     0.00
```

Fig. 13. Per-phase validation on a transformer relay for the operate and restraint currents.

### c) *Transmission Line Current Differential Meter Check*

When a line is energized as part of the switching procedure, the meter check provides valuable data about the actual line current vs. the expected current. Microprocessor relays can also provide the local and remote currents reflected in the meter check, thus validating not only the health of the communications channel but also the current-angle check between local and remote relays. In addition, energizing a line from one end produces line-charging currents. Thus, performing a meter check under this configuration and keeping records of the line-charging current (differential current) can assist with troubleshooting the source of possible standing differential currents. Fig. 14 shows a typical meter capture from a line relay where the local and remote currents are 180 degrees apart for A-Phase, B-Phase, and C-Phase, which is expected for normal load flow conditions. If this is not evident for normal operations, then the phase-rotation settings, polarity settings, CT ratio settings, or the CT wiring must be investigated.

```
=>MET <ENTER>
DIFF RELAY                          Date: 06/05/01   Time: 10:28:50.360
EXAMPLE: BUS B, BREAKER 3

Local                A        B        C        3I0      3I2      I1
I MAG (A Pri)        386.444  385.401  385.597  2.838    1.747    385.813
I ANG (DEG)          -0.10    -119.90  119.80   -2.60    -19.00   0.00

Channel X PRIM       A        B        C        3I0      3I2      I1
I MAG (A Pri)        385.644  387.077  395.563  32.567   30.969   389.172
I ANG (DEG)          179.60   59.50    -56.10   14.80    133.70   -179.00
```

Fig. 14. Local and remote current meter check on a line relay.

Summary—Being ready with a methodical approach before going onsite for commissioning is vital, as seen in this section. Section IV showcases some interesting events and lessons learned.

## IV. Analysis of Field Events

The events in this section were a result of problems identified with either the wiring on the IT circuits or system-related settings, such as the phase rotation and IT ratio.

### A. *VT Wiring Errors Result in Undesired Distance Element Trips*

Loss-of-potential (LOP) logic monitors the health of the relay voltage input source (including VTs, fuses, wiring, and test switches) to prevent unexpected relay operation because of low or unbalanced voltages at the relay input terminals. When asserted, the LOP logic typically disables distance elements. In many relay designs, the relay declares LOP if the voltage decays with no corresponding change in current. In some cases, LOP is not declared if the breaker is open or if the line is out of service at the time the voltage fails. In this case, it is possible that a subsequent out of section fault or high load could cause the distance elements to assert without an actual line fault.

This section covers two separate cases. In both instances, the distance elements tripped undesirably when a line was placed in service with unhealthy voltages.

For Case 1, Fig. 15 shows the voltage phasors at the time the relay was placed in service. Note that VA and VB are similar in both magnitude and angle. The root cause was a wiring error introduced while the line was out of service, thus resulting in similar VB and VA measurements.

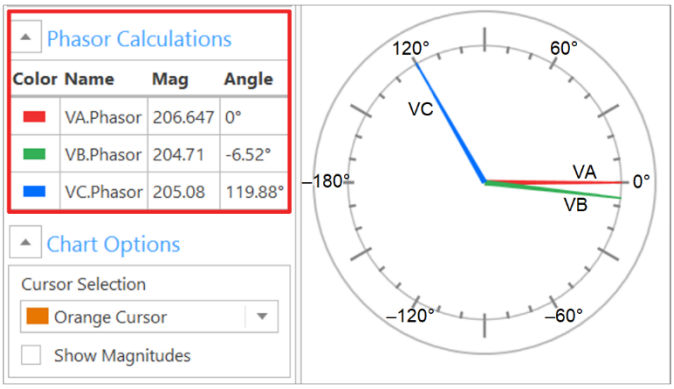


Fig. 15. VB incorrectly measuring actual VA.

In Case 2, a relay was placed in service with zero voltage connected to the relay. Subsequent load caused a Zone 4 time-delayed distance element to assert undesirably as shown in Fig. 16.

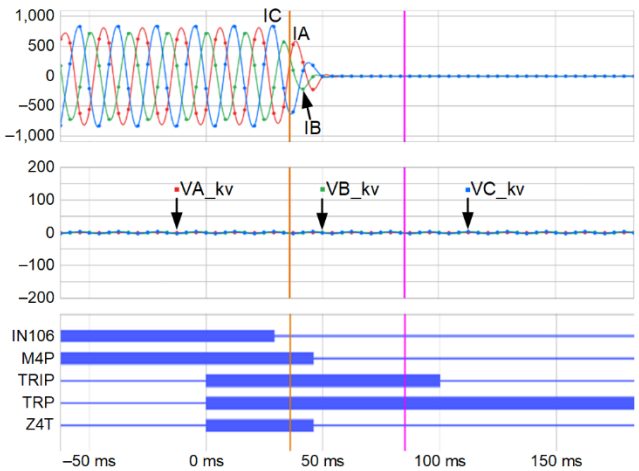


Fig. 16. Case 2 relay placed in service with no voltages connected.

Summary—In both cases, a meter check could have been used to validate healthy voltages.

### *B. Transmission Line Trips When Directional Element Declares Forward for a Reverse Fault and Fails to Send Block Signal*

Fig. 17 shows the one-line system diagram for a three-terminal 161 kV line. The protection scheme deployed is a DCB scheme. An A-Phase-to-ground fault occurred on an adjacent 69 kV line.

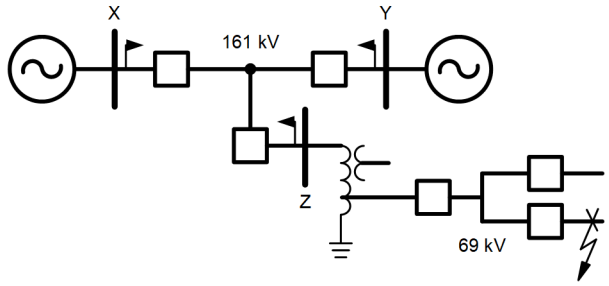


Fig. 17. 161 kV line trips for a fault on 69 kV line.

The ground-directional relays in the scheme use a negative-sequence impedance-based (Z2) element to declare forward or reverse [9]. For this A-Phase fault, the ground-directional relay at the Z-terminal should have declared a reverse fault and sent a block signal, via a communications link, to the remote X and Y terminals. Instead, the ground-directional relay at the Z-terminal declared a forward fault, resulting in an undesired trip of the 161 kV line.

To evaluate why this happened, we plot the measured Z2 against the expected forward and reverse thresholds as shown in Fig. 18. When the measured Z2 (Z2LIM) dropped below the forward threshold (Z2FTLIM), the directional element declared forward to produce a 67G1 trip with no blocking signal (TMB1A) sent.

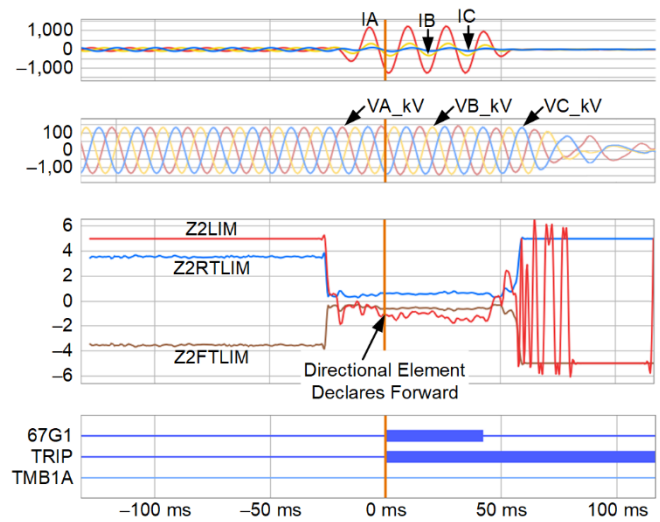


Fig. 18. Directional element incorrectly declares forward fault, relay trips, no block is sent.

The settings were found to be correct based on best practices. Further, the faulted phase current with respect to voltage was consistent with a reverse fault.

However, analyzing the voltages captured during the fault shows that instead of a decreasing voltage signature, as expected, the faulted phase (A-Phase) voltage increased during the fault, as shown in Fig. 19.

a.

Pre-Fault

| Color | Name | Mag | Angle |
|---|---|---|---|
| | VA_kV.Phasor | 94.2864 | 0° |
| | VB_kV.Phasor | 94.5239 | -119.96° |
| | VC_kV.Phasor | 94.2917 | 119.78° |
| | IA.Phasor | 62.4147 | -169.53° |
| | IB.Phasor | 63.6878 | 70.87° |
| | IC.Phasor | 65.4989 | -50.79° |

b.

Fault

| Color | Name | Mag | Angle |
|---|---|---|---|
| | VA_kV.Phasor | 99.0039 | 0° |
| | VB_kV.Phasor | 95.4164 | -118.63° |
| | VC_kV.Phasor | 97.9356 | 126.5° |
| | IA.Phasor | 874.3 | 113.58° |
| | IB.Phasor | 229.069 | 98.94° |
| | IC.Phasor | 72.1748 | 82.48° |

Fig. 19 (a.) Pre-fault and (b.) fault magnitudes and angles.

Further investigation revealed that the A-Phase capacitor voltage transformer (CVT) had been replaced a few years earlier. Further, all recent undesired operations had occurred on A-Phase-to-ground faults (see Table 1). Due to this information, wiring or grounding errors on the A-Phase voltage input source were suspected.

TABLE 1
UNDESIRED TRIPS FOR REVERSE A-G FAULTS

| Date and Time | Faulted Phase | Fault Location (mi) | Targets |
|---|---|---|---|
| 5/27/2018 10:20 | AG T | –99.72 | TRIP COMM ZONE2 |
| 6/28/2018 09:01 | AG T | –85.27 | TRIP ZONE1 |
| 7/17/2018 13:25 | AG T | –160.39 | TRIP COMM ZONE2 |
| 5/6/2019 02:18 | AG T | –166.33 | TRIP COMM ZONE2 |
| 6/21/2019 04:45 | BG T | 19.18 | TRIP ZONE1 |
| 7/10/2019 13:05 | AG T | –118.29 | TRIP COMM ZONE2 |

The original three-line diagram of the CVT indicating the secondary wiring and grounding with notable errors is shown in Fig. 20.

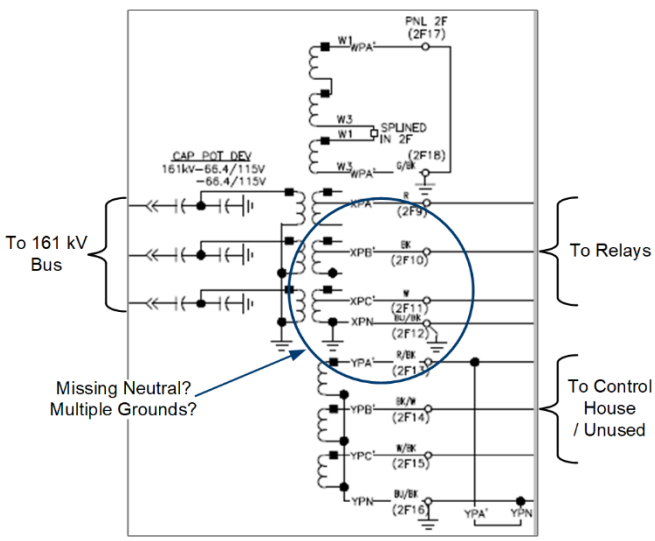


Fig. 20. Original three-line diagram showing possible errors.

Field staff found several drawing and wiring errors at the site which may have been introduced when the A-phase CVT had been replaced. Upon investigation, the field crew found only two, not the expected three, secondary VT windings (W winding was not present). Field staff secured a single ground wire on both the used and unused VT secondary windings. Drawing errors were corrected, extensive ground and neutral wiring tests were carried out, and the protection scheme was placed back in service. Within a few months of these corrections, a fault occurred on the 69 kV bus. The directional element correctly declared reverse and sent a block signal (TMB1A) to the remote terminals, as shown in Fig. 21.

During the fault, the A-Phase voltage dropped as expected, as shown in Fig. 22.

Summary—A floating neutral point in the secondary VT circuit produced incorrect voltage supplied to the A-Phase of the protective relays, which caused the ground-directional element to declare forward for a reverse fault. Wiring and drawing errors were corrected and tested and the directional relay scheme performed correctly thereafter.

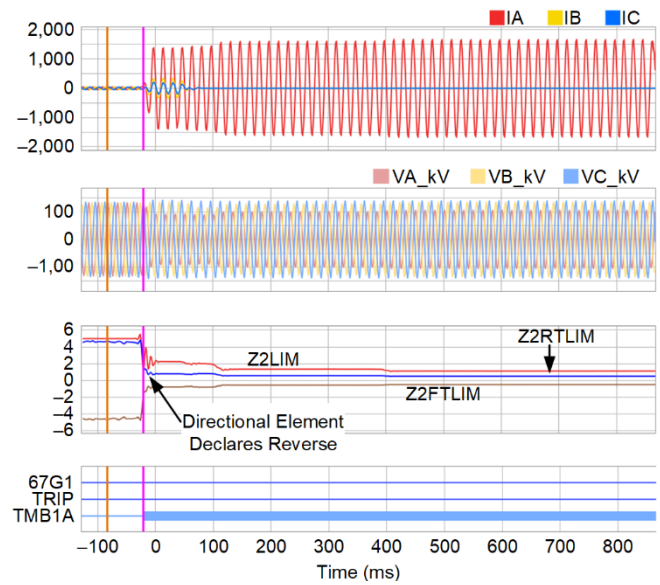


Fig. 21. Directional element correctly declares reverse after field staff correct wiring and drawing errors.

a.

Pre-Fault

| Color | Name | Mag | Angle |
|---|---|---|---|
| | VA_kV.Phasor | 95.3032 | 0° |
| | VB_kV.Phasor | 95.2862 | -121.24° |
| | VC_kV.Phasor | 95.7541 | 118.74° |
| | IA.Phasor | 54.9141 | -168.05° |
| | IB.Phasor | 39.5195 | 90.45° |
| | IC.Phasor | 31.0062 | -33.75° |

b.

Fault

| Color | Name | Mag | Angle |
|---|---|---|---|
| | VA_kV.Phasor | 66.3338 | 0° |
| | VB_kV.Phasor | 97.4202 | -126.82° |
| | VC_kV.Phasor | 100.345 | 120.16° |
| | IA.Phasor | 1018.36 | 96.54° |
| | IB.Phasor | 248.532 | 91.54° |
| | IC.Phasor | 139.336 | 80.44° |

Fig. 22 (a.) Pre-fault and (b.) fault magnitudes and angles after corrections.

### C. *Incorrect CT Connections Result in Auxiliary Transformer Trip When Energized*

A DABY station transformer is shown in Fig. 23. Winding 1 and Winding 2 current inputs on the relay receive current signals from the wye-connected 1,200:5 CTs.

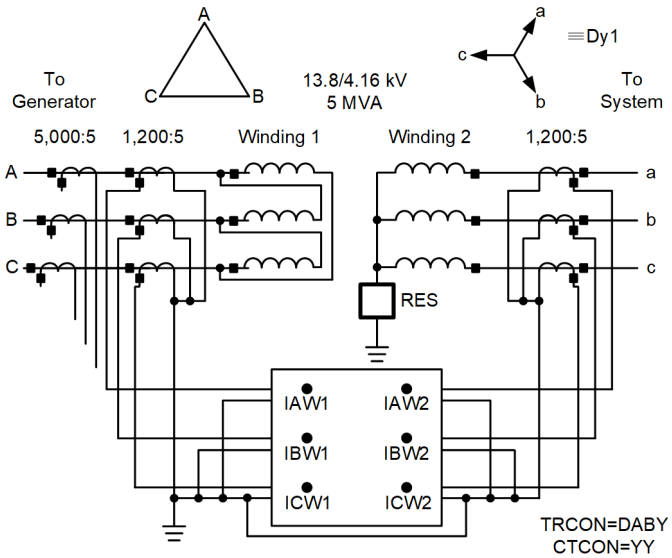


Fig. 23. DABY transformer three-line diagram with intended CT connections.

Note: Fig. 23 assumes ABC phase rotation, where A-Phase lands on H1, B-Phase lands on H2 and C-Phase lands on H3 (bushing labels are not shown).

When the transformer was energized to pick up station load, the transformer differential element tripped. A portion of the relay settings are shown in Fig. 24.

```
W1CT := WYE   W2CT := WYE
CTR1 := 240   CTR2 := 240   MVA   := OFF   ICOM := Y
W1CTC := 0   W2CTC := 1 VWDG1 := 13.8 VWDG2 := 4.16
```

Fig. 24. Portion of the relay settings.

Based on the settings, the phase relationship (IAW2_A leading IAW1_A by 150 degrees) and a phase rotation of ABC appear to be correct, as shown in Fig. 25.

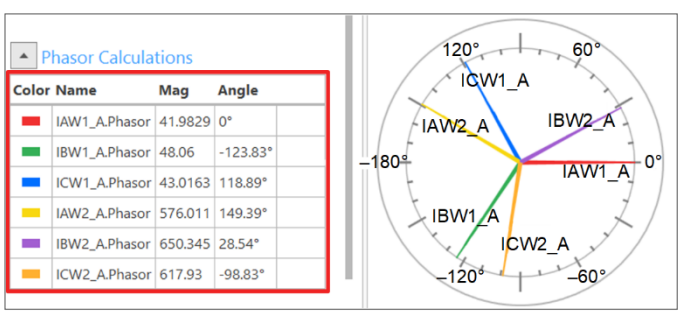


Fig. 25. Winding 1 and Winding 2 uncompensated currents at energization and after taking load.

The load was expected to be about 4 MVA. For this, we can calculate the expected currents using the primary amperes calculation, (1).

$$\text{Ipri} = \frac{\text{MVA} \bullet 1{,}000}{\sqrt{3} \bullet \text{VWDG}} \tag{1}$$

Thus, the expected primary currents should be 167 A (at 13.8 kV) and 555 A (at 4.16 kV), respectively. This shows that Winding 2 currents were near the expected value, but the Winding 1 currents were about four times lower than expected (41 A vs. 167 A), as shown in Fig. 25.

Field staff suspected a wiring error. As shown in Fig. 23, there were also 5,000:5 bushing CTs on the 13.8 kV Winding 1. Secondary wiring was terminated for this 5,000:5 CT at the same relay panel as the 1,200:5 CTs. Field staff quickly determined that they had indeed found the root cause because the currents were off by a factor of approximately four (5,000/1,200). The current inputs of the relay for Winding 1 were connected to the 5,000:5 CTs instead of to the intended 1,200:5 CTs.

Summary— Discrepancies between the drawings and the actual field wiring resulted in incorrect CT connections to the relay, which caused the undesired operation.

### D. *Phase-Rotation Setting Error Leads to a Loss-of-Field Trip on a Generator*

One fundamentally important function when setting generator protection is the loss-of-field (LOF) element. This section describes the theory involved with the LOF function on generators and describes a case study.

#### 1) *LOF Theory*

LOF means that there is not enough excitation available for proper generator operation, which means that the synchronous generator acts as an induction generator. In the event of such an occurrence, the typical, observable signs would be an increase in the rotor speed , the active power (P) from the machine to the system would decrease, and the generator would import reactive power (Q) from the system. This type of response can cause the generator to operate outside of its capability curve, which can cause system instability and place unnecessary stresses on the generator.

Generator relays will typically have an impedance-based LOF characteristic element that uses a pair of offset Mho circles. Fig. 26 shows the typical two-zone application with two options normally available for settings engineers. Only one option can be used, and the decision is solely based on whether a positive-offset or a negative-offset Zone 2 is required. Reference [10] explains another approach regarding LOF and provides more insight on the philosophy.

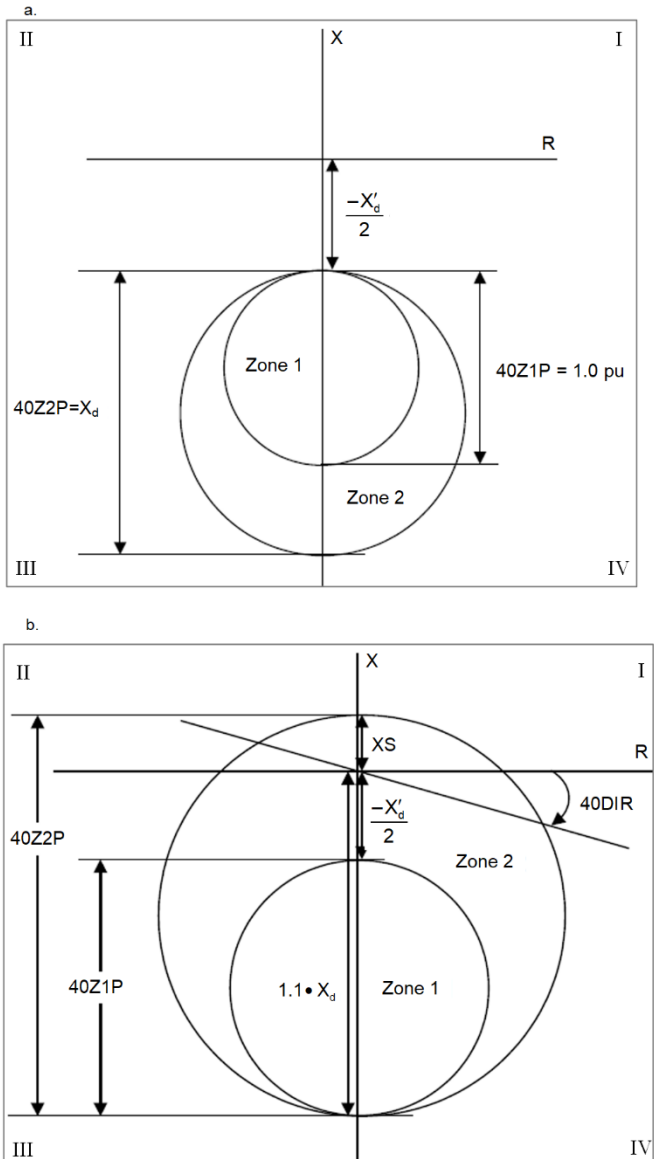


Fig. 26. The 40Z element, also known as the impedance-based LOF Mho characteristic. (a.) LOF characteristic with a negative Zone 2 offset. (b.) LOF characteristic with a positive Zone 2 offset.

The LOF algorithm typically uses positive-sequence voltage (V1) and positive-sequence current (I1) to derive the positive-sequence impedance (Z1). For a healthy overexcited generator, the Z1 plots in Quadrant 1 within the four-quadrant impedance plane. An instantaneous trip occurs when Z1 plots inside the Zone 1 Mho characteristic. If the Z1 plots inside the Zone 2 Mho characteristic, a time-delayed trip will occur.

### 2) *LOF Case Study*

This case study demonstrates the LOF trip on a 2.4 kV synchronous generator rated at 1.1 MVA. Fig. 27 shows the current of the machine, noted with an ABC phase rotation as indicated.

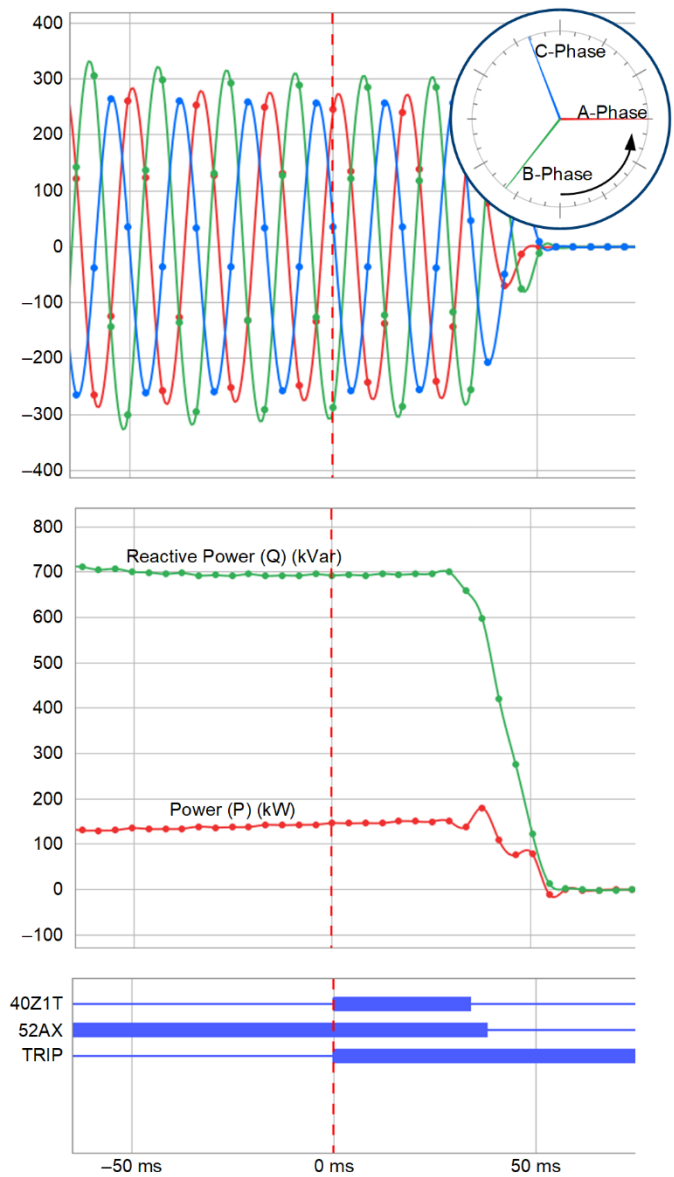


Fig. 27. Current trace with the power and reactive power plot for an LOF event.

The problem was that an LOF trip occurred when the generator breaker was closed on the bus, at which point the power exported to the system was approximately 150 kW of P and 700 kVar of Q, as shown in Fig. 27. The digital bit 40Z1T indicates that there is an LOF trip in Zone 1, and the status change of the 52AX breaker contact indicates that the breaker is tripped.

Note that the typical signature of P and Q, as described in the LOF theory, is not apparent. The P is low in comparison to the rating of the machine, which is evident in an LOF event, but the Q from the machine is still in the direction of the power system. Thus, Q is still exported, rather than imported as expected in an LOF event.

Based on this unusual behavior and the resulting trip event, an impedance plot is derived to validate the LOF, shown in Fig. 28. Note that Z1 plots within the Zone 1 Mho characteristic, which confirms the 40Z1T digital status assertion shown in Fig. 27.

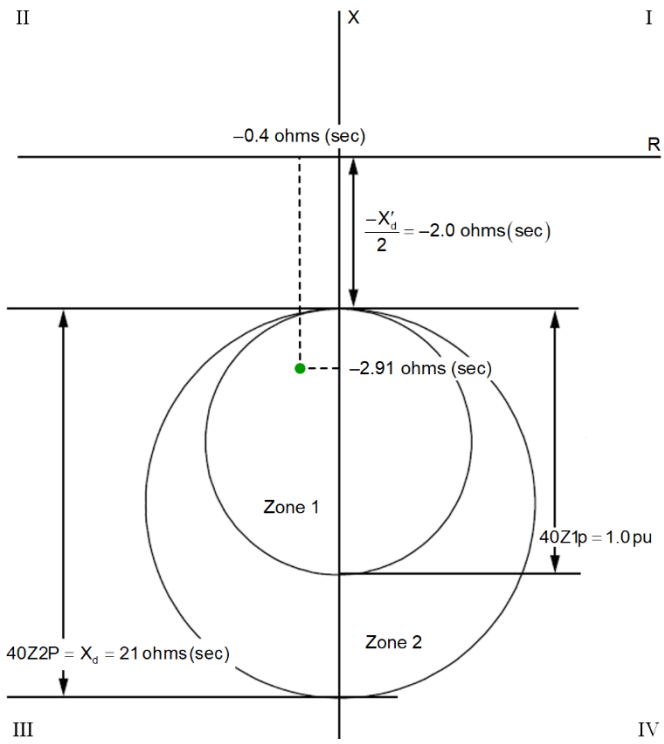


Fig. 28. Z1 during the case study LOF event.

Furthermore, based on the P and Q signatures shown in Fig. 27, it is evident that this was not an LOF event. However, the Z1 plot shown in Fig. 28 proves that the relay thought it was. The sequence components for voltage and current calculated by the relay are shown in Table 2, and can be used to understand the Z1 calculation taking place within the relay's algorithm. The expectation for normal, healthy operation when phase rotation is correct is such that the V1 and I1 should be similar to the phase voltage and current, respectively, and the negative-sequence voltage (V2) and current (I2) should be relatively low. V1 and V2 and I1 and I2 seem to be swapped, which is an indication that something is not correct for healthy generator operations. Recall that Fig. 27 shows the phase rotation to be ABC, per the generator wiring, but the phase-rotation setting on the relay for expected rotation, PHROT, is set as ACB, as seen in Fig. 29.Table 2's data shows us why the relay incorrectly calculated the resultant Z1 quantity for a normal generating mode, resulting in the incorrect Z1 calculation and the trip.

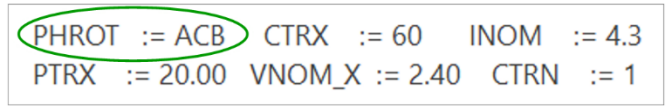


Fig. 29. Generator relay phase-rotation setting.

TABLE 2
SEQUENCE COMPONENTS FOR VOLTAGE AND CURRENT FOR THE LOF CASE STUDY

| Sequence Component | Name | Magnitude |
|---|---|---|
| I1 (Amperes) | Positive-Sequence Current | 20.7199 |
| I2 (Amperes) | Negative-Sequence Current | 200.58 |
| V1 (Volts) | Positive-Sequence Voltage | 20.3114 |
| V2 (Volts) | Negative-Sequence Voltage | 1185.61 |

Summary—In this instance, incorrect phase-rotation setting was the root cause of the event, resulting in the relay calculating an incorrect Z1 which led to a trip. Fig. 30 indicates the correct Z1 calculation that the relay would have seen if the correct phase rotation had been applied in the relay settings to match the generator phase sequence. Note that the Z1 is outside of Zone 1 and Zone 2 Mho characteristic.

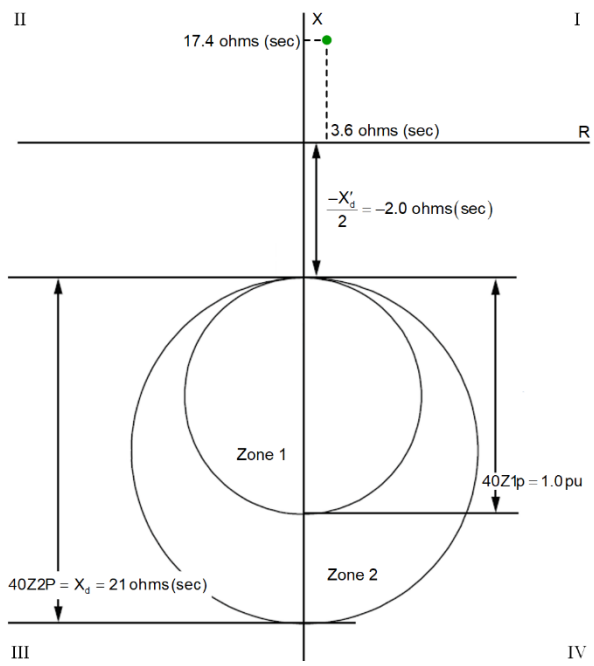


Fig. 30. Z1 plot during the case study LOF event with the correct phase rotation applied.

### *E. Missing Neutral Link Causes a High-Impedance Bus Differential Relay (87Z) To Misoperate for an Out-of-Zone Fault*

A bus differential protection scheme's operation is based on differential currents entering and leaving a bus zone. There are two types of bus differential protection schemes: high-

impedance and low-impedance. This section only covers an 87Z scheme; refer to [11] for more information about low-impedance bus differential schemes and the advantages and disadvantages of using one over the other.

*1) 87Z Theory*

The 87Z relay effectively presents a high impedance to the flow of differential current.

Fig. 31 shows a simple per-phase high-impedance bus differential protection scheme. The paralleled outputs of each of the CTs in each phase are connected to a common terminal and passed through the 87Z relay. This causes a voltage drop across the relay when there is a differential current. The 87Z relay is set to trip when there is a voltage drop across the relay, which is inherently extremely sensitive [11]. Depending on the manufacturer, the 87Z relay may include a set of nondirectional overcurrent elements to complement the differential protection.

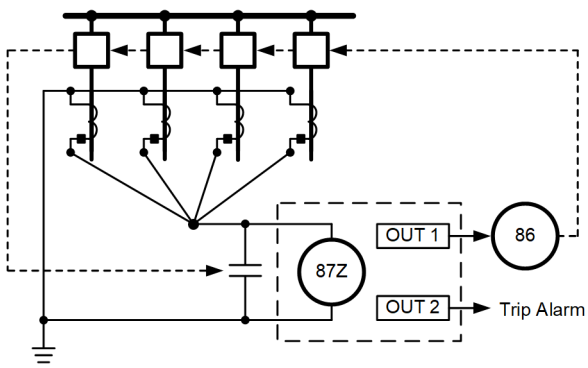


Fig. 31. Simple schematic of an 87Z scheme with paralleled CTs.

*2) Case Study*

Fig. 32 shows a 345 kV incoming transmission line stepped down to a 34.5 kV line that feeds a bus, which in turn feeds multiple feeders downstream. The 34.5 kV bus, highlighted in green, is protected by an 87Z relay. Thus, the relay should trip all breakers connected to the 34.5 kV bus if there is a fault detected in the defined protected zone. For any fault out of the protected zone, the relay should not detect any differential current and so should not operate. The system experienced a C-Phase-to-ground fault on Feeder 1. The relay protecting Feeder 1 tripped correctly because the fault was in its zone of protection. However, the 87Z relay also tripped for this out-of-zone fault.

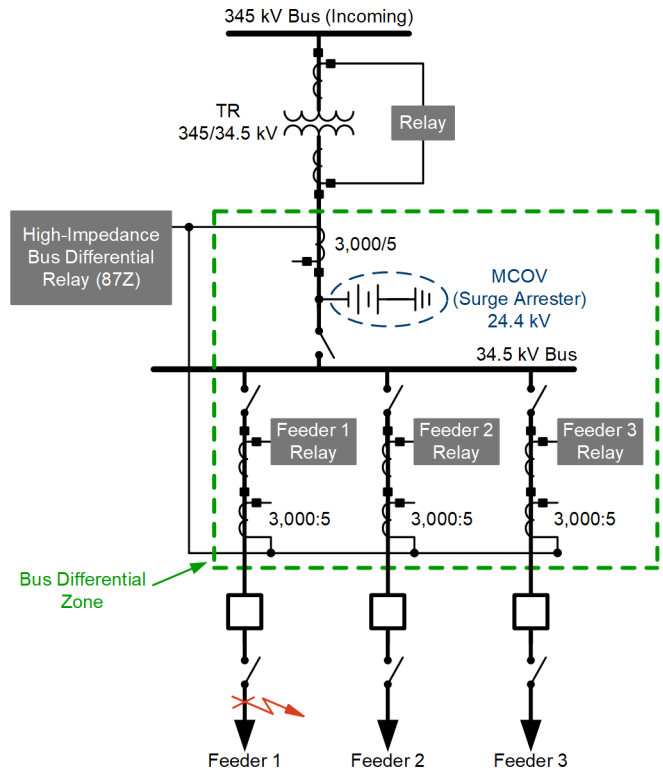


Fig. 32. Single line diagram for the case study.

The first step in the methodical approach to identifying the root cause was to determine whether the 87Z relay was applied correctly and if the installation requirements for an 87Z relay were satisfied [11][12]. It was confirmed that the criteria had been met.

Given that confirmation, suspicion grew that the misoperation might have been due to the lightning arrester in the protection zone. Because special considerations need to be taken while setting up an 87Z relay with lightning arresters in the bus protection zone [13][14], the settings file was reviewed to determine if the settings recommendations according to [14] had been followed for this application. In accordance with the recommendations, a delay in the trip signal had already been set to accommodate the lightning arrester conduction time. If a conduction counter, which counts every time a surge arrestor operates, had been present in the surge arrestor, it would have shown if the arrester had operated or not. Unfortunately, that was not the case.

Since there was no conclusive evidence to prove that the 87Z relay's misoperation was due to the lightning arrester conduction, focus shifted to the next probable cause. The next step was to investigate possible wiring errors. The 87Z relay applied in this case study had a set of current coils (i.e., nondirectional overcurrent elements) in series with the voltage coils (i.e., the 87Z element). Thus, analyzing the

differential current waveforms (top oscillography in Fig. 33) and voltage waveforms (bottom oscillography in Fig. 33), we noticed that the pre-fault oscillography appeared as expected, wherein the differential current and the differential voltage across the 87Z relay were both zero.

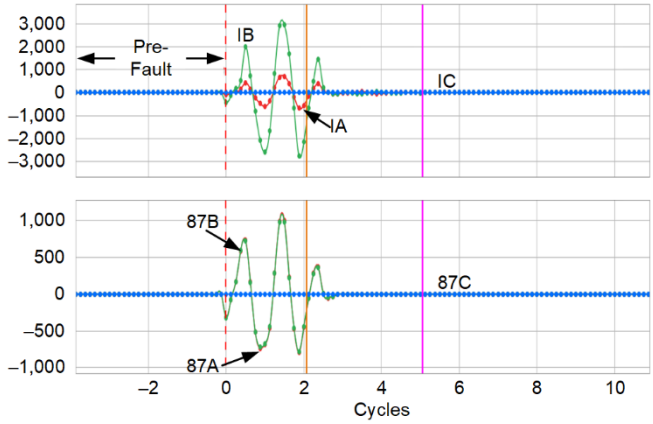


Fig. 33. 87Z relay, showing differential current and voltage waveforms.

At this point, a wiring error was ruled out, since that would more likely have indicated an unexpected analog quantity in the pre-fault event report. This was not the case.

The next step was to collect and analyze all event reports involved with the fault. When analyzing an event, it is always a good idea to collect event reports from any neighboring devices in the system [15]. Since the relay protecting Feeder 1 tripped at the time of this disturbance, an event report was captured.

Fig. 34 shows the currents seen by the Feeder 1 relay, with the differential voltages and currents measured by the 87Z relay. Note that the C-Phase-to-ground fault causes an increase in C-Phase current measured by the Feeder 1 relay, as expected, but causes the A- and B-Phase differential voltages and current to spike in the 87Z relay.

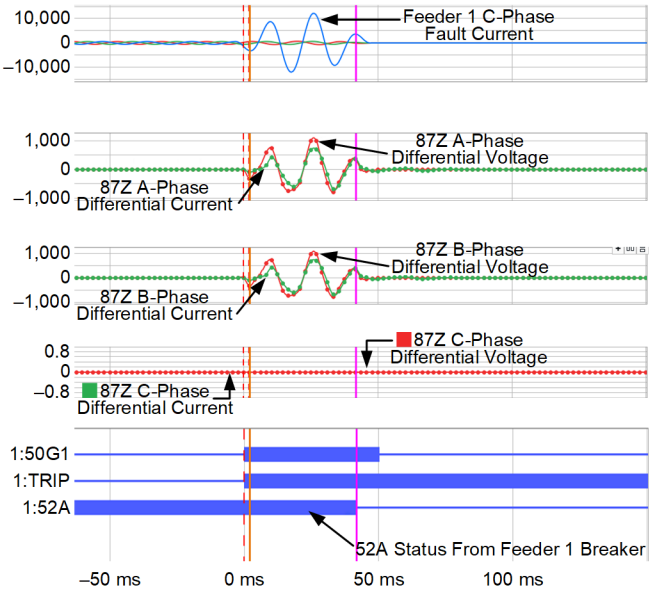


Fig. 34. Combined events from Feeder 1 relay and 87Z relay.

Furthermore, these differential voltages and current in the 87Z relay are sustained until the downstream fault is cleared and the downstream breaker is open. Note that the differential voltages and currents fall to zero when the Feeder 1 breaker opens (i.e., when the 52A status of the Feeder 1 relay deasserts). This further bolsters the idea that this misoperation was not due to the lightning arrester.

This led the investigation towards the suspicion that one of the sets of CTs connected to the 87Z relay may have had a missing neutral-to-ground connection.

A missing neutral-to-ground connection will cause the fault current to circulate through the non-faulted phase instead of flowing into the ground. Such a scenario is similar to what had been observed in this case. Fig. 35 depicts a C-Phase-to-ground out-of-zone fault, much like in the case study. The red arrows show the flow of primary fault current, the green arrows show the flow of CT secondary fault current, the blue arrows show the differential current flowing into the 87Z relay, and the orange arrows show the secondary fault current in C-Phase flowing through the non-faulted phases (A and B), which was due to a missing neutral-to-ground link. This hypothesis falls in line with the oscillography shown in Fig. 34.

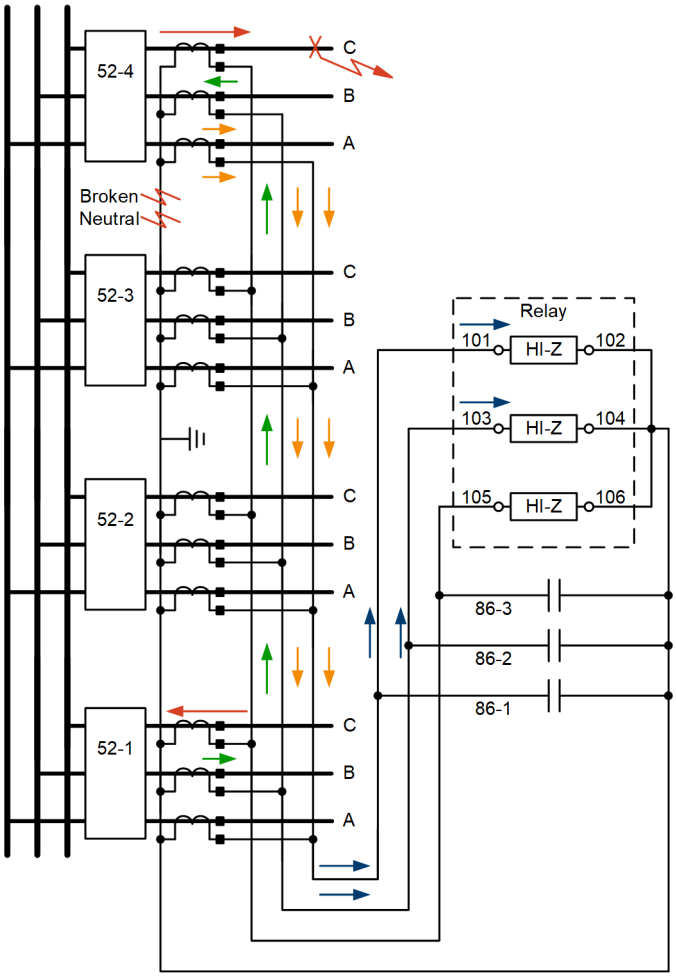


Fig. 35. Scenario of missing neutral link during an out-of-zone fault.

A missing neutral is only evident when there is an unbalance in the system, and in this case explains why there was no indication of wiring errors in the pre-fault window shown in Fig. 33.

Indeed, after thoroughly investigating the wiring, a missing neutral link was found to be the root cause.

Summary—A missing neutral link can cause fault current to flow through a non-faulted phase, thereby simulating a pseudodifferential current during through-fault conditions in a differential protection scheme. Such an occurrence can only be detected during unbalanced faults. Single-phase primary injection, as described in Section III and simulating unbalanced primary currents during commissioning or maintenance, would have caught this error and prevented this misoperation from happening.

## V. Conclusion

CT and VT connection errors can lead to undesired operations of protection systems. However, many of these operations can be avoided by adhering to industry standards and implementing tried-and-true field testing and commissioning practices.

This paper highlights several actual system events, where we learned that simple meter checks can identify connection errors in a VT circuit in a distance relay, that load checks can identify incorrect CT connections in a differential circuit.

We learned that VT grounding errors were discovered and corrected to secure a directional relay used in a DCB scheme, and that the phase-rotation setting was corrected after an LOF relay operation. Then, finally, we learned how a missing neutral wire, which led to a bus differential relay operation, was discovered and corrected.

It is our hope that this paper can serve as a guide and reference for identifying and reducing connection errors in IT circuits.

## VI. References


[1] G. Benmouyal, J. Roberts, and S. Zocholl, “Selecting CTs to Optimize Relay Performance,” *SEL Journal of Reliable Power*, Vol. 2, Issue 3, September 2011, pp. 127–135.

[2] IEEE C57.13.3-2014, IEEE Guide for Grounding of Instrument Transformer Secondary Circuits and Cases.

[3] K. Zimmerman and D. Costello, “Lessons Learned from Commissioning Protective Relaying System,” proceedings of the 62nd Annual Conference for Protective Relay Engineers, College Station, TX, March 2009.

[4] National Electric Code (NEC), 2017 Edition, *National Fire Protection Association*, January 2016.

[5] IEEE C2-2017 - 2017 National Electrical Safety Code(R) (NESC(R)), *IEEE Standards Association,* August 2016.

[6] O. Peterson, R. Scharlach, and C. Baltazar, “Proper Testing of Protection System Ensures Against False Tripping and Unnecessary Outages,” proceedings of the Pulp and Paper Industry Technical Conference, Birmingham, AL, June 2009.

[7] IEEE Std. 525-2016, IEEE Guide for the Design and Installation of Cable Systems in Substations.

[8] M. Boecker, G. Corpuz, J. Candelaria, and A. Hargrave, “Finding Common Ground: A Case Study of Phantom Currents and Ground Loops,” presented at the 47th Annual Western Protective Relay Conference, Virtual, October 2020.

[9] Schweitzer Engineering Laboratories, Inc., “SEL-311C Relay Protection and Automation System Instruction Manual,” July 2016. Available: selinc.com.

[10] M. Alla, A. Guzmán, D. Finney, and N. Fischer, “Capability Curve-Based Generator Protection Minimizes Generator Stress and Maintains Power System Stability," proceedings of the 45th Annual Western Protective Relay Conference, Spokane, WA, October 2018.

[11] K. Behrendt, D. Costello, and S. Zocholl, “Considerations for Using High-Impedance or Low-Impedance Relays for Bus Differential Protection," proceedings of the 63rd Annual Conference for Protective Relay Engineers, College Station, TX, March 2010.

[12] S. Zocholl and D. Costello, “Application Guidelines for Microprocessor-Based, High-Impedance Bus Differential Relays," proceedings of the 62nd Annual Conference for Protective Relay Engineers, College Station, TX, March–April 2009.

[13] K. Koellner, O. Reynisson, and D. Costello, “High-Impedance Bus Differential Misoperation Due to Circuit Breaker Restrikes," proceedings of the 67th Annual Conference for Protective Relay Engineers, College Station, TX, March–April 2014.

[14] L. Underwood, “Applying the SEL-587Z With Lightning Arresters Within the Differential Zone,” April 2007. Available: selinc.com

[15] D. Costello, “Lessons Learned Through Commissioning and Analyzing Data From Transformer Differential Installations," *IEEE Transactions on Industry Applications*, Vol. 44, Issue 4, pp. 979–1003, July 2008.


## VII. Biographies

**Marcel Taberer** joined Schweitzer Engineering Laboratories, Inc., as an application engineer in 2016. He previously worked for Eskom Power Utility in South Africa as a protection engineering technologist for nine years. He was responsible for commissioning and testing primary and secondary equipment in the distribution and transmission sector. He earned his Bachelor of Technology degree from Cape Peninsula University of Technology and his Master of Technology degree from Nelson Mandela University. He is a registered professional engineering technologist in South Africa and an IEEE member.

**Praveen Iyer** joined Schweitzer Engineering Laboratories, Inc., as an associate application engineer in 2019. He previously worked as a Junior Electrical Site Engineer for Ashoka Buildcon Ltd. from 2015 to 2019. He earned his BSEE degree from University of Pune, India, in 2015. He received his MS degree in Electrical Engineering, with specialization in power systems, from Michigan Technological University, Houghton, Michigan, in 2019.

**Karl Zimmerman** is a principal engineer with Schweitzer Engineering Laboratories, Inc., in Saint Louis, MO. He is an active member of the IEEE Power System Relaying Committee and chairman of the Line Protection Subcommittee. Karl received his BSEE degree from the University of Illinois at Urbana-Champaign. He received the 2008 Walter A. Elmore Best Paper Award from the Georgia Tech Relay Conference and the Best Presentation Award at the 2016 PowerTest Conference. He has authored over 40 technical papers and application guides on protective relaying.


20210304 • TP6999-01