Improvements in Generator Breaker Failure Protection During Low-Current Conditions

Matchyaraju Alla, Sumit Sawai, and Normann Fischer, *Schweitzer Engineering Laboratories, Inc.*

***Abstract*—When a synchronous generator circuit breaker (GCB) fails to open after a trip command, personnel safety is at risk and plant equipment can be severely damaged. The existing algorithms that are used to detect a circuit breaker (CB) open condition involve using the auxiliary contacts of the CB or an overcurrent threshold. The GCB auxiliary contacts are not always reliable, and the contacts may cause a security concern, whereas the overcurrent detector method has dependability issues for conditions involving low currents. The consequences of a false breaker failure operation on the power system are severe. This paper describes improvements in breaker failure schemes to increase the dependability and security for both the generator step-up (GSU) transformer low-voltage-side breaker application and the GSU transformer high-voltage-side breaker application. This paper presents real-world events and real-time digital simulations for validating the proposed breaker failure schemes.**

I. Introduction

The purpose of a breaker failure (BF) protection scheme is defined as backup protection should a circuit breaker (CB) fail to operate correctly during a fault clearing [1]. A BF can cause safety issues and jeopardize the stability of the power system. IEEE C37.119 [1] discusses the two primary CB failure modes, which are failure to open and failure to interrupt a fault.

The reasons for a BF can be related to the failure of either the primary components of the CB, such as an interrupter, interruptive media, operating mechanism, or isolators; or the CB control circuitry, such as an open-circuited trip circuit or CB trip coil or a short-circuited trip circuit or CB trip coil. The function of the BF protection scheme is to correctly identify the BF to trip or interrupt the fault condition. Once a BF condition has been established, the BF protection scheme must trip the adjacent CB to isolate the fault within the required critical clearing time. To achieve this, the BF scheme requires reliable and correct information about the status of the CB. One possibility of determining the status of the CB is to use CB auxiliary contacts such as the normally open contact (52a) or the normally closed contact (52b). However, current can continue to flow through the CB until the arc extinguishes on the final zero crossing, even when the CB poles are physically separated, as indicated by the 52a or 52b contact. One of the earliest BF schemes can be formed using an overcurrent detector (50BF) and an auxiliary contact, as shown in Fig. 1.

The idea is that when BF initiation (BFI) is received via a trip command from a protection device, the logic waits for the CB to open within the preset time (62BF), i.e., the fault current to drop below the set threshold (50BFP) and the CB 52a contact to deassert. Should the CB fail to open or interrupt the fault within the preset time (62BF), the current does not drop below the 50BFP threshold, the CB 52a contact does not deassert, and the logic issues a breaker failure trip (BFT). The BFT signal is typically sent to the bus protective relay, which then issues a trip signal to all associated CBs that are preconfigured to isolate the fault in the event of the CB failing. The trip signal can also be transmitted to the remote CB via direct transfer trip (DTT), as explained in Section IV. This tripping of the CBs is based on the configuration of the switchyard to which the generators are connected.

The issue with the scheme described in Fig. 1 is the reliability of the CB auxiliary contacts (52a and 52b). An investigation by the North American Electric Reliability Corporation (NERC) identified issues with using 52a and 52b contacts to indicate the status of the CB in BF protection schemes [2]. In the NERC report, there was an incident in which the BF protection scheme failed to operate when one pole of a CB (B-phase) failed to open because of a mechanical failure, but the 52a contact of B-phase indicated that the CB was open. To avoid such incidents, IEEE C37.119 [1] recommends a scheme that uses the OR combination of the 50BF and auxiliary contacts.

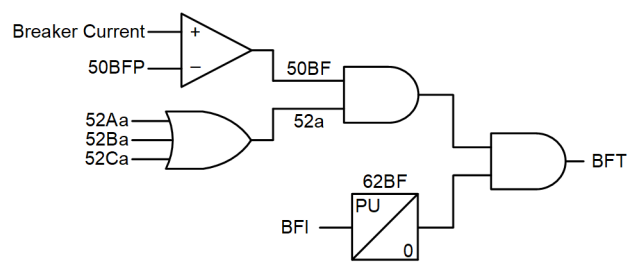

Fig. 1. Simple BF scheme

The BF protection scheme shown in Fig. 2 is more dependable than the scheme shown in Fig. 1, but it is less secure. For example, assume that the generator experiences a fault and issues a trip. The generator circuit breaker (GCB) trips and clears the fault, but the 52a contact remains asserted for some reason. The BF scheme shown in Fig. 2 would execute a BF trip incorrectly.

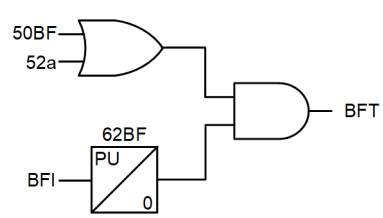

Fig. 2. Common BF scheme in use

It is common practice to have BF schemes implemented in a separate relay, which introduces a few challenges into the

scheme. If the BFI command is wired to the BF relay from the tripping relay, the wiring circuitry is susceptible to noise and may falsely assert the BFI input in the BF relay. If the 50BFP is set lower than the rated load current, spurious BFI caused by wiring or human error under a light load can cause BF tripping. Using the re-trip command may reduce the possibility of an unwanted BF trip.

To avoid an incorrect BF operation because of a spurious BFI and a low-set 50BFP, the 50BFP is set higher than the rated load current. However, this approach decreases the dependability of the scheme for faults where the current is lower than 50BFP (see Section III). This is the case for most of the generator faults. One could argue that the CB auxiliary contact can be used in low-current cases, but it is not always secure. Reference [3] describes an event where an undesired transient of the BFI input lasted for a quarter-cycle, latched in the command, and operated the BF scheme because of the 52a contact.

The BF philosophy of many utilities is to avoid BF scheme operation for currents less than the nominal current of the generator; therefore, the 50BFP usually is set higher than the nominal current. Some utilities avoid using auxiliary contacts in their BF schemes because of their unreliability, making the BF schemes vulnerable during low-current conditions.

In this paper, we present a new BF scheme that uses generator terminal power measurements for supervising the BF scheme. The paper also presents two alternative schemes that can be implemented in a generator protective relay.

II. BF Schemes for Generator Applications

This section details a present-day current-based (50BF) scheme, the impact of the current transformer (CT) location in the GCB failure, and the issues related to current-based schemes. Fig. 3 shows the BF scheme that uses a current-only method as it exists today in many BF application schemes. The logic can be explained as follows: the BFI signal is latched with the trip command, and both the BF timer (62-1) and re-trip timer (62-2) start timing. If the CB opens, 50BF deasserts before the 62-1 timer times out and the BF trip is not issued. However, if the CB fails to open, 50BF stays asserted until the timer (62-1) times out and the BFT is issued to trip the backup breakers. The additional open-phase detection (OPH) input to the AND gate secures the logic during the occurrence of subsidence current. Subsidence current is a secondary CT circuit phenomenon in which the current continues to flow in the secondary circuit of the CT even though there is no current in the primary circuit. The trapped energy in the CT core is the source of the subsidence current, which delays the reset of the 50BF [4]. The OPH detection uses the zero crossings of unfiltered current (i) and the zero crossings of the derivative of the unfiltered current (di/dt) for all three phases. The zero crossings of the di/dt are immune to subsidence. The OPH logic ensures the reset of 50BF in less than one power system cycle. Earlier BF schemes that did not use the OPH logic added an extra delay to the BF scheme to account for the delayed 50BF deassertion. Any extra delay in the BF scheme results in an increase in the total clearing time, which impacts system stability.

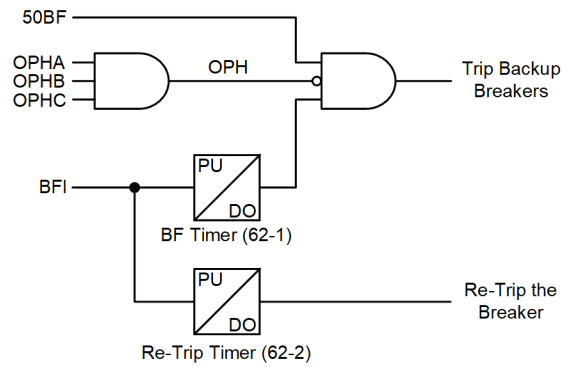

Fig. 3. Present-day BF scheme

The purpose of the 62-2 timer is to issue the re-trip command to the same CB through a different set of trip coils to eliminate the failure of the CB trip circuitry. Some protection schemes supervise a re-trip with 50BF. IEEE C37.119 [1] provides more details on the re-trip-based BF schemes.

A. CT Locations Determine the Security of BF Schemes

Use caution when selecting the location of the CTs that are used as inputs to the 50BF in a generator BF scheme [1] [3]. Do not use generator neutral-side CTs (CT-X in Fig. 4 and Fig. 5) for generator BF schemes because the generator continues to supply current for an in-zone fault until the stored energy in the field winding dissipates, even after the GCB successfully opens. This results in an unwanted BF trip. As shown in Fig. 4 and Fig. 5, CT-X detects the fault currents for faults at Locations 1, 2, 3, and 4 even after the CB (both CB-1 and CB-2 in Fig. 4, and CB-3 in Fig. 5) opens, whereas CT-T sees the fault current for faults at Locations 2, 3, and 4. Ideally, the CTs are located locally so that they always measure the current flowing directly into the CB. Hence, for the generator shown in Fig. 4, two separate BF schemes are required, one for CB-1 that derives its current input from CT-U and one for CB-2 that derives its current input from CT-Y. For the generator configurations shown in Fig. 5, only one BF scheme is required, and it derives its current input from CT-T.

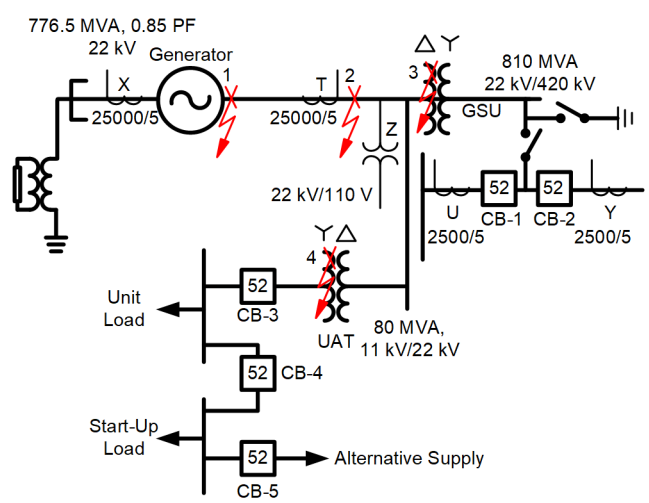

Fig. 4. GCB located on the high-voltage (HV) side of the generator step-up (GSU)

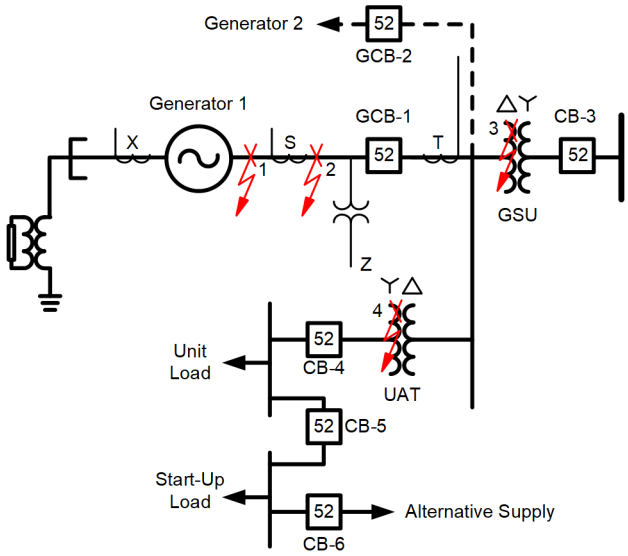

Fig. 5. GCB located on the low-voltage (LV) side of the GSU

B. *Dependability of 50BF if 50BFP Is Set Above the Rated Load Current*

Most power system generators are high-resistance grounded, so phase-to-ground faults in either the generator or LV (delta winding) of the GSU result in low-magnitude fault current, typically less than 15 A.

Turn-to-turn faults in the generator or GSU winding result in large fault currents, typically 5 to 9 times the rated current flowing in the shorted turn(s) [5]; however, the increase in the generator or transformer terminal current (measurable current) is negligible. Therefore, a BF scheme that requires a minimum current greater than the current produced by the fault fails to provide any CB failure protection.

In general, there are only a few generator faults or adverse operating conditions that produce enough measurable fault current to successfully verify a CB failure. These are phase-to-phase or three-phase faults, inadvertent energization, etc. The appendix contains a table that lists some typical generator fault or adverse operating conditions and whether they supply sufficient current to initiate a 50BF scheme (for example, the phase-to-phase faults close to the neutral-side terminals of a generator, as described in Fig. 6). The terminal- and neutral-side currents shown in Fig. 6 were captured during a stage-fault testing of an 8.8 megavolt-amperes (MVA), 4 kilovolts (kV), four-branch per-phase hydro generator [5]. The generator differential protection element rapidly detected the fault conditions because of the high-magnitude currents measured by the neutral-side CTs (approximately 6 per unit (pu)). The currents at the terminal of the generator are however only approximately 0.2 pu, so the 50BF element cannot assert if the GCB fails to open and clear the fault. Fig. 6 also shows the calculated active (P) and reactive (Q) power at the terminals of the generator. Note that the rate of change (d/dt) of P is lower than the rate of change of Q at the instance of fault. We will recall this observation when examining the new proposed power-based BF scheme in Section IV. Generator stator and transformer turn-to-turn faults and phase-to-phase faults produce high-magnitude fault currents and must be detected and isolated as quickly as possible to prevent catastrophic failure irrespective of the CB currents.

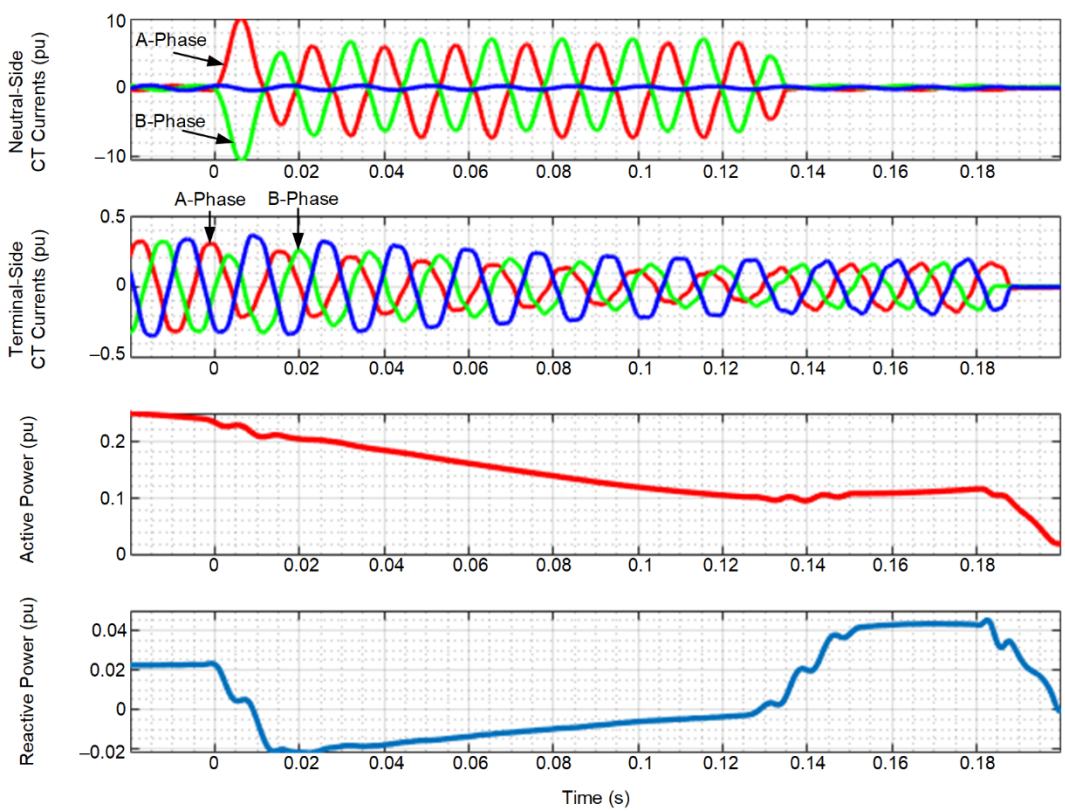

Fig. 6. A-phase (1.389 percent of total winding) to B-phase (2.778 percent of the total winding) fault close to the neutral terminal of the generator

As shown in Fig. 6, trips generated by the differential element do not guarantee that the current exceeds the 50BF element threshold and therefore fail to engage the BF scheme.

It is not possible to set the current threshold of the 50BF element so that the element remains both secure and dependable under these conditions. If the BF scheme uses the status of the CB auxiliary contacts, 52a, under these conditions, the security of the scheme is called into question because of either the contacts providing the incorrect information or the wiring associated with these contacts being incorrect. Reference [6] discusses a misoperation of the BF scheme based on the 50BF element and the CB 52a auxiliary contact. The incorrect wiring of the BF scheme results in all the associated CBs being tripped, which, in turn, leads to a major utility blackout. The CB auxiliary contacts, 52a or 52b, can also create a security issue during routine CB maintenance if the BFI signal is sealed in for a duration longer than the BF time. Furthermore, for cases like a CB flashover, initiation of the BF scheme does not occur.

C. Breaker Flashover Protection

GCBs have experienced several cases of CB flashovers for various reasons [1]. Because the CB flashover occurs when a CB is open, even though the 50BF element asserts, the BFI signal is not present. To address this issue, a modification is required to supplement the BFI signal, as shown in Fig. 7 [7]. Most GSUs are delta-wye connected (HV side leads the LV side), and whenever a flashover occurs on one or two poles of the GSU HV-side CB, the CT in the neutral bushing of the GSU sees the current. This current detection, in conjunction with the status of the CB auxiliary 52b contact, can be used to supplement the BFI. Following the CB flashover, the 50FO element asserts, and if the current through the breaker has enough magnitude for 50BF to assert, a CB failure is declared. It is recommended to use a CB 52b auxiliary contact and not the negated 52a contact because with the failure of the 52a contact, the negated 52a contact keeps the BFI armed and any fault involving ground (e.g., phase-to-ground) may assert 50FO and 50BF, resulting in a misoperation [3].

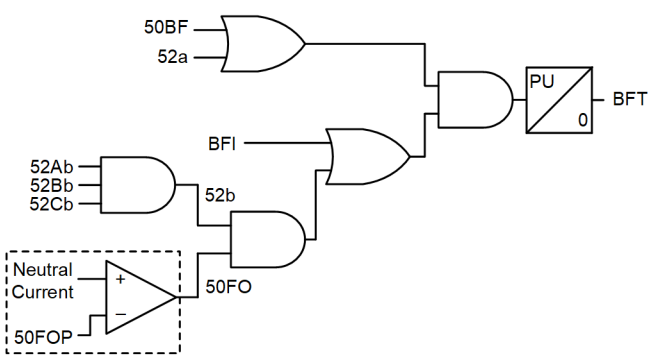

Fig. 7. Modified BF logic for breaker flashover protection

Note that a GCB flashover is not common and having a simultaneous incorrect status indication from the CB 52a auxiliary contact is highly improbable. Though the probability of such an occurrence is rare, the consequences of such an incident can result in severe damage to the generator.

III. Generator Trip Schemes

To provide a dependable and secure BF scheme, one must understand the tripping schemes of the GCB, field CB (FCB), and the turbine. Generators may shut down for unplanned (faults or abnormal operating conditions) or planned reasons. In most generator protection schemes, operation of the generator protective relay results in one of the following occurring [1]:

1. Unit Separation: Separation of the generator from the power system (island unit). Only the GCB trips but the excitation system and the turbine remain in operation.
2. Generator Tripping: Separation of the generator from the power system and de-energization of the field, i.e., the GCB and FCB are tripped but the turbine remains in operation.
3. Simultaneous Trip: Total shut down of the generator. This means simultaneously tripping the GCB, FCB, and turbine.

Trip Scenarios 2 and 3 also initiate the transfer of the auxiliary power supply from the unit supply (feeding from the generator) to an alternative supply (feeding from the station). Most hydro generation plants do not have any auxiliary plant like coal mills, boilers feed pumps, etc.; therefore, they do not require a transfer. Generators that have the GCB located on the LV side of GSU, as shown in Fig. 5, also do not require the transfer of the auxiliary plant to an alternative source.

The shutdown of a steam-driven generator falls into a different category of tripping known as sequential tripping. Generators driven by steam turbines are designed to operate as base load generation; therefore, they are not tripped frequently. Furthermore, these turbine units are very sensitive to any kind of over-speeding.

The sequential shutdown scheme shown in Fig. 8 works on the principle that if a turbine trip command is issued, the turbine fast-operating valves shut off the steam to the turbine, causing the generator to motor (P is negative). If the turbine valve closed indication is received together with the generator motoring detection (32RP as shown in Fig. 8), the generator protective relay trips the GCB and FCB and initiates the transfer command. Note that $32RP_{TH}$ is set to a small motoring power value [1]. If a planned shutdown occurs, the operators gradually reduce the load according to the shutdown requirements provided by the turbine manufacturers to reduce the thermal stress on the overall unit. In this case, the turbine trip is initiated when the load is less than 0.05 to 0.1 pu of the generator rating. So, the transfer of the auxiliary plant is initiated prior to tripping the turbine. But if there is a problem in the turbine or boiler, the operator trips either the boiler or the turbine to cause the generator relay to issue the trip command to the GCB and FCB and initiates the transfer of the auxiliary plant to an alternative source. Some utilities use low forward power (LFP) during a sequential shutdown instead of reverse power. Sequential shutdown can extract the trapped steam energy in the turbine and piping to avoid over-speeding of the turbine, increasing the life of the turbine and the bearings.

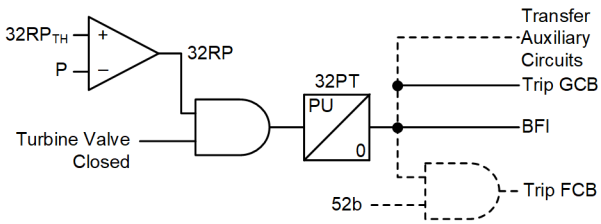

Fig. 8. Sequential tripping scheme

Some utilities practice a slight modification to the sequential shutdown. In such cases, tripping the FCB requires a GCB open indication, as shown by the dashed line in Fig. 8. When the generator transitions to motoring mode, the relay issues a trip command to the GCBs and the GCBs open. If the GCB auxiliary contacts indicate an incorrect status, the incorrect status of the GCB auxiliary contact (52a and 52b) prevents the tripping of the FCB. While the turbine decelerates with excitation on, overexcitation of the generator, GSU, and UAT can occur. The overexcitation (24) limiters in the excitation system can prevent this condition. Note that the overexcitation condition can reduce the life of the generator. In addition to avoiding this potential pitfall, simultaneously tripping the FCB has the advantage of having a de-excitation circuit, which is described in the following section.

A. De-Excitation Circuit

The direct-axis open-circuit transient time constant (T'_{do}) of a synchronous generator is the ratio of the field self-inductance (L_{fd}) and dc resistance (R_{fd}), as shown in (1) [8].

$$T'_{do} = \frac{L_{fd}}{R_{fd}} \tag{1}$$

T'_{do} is typically a few seconds; this limits the rate-of-change of the field current, which in turn results in the slow decay of the voltage at the generator terminals (i.e., for any internal generator faults, the generator airgap flux provides the EMF, which is directly proportional to the field current). The generator residual EMF drives the fault current in the generator stator windings after the generator is disconnected from the grid.

Therefore, the generator field circuit uses a de-excitation circuit to quickly discharge the energy stored in the field circuit. The discharging resistor can be either a linear or non-linear resistor, depending on the application [9].

The time constant that considers the discharge resistor in the discharge circuit is given by (2).

$$T'_{do} = \frac{L_{fd}}{(R_{fd} + R_d)} \tag{2}$$

where R_d is the resistance of discharging resistor.

Equation (3) gives the average dc output (V_{dc}) of a six-pulse rectifier bridge.

$$V_{dc} = 1.35 \bullet V_{ac} \bullet \cos\alpha \tag{3}$$

where:

α is the firing angle.

V_{ac} is the excitation transformer (ET) rated secondary line-to-line voltage.

Some modern de-excitation systems also use the inversion capability of the converter by increasing the firing angle beyond 90 degrees. Upon the receipt of the excitation off command from the relay, the firing angle of the converter shifts to inverter mode (for field energy feedback) and the de-excitation resistor switches in parallel to the rotor winding so that the generator can quickly discharge through the converter and the de-excitation resistor or the ET windings. As shown in (3), V_{ac} and α determine the maximum field voltage (V_F) that can be attained during voltage inversion. If the V_{ac} is high, V_{dc} is also high, which in turn causes a faster decay of the terminal voltage.

Fig. 9 shows the recordings of a de-excitation event of a generator during commissioning. Table I shows the important parameters of the generator.

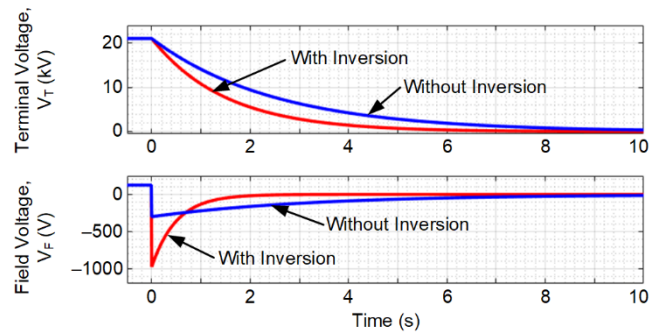

Fig. 9. De-excitation of a 22 kV, 776 MVA, 0.85 power factor (PF) steam turbine generator

TABLE I
EXCITATION SYSTEM DETAILS

T'_{do} (Seconds)	**Field Current (Amperes)**		**Field Voltage (Volts)**	
	No Load	Full Load	No Load	Full Load
9.65	1600.00	4476.00	140.00	467.20

We can infer from Fig. 9 that the decay of V_T is faster than when inversion is used compared to the case when only a discharging resistor is used. Fig. 9 also shows that the negative voltage of V_F is 1000 V (short-time rating of the excitation circuit). This is more than twice the V_F required for rated load conditions, as shown in Table I.

Inversion operation is only possible with a full-bridge rectifier, i.e., a six-pulse rectifier. It is not possible with a half-bridge rectifier nor a brushless excitation system. Most utilities prefer to initiate simultaneous tripping of the GCBs and FCBs to enable rapid discharge of the field.

The following section discusses a real shutdown event in which the trip command was issued simultaneously to the GCB and the FCB but the GCB failed to open.

B. Shutdown Event

When the FCB opened and the de-excitation circuit was inserted in the field, the generator absorbed both P and Q from the power system, operating as an induction motor. Fig. 10 shows a plot of P and Q drawn from the generator. The operating staff expected the generator protective relay to open the GCB. Because it was a shutdown event, the engineering

team could have checked the relay and manually opened the adjacent GCBs, but as shown in Fig. 10, the generator motored for more than 21 minutes. With no field applied to the generator, the internal voltage of the generator was approximately zero, resulting in the generator absorbing Q approximately equal to V_T^2 / X_d [10], where X_d is the direct axis steady-state reactance. In this event, the generator absorbed 0.453 pu of Q, which is approximately equal to $0.97^2 / 2$. The amount of P drawn from the power system to motor the generator is approximately 0.016 pu.

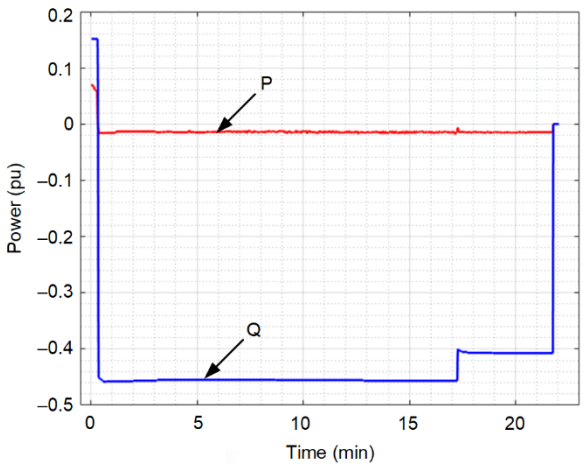

Fig. 10. P and Q recordings of a 300-megawatt (MW), 0.85 PF, 15 kV generator whose GCB failed to open

Table II shows the first 5-second recording of a distributed control system (DCS). We can infer that it takes 2 seconds for the generator to begin motoring from a load of 0.057 pu.

TABLE II
FIRST 5-SECOND MEASUREMENTS

Time (s)	P (Megawatts)	Q (Megavolt-Ampere Reactive)
0	20.43198204	53.3862648
1	4.371456146	53.3862648
2	–3.37456965	21.9332428
3	–2.28405309	–119.31768
4	–5.80016422	–158.472672
5	–5.57164431	–159.389343

Using Fig. 11, which shows the results of a similar condition simulated in a real-time digital simulator (RTDS), we can see that for a steam turbine generator, the decay of P after the turbine is tripped is slower than the decay of Q after the excitation is tripped and the de-energization circuit is inserted.

In Section IV, we show how to use these observations to improve the BF scheme.

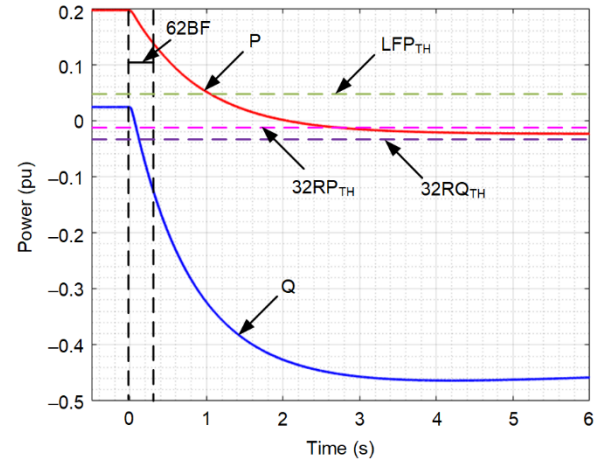

Fig. 11. RTDS simulation of a 555 MVA steam turbine generator simultaneous trip

IV. BF SCHEMES FOR LOW-CURRENT CONDITIONS

This section describes the BF schemes that are generally available in present-day generator protective relays. Generator protection schemes usually use dual main protective relays to increase the dependability of these schemes in case one of the relays fails. By implementing the BF scheme in each of the dual main relays, the BF trips from the relays can be directly wired to a relay that is correctly preconfigured to trip the associated CBs. This method avoids the spurious BFI issues and errors associated with the dc wiring circuit, as described in Section II.

A. Auxiliary Contacts-Based BF Scheme

As mentioned in Section I, CB auxiliary contacts can be used in instances where the fault current magnitude is less than the 50BF element threshold. Fig. 12 shows the CB auxiliary contact status logic that can be used to increase the dependability of BF schemes. Numerical relays can be wired to receive both 52a and 52b contact inputs. These contacts can be supervised with the OPH logic to generate an auxiliary contact discrepancy alarm (52AL) in the event of any wiring failures. This scheme is more dependable and secure when compared to a scheme that only uses a single 52a or 52b auxiliary contact. The breaker close indication (52CL) asserts when 52a OR NOT OPH is true. This scheme provides a better status indication if there are any issues related to the CB auxiliary contacts or associated wiring. However, this scheme loses security or dependability if there are any CB mechanical failures or if the current magnitude is less than 0.04 pu of the I_{NOM} (OPH threshold). Note that for this paper, I_{NOM} refers to the CT nominal secondary current.

If 52AL is monitored and the operating staff acts on this alarm as soon as it occurs, the likelihood of an incorrect BF is considerably reduced.

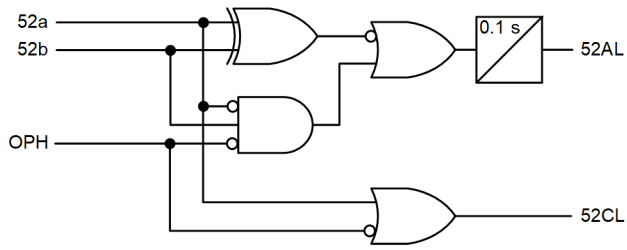

Fig. 12. Breaker status and alarm logic

B. Voltage-Based BF Scheme

If the generator protective relays include a synchronism-check function and have access to the potential transformer (PT) from both terminals of the GCB, we can use the scheme shown in Fig. 13 to identify the BF condition under low fault current conditions. The principle behind this logic is that if the breaker fails to open upon receipt of the trip command, the generator and the system stay synchronized. Ideally, there should be no slip frequency and no angle and magnitude difference between the voltages on either side of the CB. The CB synchronism check (25BF) shown in Fig. 13 can be used in the BF scheme in conjunction with the BFI input.

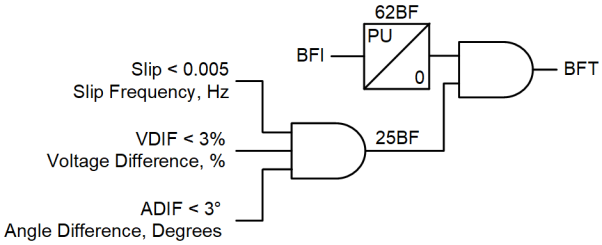

Fig. 13. Synchronism-check detector-based BF scheme

A typical setting of 15 to 60 cycles for 62BF is recommended in this scheme [11]. Most of the synchronization schemes use single-phase voltages on both sides of the CB. This scheme may lose dependability for a CB single-pole stuck conditions on the LV side of the GSU and also for a CB on the HV side of the GSU if the stuck pole is not on the same phase as the synchronizing PT pole.

C. New Power-Based BF Scheme

The idea behind this scheme is as follows: if a trip command is issued to the GCB, the FCB, and the turbine for any reason, the turbine and the FCB successfully trip but the GCB fails to open. The FCB opens and inserts the de-energization circuit. This results in the generator absorbing a large amount of Q but still exporting power greater than the low forward threshold (LFP_{TH}) for a short time because of the steam trapped in the turbine and piping. Thereafter, the generator goes into motoring mode, absorbing low P. At this point the generator has basically become a lightly loaded induction motor, as shown in Fig. 11.

Most modern generator protective relays are connected to CTs at the neutral side, and the terminals of the generator, and to CTs at the HV side of the GSU. The proposed scheme provides two paths to initiate the BF scheme. One path detects the BF condition by using the traditional 50BF method that uses the GSU HV-side breaker currents (see CT-U and CT-Y in Fig. 14). Set the 50BFP threshold to 0.05 pu of I_{NOM} because the scheme is implemented in a generator protective relay; there is no concern for unwanted or unexpected BFI assertion.

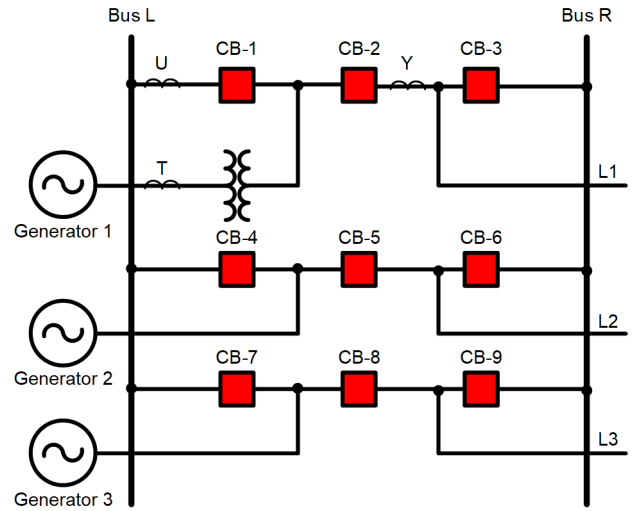

Fig. 14. One-and-a-half breaker scheme

The other path, GENBFP (power-based) shown in Fig. 15, uses P, negative-sequence current (I_2), and dc offset in the currents to provide a dependable and secure BF scheme for low-current conditions. This path uses the current measurements from the generator terminal CT (CT-T shown in Fig. 14) for calculating P, I_2, and dc offset. The GENBFP logic is only active for faults when the measured positive-sequence current (I_1) is less than 0.5 pu because 50BF at the GSU HV side operates reliably for currents higher than approximately 0.3 pu, as explained later in this section. This way, both the generator terminal and the GSU HV-side terminal current pickup settings overlap, thus providing a dependable BF protection.

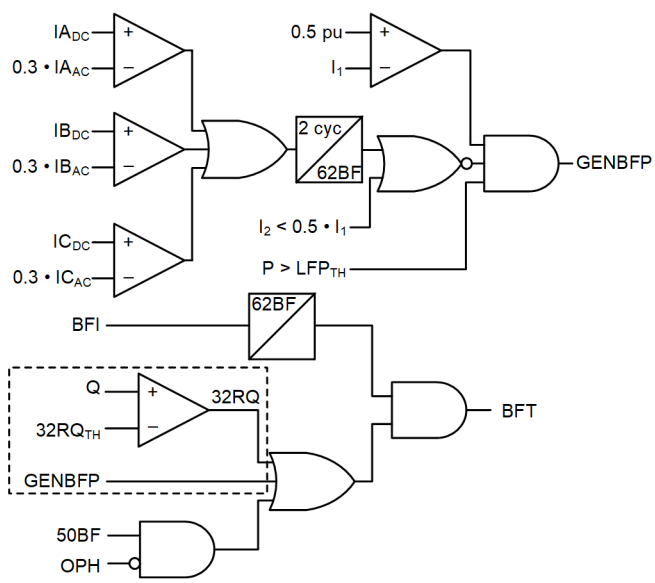

Fig. 15. Modified generator breaker fail scheme with power-based logic

This scheme must be blocked for phase-to-phase and three-phase faults between the measuring CT and the CB, as described in Section II. Using Fig. 4 from Section II as an example, for faults at Location 2, 3, and 4, CT-T measures currents irrespective of the status of CB-1 and CB-2.

For a phase-to-phase fault, I_2 and I_1 are approximately equal in magnitude. Three-phase faults are identified if at least one of the phases has a dc current component greater than 30 percent of the phase current for 2 cycles. The I_2 threshold secures the logic against phase-to-phase faults and the dc current check secures the logic for the three-phase faults at the aforementioned locations. Any dc-check assertion blocks the GENBFP path for the duration of 62BF.

For a better understanding, apply the proposed scheme in Fig. 15 to a one-and-a-half breaker scheme (shown in Fig. 14) by using the generator and CT parameters from Fig. 4.

For the generator shown in Fig. 4, the rated current on the GSU LV side is 20.37 kiloamperes (kA) and 1.067 kA on the GSU HV side. One might assume that the GSU HV-side CTs (CT-U and CT-Y) are overrated at 2500/5. Because these CTs are designed to measure the bus-rated current but not the generator-rated current. In the worst-case scenario, these CTs should measure the rated current of two similar generator units (2.135 kA). As explained previously, if we consider the 50BFP setting equal to 250 milliamperes (mA) (for a 5 A CT), the worst-case current that can be measured by these two CTs combined is 500 mA (ignoring any CT errors).

When measured from the generator terminals, the same 500 mA current corresponds to 0.95 A (i.e., 0.19 pu of I_{NOM}) and the apparent power at the generator terminals is 181 MVA (i.e., 0.23 pu of rated power). This means that for a current less than 0.19 pu of I_{NOM} at the generator terminals, 50BF at the GSU HV-side current cannot determine if the GCB is open. If the relay issues a simultaneous trip (trip command to the GCB, FCB, and turbine) for any fault or condition, the P measured at the generator terminals becomes zero within 10 cycles (typical 62BF timer pickup setting), provided that the GCB opens. If the GCB fails to open, the large inertia of the turbo generator (even though the turbine is tripped) means that the P cannot go less than the LFP_{TH} (which is 0.042 pu of the rated power, i.e., 33 MW in this case) in 10 cycles, as shown in Fig. 11. As illustrated in Fig. 10 and Fig. 11, the generators take several seconds before motoring, so the active power-based logic can provide a dependable BF condition before the generator transitions into motoring mode.

During a sequential shutdown, if the generator motors at approximately 0.013 pu of the rated power, i.e., 10 MW, the current at the generator terminal at unity power factor is 52 mA (0.01 pu of I_{NOM}). Practically, 32RP implemented in the numerical relay can detect and issue the trip command to the GCB and FCB and also initiate the BF scheme shown in Fig. 15 [12]. For sequential shutdowns, [3] proposes a BF scheme based only on reverse power; however, the BF scheme presented in this paper has two distinct inputs to the AND gate. The first input initiates the BF scheme, typically a protection trip (in this case, 32RP). The second input qualifies the initiate signal (32RQ).

After issuing the trip command, if the generator absorbs any Q less than the reverse reactive power threshold ($32RQ_{TH}$, which is set to 0.05, as shown in Fig. 11), the scheme issues the BF trip command by using 32RQ. As shown in Fig. 6, turn-to-turn and phase-to-phase faults close to the neutral terminal of the generator absorb the low reactive power from the system. Once the FCB trips, the generator rapidly absorbs Q greater than $32RQ_{TH}$. This path acts as a backup for the cases where GENBFP is blocked.

The same logic can be used to detect a stuck single-pole CB on the HV side of the GSU. This condition appears as a phase-to-phase fault on the GSU LV side, and the generator continues to operate as an induction motor.

D. Important Considerations for the New Power-Based BF Scheme

1) Load Commutated Inverter Start of Combustion Gas Turbines

Combustion gas turbines (CGTs) do not require a sequential shutdown. The CGT operator opens the GCB breakers during a shutdown at any rated load. The motoring power required by a CGT is greater than that for hydro or steam units because of the CGT compressor. If the fuel supply is shut off while the GCB is closed, the gas turbines rapidly transition from generating to motoring mode and can absorb more than 0.5 pu of P [7]. The BF scheme can depend on the 50BF to supervise the BF condition.

CGTs can use a load commutated inverter (LCI) for starting purposes; therefore, while starting, the generator absorbs both P and Q until the generator reaches a speed at which the CGT is self-sustaining, after which, the LCI static switch opens and isolates the LCI circuit. If during the LCI starting sequence there is a fault in the generator, the trip command isolates the LCI circuit; therefore, the power-based BF scheme is not required for this application [3].

2) Auxiliary Unit Power Supply

If the trip command is issued simultaneously to the GCB, FCB, and turbine, the generator protective relay issues a transfer command open CB-3 and close CB-4 (i.e., transfer the unit load to an alternative supply [see Fig. 4]). Should CB-3 fail to open when the transfer command is issued, CB-4 now not only supplies the unit load but also supplies the motoring power to the generator. The magnitude of the current supplied by the alternative power supply is high enough to qualify 50BF in the CB-3 BF scheme because the rating of the UAT is much smaller than the generator. Therefore, the BF scheme for CB-3 addresses this scenario.

3) *Failed Breaker Selectivity*

For the scheme shown in Fig. 14, the power-based method and the synchronism-check-based method cannot identify if the BF is in CB-1 or CB-2. To increase the dependability, [11] proposes a scheme that uses auxiliary contacts to identify the failed breaker.

One can also use the current-based method to select the correct breaker. Fig. 16 shows the failed breaker identification based on the current measurement. It is rare for both CB-1 and CB-2 to fail simultaneously, so the current-based method can be used reliably for breaker selectivity. The first input to the OR gate comes from the 50BF-based scheme and has no problem regarding breaker selectivity, so it can be applied to directly trip the CB. The second input to the OR gate comes from the power-based or the synchronism-check-based method (low-current BF scheme), and it is monitored using the current of the CBs. For a 1 A nominal CT, the relay can practically measure 3.3 mA, which is 0.0033 pu of I_{NOM}. As shown in Fig. 16, if one of the breaker currents (e.g., ICB1) is more than 0.01 pu of I_{NOM} and another breaker does not see any current (e.g., ICB2), the corresponding breaker (CB-1) can be identified as the failed breaker.

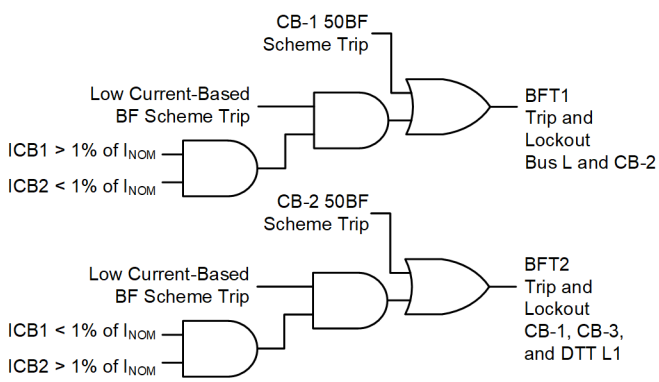

Fig. 16. Dual-breaker scheme logic

E. *Special Considerations for GSU LV-Side Breakers*

For the generator breaker on the LV side of the GSU, the breaker current (CT-T in Fig. 5) provides the complete BF protection for three-pole or two-pole failure-to-open conditions. However, if one of the GCB poles fails to open, the failed pole condition cannot be detected by any one of the BF schemes listed previously. Fig. 17 is used to analyze the effects of a single-pole failure to open on the LV side of the GSU.

This is similar to a high-impedance ground fault on an ungrounded power system. The parasitic capacitance of the generator and system provides a path for the current. The generator stator distributed ground capacitance (C_G) is split equally between the neutral and terminal of the generator, as shown in Fig. 17. The capacitance contribution from the GSU, surge arrestors, isophase bus, and other connected equipment is represented by C_X. In general, C_X (typically 0.09 μF) is considerably smaller than C_G (typically 0.297 μF).

A turbine trip causes the generator to coast down, and a trip of the FCB results in the insertion of the field discharging resistor. The insertion of the field discharge resistor results in the flux in the generator decreasing, which in turn decreases the generator terminal voltage. Once the flux in the generator has completely decayed, the phase voltages at the generator terminals become identical, meaning only the zero-sequence voltage (V_0) is present and the positive- (V_1) and negative-sequence voltages are zero. The magnitude of V_0 is dependent on the resistance of the neutral grounding resistor and the parasitic capacitances of the generator and the power system. However, at the same time, the voltages of the opened phases on the GSU side of the CB increase, as shown in Fig. 18.

Fig. 19 shows the 3V0 and V_N measurements at the locations shown in Fig. 17. The generator $3V0_G$ and the system $3V0_S$ measurements are similar to a high-impedance ground fault on an ungrounded power system and thus responds to the single-pole stuck conditions on a GSU LV-side breaker.

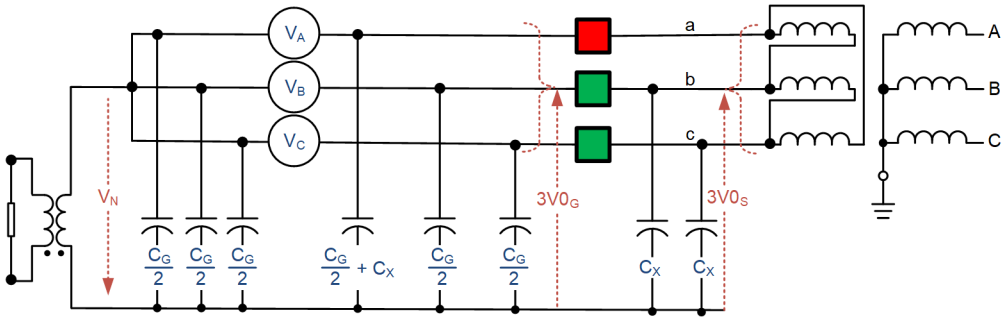

Fig. 17. Generator equivalent circuit with the capacitances and voltage measuring locations

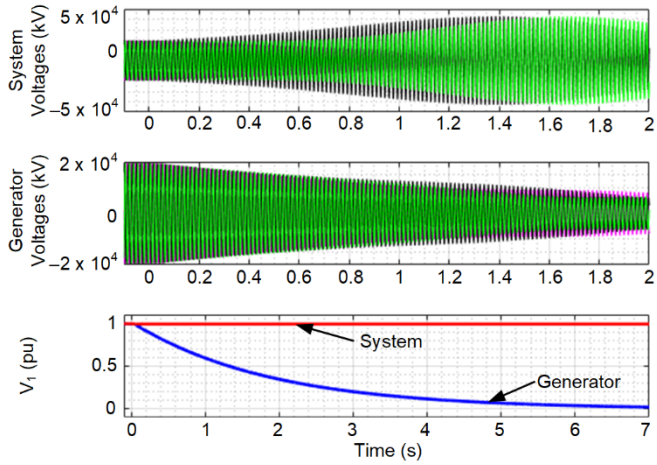

Fig. 18. RTDS simulation of a single-pole stuck condition on a GSU LV-side breaker of a 22 kV, 500 MVA generator

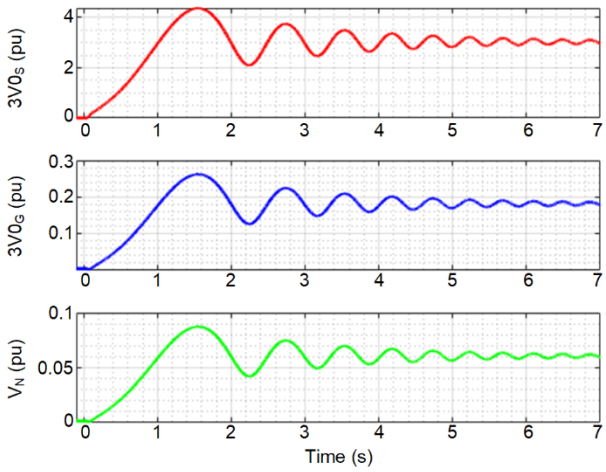

Fig. 19. Voltage measurements during a single-pole stuck condition on a GSU LV-side breaker

To identify a single-pole stuck condition, consider two scenarios. The first scenario only has one generator connected to the GSU, and the second scenario has multiple generators sharing a common GSU as shown in Fig. 5. A ground fault is detected by the presence of V_0; however, we cannot identify the location of the fault, e.g., in the generator, in the LV winding of the GSU, or on the bus.

For the first scenario, when a ground fault is detected, both the GSU LV-side and GSU HV-side CBs trip. Because the location of the ground fault is not known, sequential or staggered tripping of the CBs can assist in identifying the fault location. We require the $3V0_S$ measurement to identify any ground faults on the GSU LV winding or on the bus. The $3V0_S$ measurement can also help in identifying single-pole stuck conditions of a GSU LV-side breaker, as shown in Fig. 19.

For the second scenario, when a ground fault is detected, a staggered tripping of the CBs is also required to determine the location of the fault based on the number of generators connected to the GSU on the LV side.

Fig. 20 shows the scheme for two generators connected to the LV side of the GSU. The scheme uses a longer time delay (typically 0.25 to 1 second) when both the generator breakers are closed; otherwise, the scheme can be accelerated to trip in 5 cycles. This 5-cycle delay is to coordinate with the loss of the potential function. If the relay is set to respond for system-side ground faults, increase the accelerated trip delay from 5 cycles to 10 cycles or greater, or alternatively, block the logic by using torque control.

The logic shown in Fig. 20 must use $3V0_S$ and not V_N.

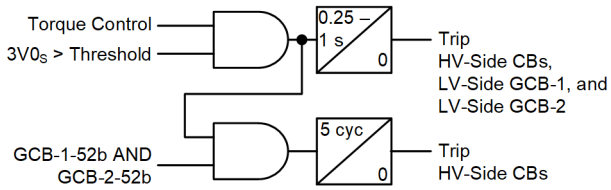

Fig. 20. Single-pole stuck isolation logic for generators sharing a common GSU

V. Conclusion

The existing 50BF-based methods are not capable of detecting a GCB failure under some abnormal generator conditions. Protection schemes that rely only on the 50BF have a greater risk associated with the stability of the power system and safety of equipment and people. Some faults inside the generator, GSU, or UAT may not jeopardize the stability of the power system, but they can result in serious equipment damage if the generator breaker fails to open.

This paper presents three generator BF schemes for the added dependability during low-current conditions, which can be designed in a generator protective relay to avoid security issues with the spurious BFI. The CB status logic can deal with issues related to the failure of the CB dc trip circuits. However, if the CB has any mechanical-related failures, these schemes fail to operate.

The voltage-based method checks the synchronism and provides better dependability for most of the cases. However, this scheme may be slow for some of the cases and might not work for single-pole stuck conditions. This scheme requires a synchronism-check function and PTs on both sides of the GCB.

The paper presents a new power-based scheme that uses the active and reactive power measured at the generator terminals. The scheme is secured by using the dc component and negative-sequence currents to avoid operation during faults for which the 50BF-based scheme can operate.

Only the voltage- and power-based schemes fail to identify single-pole stuck conditions of a GSU LV-side breaker. This paper also presents the effects of single-pole stuck conditions. Based on the analysis, we conclude that the zero-sequence voltage measured at the bus identifies this condition and trips all corresponding breakers.

VI. Appendix

Serial #	Protection Element	BF Initiation	50BF
1	Differential protection of generator, GSU, and UAT*	Y	Y
2	Overload protection of generator, GSU, and UAT*	Y	Y
3	Backup protection of generator, GSU, and UAT*	Y	Y
4	Loss-of-field protection of generator	Y	N
5	Negative-sequence overload protection of generator	Y	Y
6	Reverse power protection	Y	N
7	Backup protection for excitation system	Y	N
8	Frequency protection	Y	N
9	Accidental energization	Y	N
10	Out-of-step protection	Y	N
11	Stator earth-fault protection	Y	N
12	Inter-turn protection for generator, UAT*, and GSU	Y	N
13	Overexcitation protection of generator, GSU, and UAT*	Y	N
14	Sequence tripping reverse power	Y	N
15	Rotor earth fault	Y	N
16	Overvoltage of generator, GSU, and UAT*	Y	N
17	Excitation overheating	Y	N
18	Mechanical faults on GSU, UAT*, excitation transformer, and turbine (e.g., Buchholz, sudden pressure relay, etc.)	Y	N
19	GSU cooling control loss of power	Y	N
20	Stator-cooling water loss	Y	N
21	Excitation transformer overtemperature	Y	N
22	Emergency shutdown	Y	N

* Indicates if available

VII. Acknowledgment

The authors would like to acknowledge the valuable inputs of Michael Thompson and Dale Finney.

VIII. References

[1] IEEE Standard C37.119, IEEE Guide for Breaker Failure Protection of Power Circuit Breakers.

[2] NERC System Protection and Control Subcommittee, "Use of Circuit Breaker Position Indication in Breaker Failure Protection," December 2011. Available: https://www.nerc.com.

[3] C. Dall and D. Tierney, "Generator Breaker Failure Applications," proceedings of the 41st Annual Western Protective Relay Conference, Spokane, WA, October 2014.

[4] A. Guzmán, C. Labuschagne, and B. Qin, "Reliable Busbar and Breaker Failure Protection With Advanced Zone Selection," proceedings of the 31st Annual Western Protective Relay Conference, Spokane, WA, October 2004.

[5] C. Howard, B. Andrews, D. Taylor, N. Fischer, D. Finney, and M. Alla, "Lessons Learned From Generator Destructive Testing," proceedings of the 46th Annual Western Protective Relay Conference, Spokane, WA, October 2019.

[6] P. Wu, T. Wang, W. Han, and C. Chen, "Analysis on the False Action and Operation Criteria for the Generator Circuit Breaker Failure Protection," proceedings of the 2011 International Conference on Advanced Power System Automation and Protection, Beijing, China, October 2011.

[7] IEEE Standard C37.102, IEEE Guide for AC Generator Protection.

[8] N. Fischer, G. Benmouyal, and S. Samineni, "Tutorial on the Impact of the Synchronous Generator Model on Protection Studies," proceedings of the 35th Annual Western Protective Relay Conference, Spokane, WA, October 2008.

[9] IEEE 421.6-2017, IEEE Recommended Practice for the Specification and Design of Field Discharge Equipment for Synchronous Machines, June 2017.

[10] M. Alla, A. Guzmán, D. Finney, and N. Fischer, "Capability Curve-Based Generator Protection Minimizes Generator Stress and Maintains Power System Stability," proceedings of the 45th Annual Western Protective Relay Conference, Spokane, WA, October 2018.

[11] G. Hataway, J. Ellison, and M. Thompson, "Improving Breaker Failure Protection for Generator Applications," proceedings of the 38th Annual Western Protective Relay Conference, Spokane, WA, October 2011.

[12] M. Thompson and D. Finney, "Antimotoring Protection With Dependability-Biased Characteristic," proceedings of the 13th International Conference on Developments in Power System Protection, Edinburgh, United Kingdom, March 2016.

IX. Biographies

Matchyaraju Alla received his bachelor of engineering degree from Gitam University, India, in 2010 and his master of engineering degree from the University of Idaho, U.S.A., in 2017. He received his post-graduate diploma in thermal power plant engineering from National Power Training Institute, India, in 2012. He began his career with Vedanta Resources Plc, where he worked in generator protection and control and was in charge of testing and commissioning three 660 MW thermal power plants. Since 2016, Mr. Raju has been employed as a power engineer with Schweitzer Engineering Laboratories, Inc. His areas of interest include generator protection, transformer protection, and motor protection. He is a member of IEEE.

Sumit Sawai received a bachelor's degree in electrical engineering from the Sardar Patel College of Engineering in Mumbai, India, in 2011 and a master's degree in electrical engineering from Michigan Technological University in Houghton, MI, in 2015. He joined Schweitzer Engineering Laboratories, Inc. in 2015 and holds the position of power engineer in the research and development division. He was an intern at Siemens India Limited in 2014.

Normann Fischer received a Higher Diploma in Technology, with honors, from Technikon Witwatersrand, Johannesburg, South Africa, in 1988; a BSEE, with honors, from the University of Cape Town in 1993; an MSEE from the University of Idaho in 2005; and a PhD from the University of Idaho in 2014. He joined Eskom as a protection technician in 1984 and was a senior design engineer in the Eskom protection design department for three years. He then joined IST Energy as a senior design engineer in 1996. In 1999, Normann joined Schweitzer Engineering Laboratories, Inc., where he is currently a fellow engineer in the Research and Development division. He was a registered professional engineer in South Africa and a member of the South African Institute of Electrical Engineers. He is currently a senior member of IEEE and a member of the American Society for Engineering Education (ASEE). Normann has authored over 60 technical and 10 transaction papers and holds over 20 patents related to electrical engineering and power system protection.

20200717 • TP6945-01