Effective System Grounding. Analysis of the effect of High penetration of IBRs

Sebastien C. Billaut P.E., Senior *Member, IEEE*, Adam R. Miles E.I.T, *Member, IEEE,* Brittany N. Chapman E.I.T., *Member, IEEE*, Joseph C. Johnson E.I.T., *Member, IEEE,* Colleen T. Konsavage P.E., *Member, IEEE,* and Praveen K. Kumar P.E., *Member, IEEE*

***Abstract*—The transmission system has been grounded since its interconnection began in the 1900s. For over a century, generation was overwhelmingly provided by rotating machinery, and industry standards were implemented to keep the grounding effective. With the growing interconnection of large quantities of electronic power sources (inverter-based resources, for example) on the transmission system, some underlying assumptions related to the sources being rotating machinery are no longer valid. Consequently, traditional system grounding practices must be reexamined to ensure proper grounding as the transmission system evolves. This paper reviews why transmission systems are designed to be grounded, then discusses ways to keep the system grounded when most of its generation sources are inverters.**

***Index Terms*- Transmission grounding, grounding, inverter-based resources (IBRs), ungrounded**

I. WHAT IS THE DIFFERENCE BETWEEN A GROUNDED AND UNGROUNDED SYSTEM?

The system is solidly or effectively grounded if X0/X1≤ 3 and R0/X1≤ 1, where X0 and R0 are the zero-sequence reactance and resistance X1 the positive sequence reactance of the system. In effect, this means zero-sequence currents are produced when ground faults occur. These currents benefit the system by limiting the voltage rise on the un-faulted phases, impacting voltage insulation coordination. The over-voltages can be challenging as fault clearing durations are two orders magnitude greater than typical transient overvoltage not caused by faults. Application of surge arresters for ground-neutral service requires the system to be effectively grounded [8]

Traditionally, every part of the grid connects to a zero-sequence path to ground in the zero-sequence network. We achieve this connectivity by:

- connecting a generator neutral to the ground on rotating machinery,
- connecting the neutral on the Y configured side a Y-Δ transformer
- connecting both neutrals on a Y-Y transformer to the ground,
- placing grounding transformers on parts of the system that are otherwise isolated from the zero-sequence current.

A system is ungrounded, conversely, if zero-sequence currents do not develop for ground faults. In ungrounded systems, a two-line-to-ground fault's characteristics are identical to a line-to-line fault. A single line to ground fault does not produce fault current.

This paper proposes that effectively grounded systems must retain multiple negative-sequence paths to neutral and a zero-sequence path to ground in the system.

II. WHAT IS THE PURPOSE OF DESIGNING GROUNDED SYSTEMS?

For system protection, the primary motivation in designing grounded systems is to detect ground faults. There are other reasons for implementing grounding in electrical systems, but they are not the focus of this paper and are not discussed.

Single line-to-ground faults in grounded systems produce zero-sequence current in each phase whose magnitude is equal to a third of the fault current on the faulted phase. Protective relays can be programmed to detect and trip for this current, limiting the amount of damage to the system's equipment. Because the grid should typically experience low ground current levels in un-faulted conditions, this protection can also provide high sensitivity.

In an ungrounded or ineffectively grounded system, when a line-to-ground fault occurs, the system does not experience significant fault current magnitudes. The faulted phase holds at or close to ground voltage while the neutral and other phases maintain their rated voltage differences to the faulted phase. As such, the line to ground voltage magnitudes on the non-faulted phases rises 173%. This increase in line to ground voltage stresses insulators and arrestors. Failure to specify adequate withstand capability is a cause for equipment failure.

Manuscript received March 17th, 2021; revised Month dd, yyyy; accepted Month dd, yyyy. Support was provided by Commonwealth Associates, Inc.

All other authors are with Commonwealth Associates Inc., Lake Mary, FL 32746 USA, and Kennesaw, GA 30114, USA, (email: Sebastien.Billaut@cai-engr.com, Joseph.Johnson@cai-engr.com, praveen.kumar@cai-engr.com, Adam.Miles@cai-engr.com, Brittany.chapman@cai-engr.com, and colleen.konsavage@cai-engr.com).

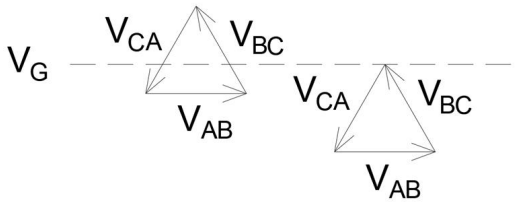

Figure 2.1 Ungrounded system during a line-to-ground fault.

III. Sequence Networks

The following section provides a brief review of sequence networks. It is not intended to be comprehensive but rather highlights how ineffective grounding can have negative impacts.

We use sequence networks as a tool to analyze unbalanced systems. Any set of phasors in a three-phase power system, balanced or not, can be decomposed into three sets of balanced phasors known as positive, negative, and zero sequence phasors.

120 degrees separates positive sequence phasors. The phasors have a rotation sequence consistent with the expected power delivery phasors (for example, A-B-C); for an ideally balanced non-faulted system, this would be the only set of phasors with non-zero magnitude.

120 degrees also separates the negative-sequence phasors, but the phasors have the opposite rotation sequence (i.e., in our example, A-C-B).

Lastly, zero sequence phasors have the same phase angle and have no rotation sequence instead of rotating together [2]. We show an example below.

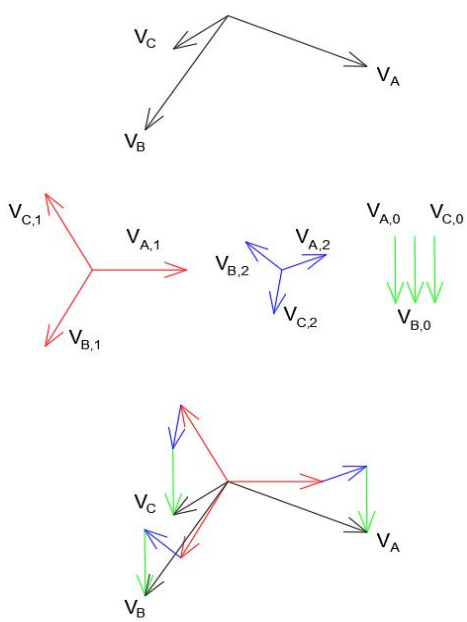

Figure 3.1 Example of sequence components.

Because these phasors are balanced, analysis can be done in sequence networks per phase. Once the sequence values are known, phase values can be calculated using the following equation. Voltage is specified, but phase current values could be calculated using the same equation with sequence currents.

$$\begin{bmatrix} V_{A,0} \\ V_{A,1} \\ V_{A,2} \end{bmatrix} = \frac{1}{3}\begin{bmatrix} 1 & 1 & 1 \\ 1 & \alpha & \alpha^2 \\ 1 & \alpha^2 & \alpha \end{bmatrix}\begin{bmatrix} V_A \\ V_B \\ V_C \end{bmatrix}, where\ \alpha = e^{j\frac{2\pi}{3}}$$

Equation 3.1. Sequence transform

$$\begin{bmatrix} V_A \\ V_B \\ V_C \end{bmatrix} = \begin{bmatrix} 1 & 1 & 1 \\ 1 & \alpha^2 & \alpha \\ 1 & \alpha & \alpha^2 \end{bmatrix}\begin{bmatrix} V_{A,0} \\ V_{A,1} \\ V_{A,2} \end{bmatrix}$$

Equation 3.2. Reverse sequence transform

Likewise, we decompose a system model into three balanced systems: the positive, negative, and zero sequence networks. These networks can be analyzed to determine the sequence phasors previously mentioned.

We model generators and motors, which we behave as generators during fault conditions. The generator positive sequence equivalent is a voltage source behind an impedance. The negative sequence equivalent is a short circuit behind an impedance, and the zero sequence equivalent is a neutral to ground impedance behind a generator impedance.

We model transmission lines as an impedance between terminals for positive, negative, and zero sequence networks.

Transformer models consist of an impedance between terminals in the positive and negative sequences. We determine the zero-sequence network based on the winding connections; this is discussed further in section IV. It is important to note that a phase shift occurs in some transformers; ignoring this does not yield correct phase values. We ignore load in classical fault analysis [6]. An example system is shown below in its sequence equivalents.

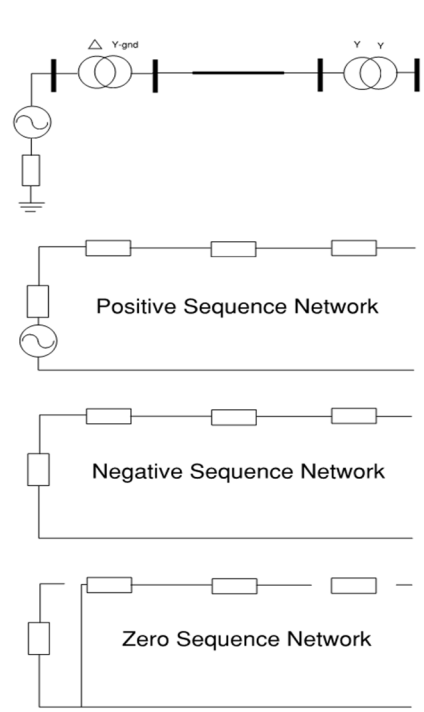

Figure 3.2 Sample sequence networks.

One can connect sequence networks to determine sequence phasors during fault conditions. Substituting in equation 3.1, sequence currents are equal in magnitude and phase during a single line to ground fault.

$$\begin{bmatrix} I_{Af,0} \\ I_{Af,1} \\ I_{Af,2} \end{bmatrix} = \frac{1}{3}\begin{bmatrix} 1 & 1 & 1 \\ 1 & \alpha & \alpha^2 \\ 1 & \alpha^2 & \alpha \end{bmatrix}\begin{bmatrix} I_f \\ 0 \\ 0 \end{bmatrix}$$

Using equation (3.2), we know that sequence voltages must sum to $I_f Z_f$ in the A-phase and some non-zero value in the B & C phases.

$$\begin{bmatrix} I_f Z_f \\ V_{B,f} \\ V_{C,f} \end{bmatrix} = \begin{bmatrix} 1 & 1 & 1 \\ 1 & \alpha^2 & \alpha \\ 1 & \alpha & \alpha^2 \end{bmatrix}\begin{bmatrix} V_{A,0} \\ V_{A,1} \\ V_{A,2} \end{bmatrix}$$

Thus, the connection of the sequence networks for a single line to ground fault is a series connection, shown below. [6]

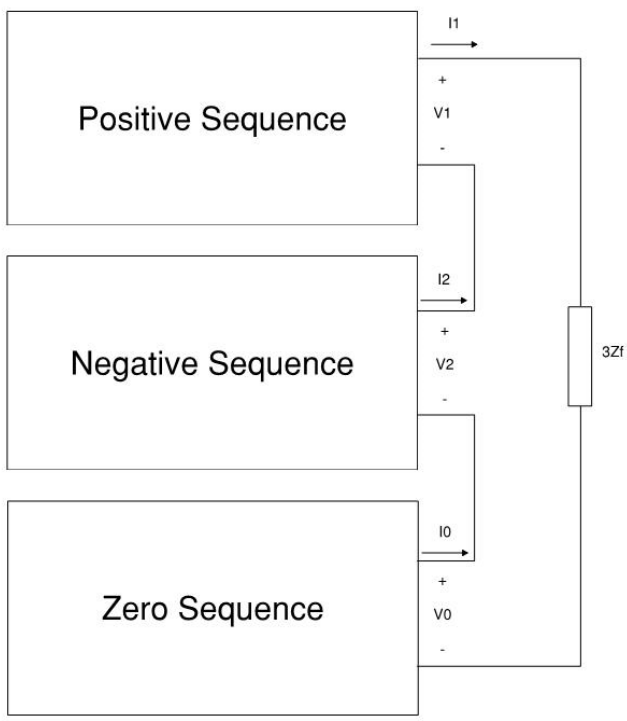

Figure 3.3 L-g sequence network arrangement.

Note that for a non-zero fault current to develop, a network must have an unbroken path in all three networks. The voltage on the un-faulted phases is also of interest. In a system with low penetration of IBRs (one where positive sequence impedance is approximately equal to that of negative sequence), fault voltage depends on zero-sequence impedance to the positive-sequence impedance ratio. A ratio of 0 results in un-faulted phase voltages of 0.866 p.u., while a ratio of ∞ results in voltages of 1.732 p.u. [3]

A similar analysis yields the appropriate combination of sequence networks for other faults. Below we show the connections for a line-to-line fault and a double line to ground fault.

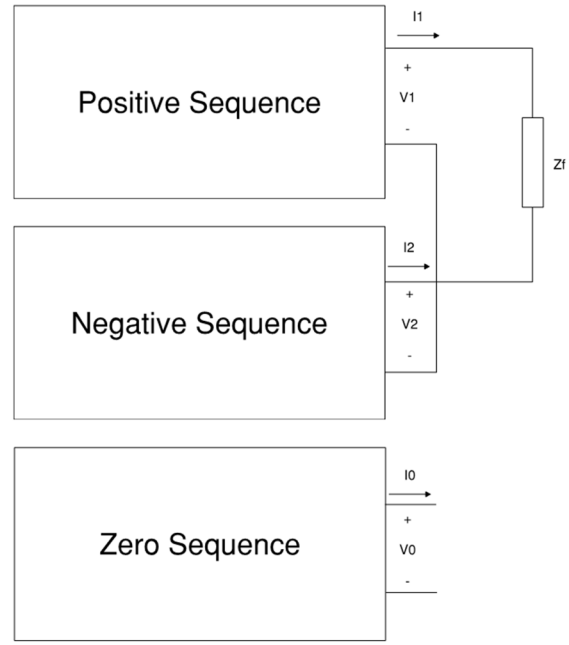

Figure 3.4 L-L sequence network arrangement.

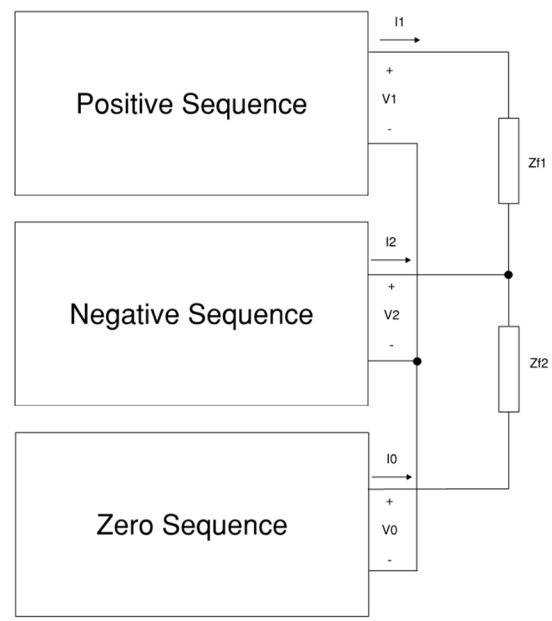

Figure 3.5 2L-G sequence network arrangement.

For a line-to-line fault, unbroken paths must exist in both the positive and negative sequence networks; this requires no zero-sequence path. There must be an unbroken path in the positive sequence and either the negative sequence network or the zero-sequence network for a double line to ground fault.

IV. Sources of Zero-Sequence Current

Determining the appropriate zero-sequence network is critical to analyzing unbalanced faults involving the ground. Components in a power system may either pass, block, or provide a path to ground for zero-sequence currents. [1]

As seen earlier, a generator's neutral point connection to the ground creates a ground path. The generator impedance is the sum of three times the neutral to ground impedance added to the generator zero-sequence impedance. [6]

Transmission lines pass zero-sequence current in the zero-sequence network. We typically can ignore the line shunt capacitances.

Transformers may either pass, block, or provide a path to the ground depending on the transformer's configuration. Below, we show an example of each type of connection. [1]

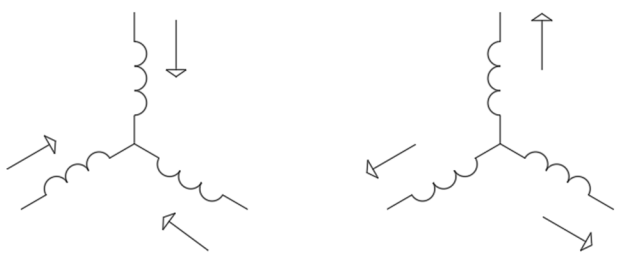

Figure 4.1. Zero-sequence no-pass, no-source transformer example.

In Figure 4.1, if the three currents flowing into the transformer are equal in magnitude and phase, the only solution that obeys Kirchhoff's laws is the zero-sequence current, $I_0 = 0$.

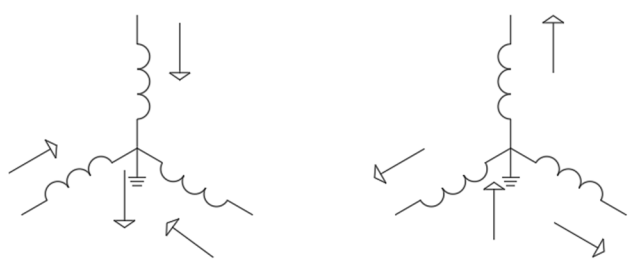

Figure 4.2. Zero-sequence passing transformer example.

In Figure 4.2, unlike in Figure 4.1, as the neutrals are grounded, there is a path for the zero-sequence current to enter or leave the transformer neutral, allowing the zero-sequence current I_0 to be any value allowed by the rest of the circuit. Note that any current that flows into the transformer primary must flow out of the transformer secondary; if this is not possible, I_0 must equal 0.

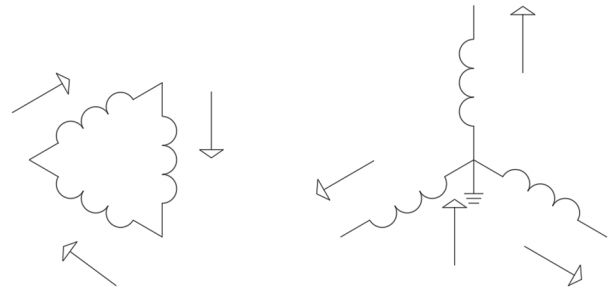

Figure 4.3. Zero-sequence "sourcing" transformer example.

In Figure 4.3, zero-sequence current cannot flow into the delta connected primary but can circulate within the windings. The Y-grounded connected secondary has a zero-sequence current that flows out of the transformer. This type of connection is said to "source" zero-sequence current. Note that "source" can be a misnomer, as it does not include a voltage or current source. When not connected to a network with generators, a transformer does not produce any zero-sequence current under balanced conditions, nor will it produce current during faulted conditions.

V. Example of a Grounded System

As stated in C37.102-2006, rotating generators are usually mechanically designed based on 3 phase fault conditions. However, phase-to-ground faults tend to produce significantly larger forces and stresses. It is cost-effective for manufacturers not to design the machine to sustain such forces. That is because high-impedance grounding of the generator neutral to limit the Line-to-Ground current magnitude is a cheaper alternative.

Three methods can increase the impedance:

- connect a neutral grounding transformer with a resistor connected to the secondary.
- Directly connect a resistor between the neutral and the ground.
- Directly connect a reactor between the neutral and the ground.

This addition makes generator zero sequence impedance practically infinite in most cases. A generator grounded in this way connected through a Ygnd-Ygnd transformer would not be a grounded source when connected to the transmission system. Figure 5.1 presents the sequence network of this interconnection in the presence of a phase to ground fault. The entire current to the fault is reduced to a small or null amplitude because the circuit is open at the generator zero sequence network. As explained in Chapter 1, this is not a desirable type of interconnection for the transmission system.

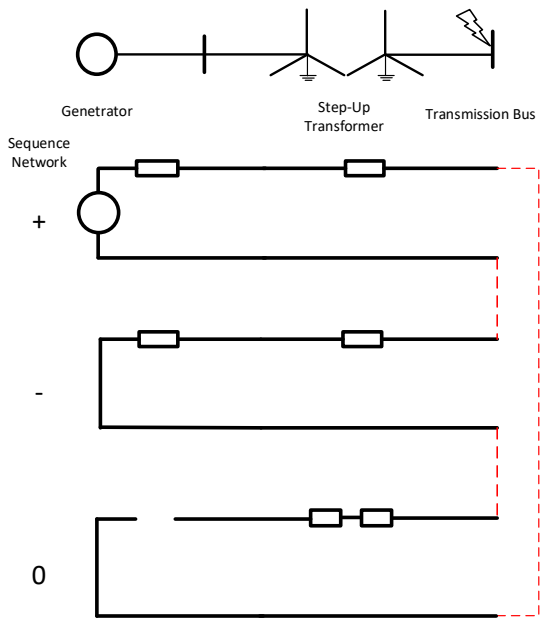

Figure 5.1. A line-to-ground fault with a Ygnd-Ygnd transformer.

Choosing an interconnection transformer that includes a path for zero-sequence current is critical. Changing the transformer with a "ground source" transformer closes the path. Figure 5.2 shows how adding a ground connection to the neutrals of the Y windings of the transformers and a tertiary Delta winding closes the circuit. This change allows for the significant zero-sequence, negative-sequence, and positive sequence currents to circulate. However, the **only source is still only located on the positive sequence network.** No source is on the zero-sequence network. This fact makes the nomenclature "ground-source" misleading, even though it is a commonly used terminology.

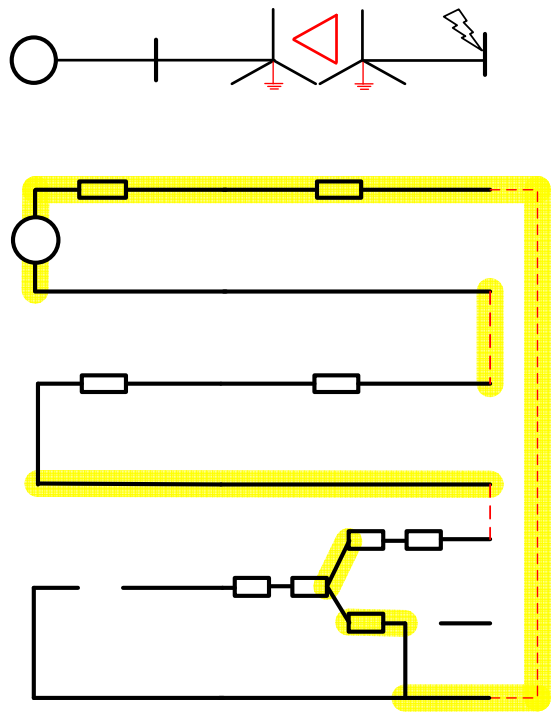

Fig. 5.2. A line-to-ground fault with delta tertiary.

Several transformers can be applied to close the path on the zero-sequence network. For example, a D-Y transformer neutrally grounded on the transmission system side provides a zero-sequence connection; this transformer type is the most common type generator step-up transformer or GSU. The addition of a grounding transformer is a solution to address existing conditions where the zero-sequence path is missing. A Zig Zag grounding transformer is an example of a type of grounding transformer.

Because grounding transformers only carry current proportional to the negative sequence voltage present at their terminal, their continuous current rating is low. This rating can be determined using a transmission line transposing practice to decrease phase voltage imbalance on the transmission system. Taking phase-to-ground voltage readings during high load conditions can be used to determine the appropriate continuous rating. To determine the short time rating and impedance, the protection system engineer should vary the impedance until the un-faulted phase reaches voltages below 130% of the nominal line to ground voltage. Such current would need to be carried for several seconds, typically 10s. Because the continuous current rating is low, a typical grounding transformer is a relatively low-cost transformer.

VI. Example of an IBR Connected to a Grounded System

There are four segments in a typical Inverter Based Resource (IBR):

1. The energy source or reserve (Battery, Solar Array Wind Turbine, …).
2. The DC bus.
3. The Inverter.
4. The AC Filter.

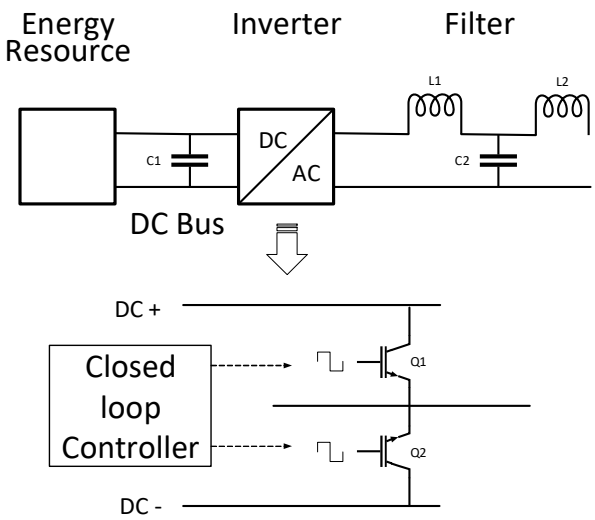

Figure 6.1. IBR resource components

The DC Bus has a connection to both the energy resource and the inverter. The DC bus usually includes large shunt capacitance to allow for bus voltage stability as the energy exchanges occur.

The inverter is composed of 2 sets of controllable electronic gates connected to the A.C. output. One set connects to the D.C. positive bus, and another set of controllable electronic gates connected to the D.C. negative bus. The DC bus charges or discharges through the gates.

The gate modulator varies the pulse frequency and length to match the current output target. A controller provides the target to the pulse modulator. An RLC filter tuned to the system frequency smoothes the output.

Unlike traditional rotating machinery, fault response in an IBR is programmable. This capability allows the possibility of adjusting the controller to introduce other current-based output profiles consistent with traditional non-IBR generators. The IBR can controller controls the modulator to produce sequence currents with the same angular relationship as a rotating machine to achieve this. This choice changes the problem into an output control solution. [7]

Consider a system where we connect loads to an IBR source through a single transmission line (Figure 6.1). This system is the simplified model for a microgrid operating in island mode. While this model is elementary, the principles scale to larger models with high penetration of IBRs.

Suppose a fault occurs at m% of the transmission line. In that case, one can analyze the system using symmetrical components by arranging the sequence networks for the system according to Figure 6.1, where Zs =the impedance of the source, Zload = the impedance of the load, Zl = the impedance of the line, and m represents the distance to the fault. First, we assess the behavior of fault current, then the behavior of fault voltage.

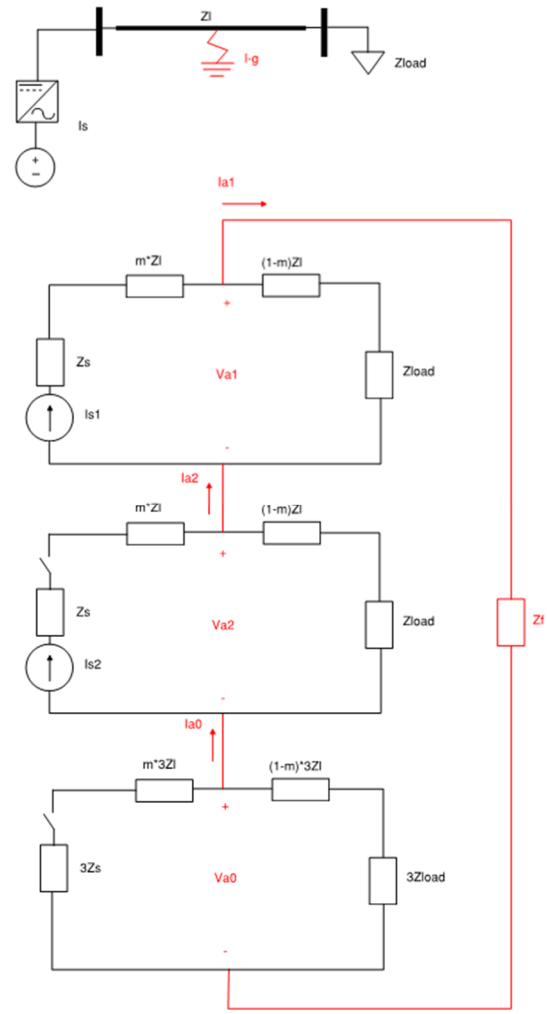

Figure 6.2. Line-to-ground fault at m% of the line

Consider a line-to-ground fault on phase A. Traditionally, in cases of a non-IBR generation source; load impedance would be ignored in the sequence models because it is assumed that $Z_{load} + (1-m)Z_l \ll Z_s + mZ_l$. Because these impedances are in parallel, the fault current flow through the load is negligible, so the equivalent impedance is approximately $Z_s + mZ_l$.

However, if an IBR does not produce a sequence current other than a positive sequence, this assumption may no longer be valid. In that case, the sequence path through the generation source has an infinite impedance, so sequence current can only flow through the load, not the source, and $Z_{load} + (1-m)Z_l \ll Z_i + mZ_l$. The fault current produced is as follows:

$$\frac{1}{3}I_{f,A} = \frac{Z_{load} + (1-m)Z_l}{5Z_{load} + 5(1-m)Z_l + Z_f} I_{s1}$$

Assuming that the fault produces a negligible magnitude fault impedance, the resulting fault current is 60% of the inverter output current. This value is specific to this particular network.

Next, let us evaluate the voltage behavior for the fault. During the fault on the faulted phase, the fault voltage should approach 0 V in reference to the ground with negligible fault impedance.

The voltage on the faulted phase at the inverter terminals is a simple function of current output and line impedance. For a fault on phase A:

$$V_A = mZ_l I_{s1}$$

As mZ_l is a small value; it is very likely the voltage at the inverter terminal experiences significant sag.

The fault voltage on the un-faulted phases can be determined using the reverse sequence transform. The un-faulted B-phase voltage is determined below. For readability, let $Z_{eq} = Z_{load} + (1-m)Z_l$.

$$V_{B,f} = \frac{1}{5} I_{s1}\left(-3Z_{eq} - \alpha^2 Z_{eq}\right) + \frac{4}{5} I_{s1}(\alpha Z_{eq})$$
$$V_{B,f} = \frac{1}{5} I_{s1} Z_{eq}(3\alpha - 3 - \alpha^2)$$

The magnitude of the un-faulted phases is then:

$$\left|V_{B,f}\right| = \left|V_{C,f}\right| = 1.058|I_{s1}|\left|Z_{eq}\right|$$

This voltage is dependent on the inverter output during fault conditions. If $I_{s1}$is assumed to be the same as steady-state output, then the term $|I_{s1}|\left|Z_{eq}\right|$, is approximately equal to nominal system voltage at the load, and the voltage on the un-faulted phases would experience virtually no voltage swell. Voltage swell only occurs if the IBR outputs higher currents during fault conditions.

VII. System Effects of IBRs

IBR fault current characteristic is manufacturer-specific. Consider an IBR with no closed negative sequence current path. In the worst-case scenario, the IBR continues to output a balanced three-phase current, and a fault goes undetected.

In a grid of solely IBR generation with no negative sequence output current during a fault, the fault current must flow in the ground loop between the point of the fault and the load neutral ground connection (considered solidly grounded in this analysis). We calculate the sequence current as follows:

$$I_{A,0} = I_{A,1} = I_{A,2} = \frac{1}{3} I_{A,f}$$
$$I_{A,f} = 3\frac{Z_{eq}}{2Z_{eq} + Z_0} I_{S1}$$

$Z_{eq}$is defined as the impedance between the point of the fault and load, roughly the load impedance itself; The term Z_0 is the zero-sequence network impedance. Z_{eq}should be approximately the same in the positive and negative sequence networks. If $a \cdot Z_{eq}$ is substituted for Z_0, the fault current equation becomes the following:

$$I_{A,f} = 3\frac{1}{2+a} I_S$$

If $Z_0 \ll Z_{eq}$, a approaches 0, and the fault current approaches 150% of the IBR fault current output. As the value of Z_0 increases, $I_{A,f}$ approaches a theoretical value of 0. This value equates to an ungrounded system, which we expected. However, zero is an unrealistic value as Z_0 will likely never exceed $3Z_{eq}$. A more realistic lower bound would be 60%.

A critical problem posed in this situation is that the phase current between the IBR generation and the fault point is a balanced three-phase current. If current alone is measured in this section of the grid, a relay would likely not be able to issue a trip signal.

Next, consider fault current in the case of the line-to-line fault in a grid of purely IBR generation with no negative sequence output:

$$\begin{bmatrix} I_{A,f} \\ I_{B,f} \\ I_{C,f} \end{bmatrix} = \begin{bmatrix} 1 & 1 & 1 \\ 1 & \alpha^2 & \alpha \\ 1 & \alpha & \alpha^2 \end{bmatrix} \begin{bmatrix} I_{A,0} \\ I_{A,1} \\ I_{A,2} \end{bmatrix}$$

In a network with no negative sequence path to neutral between the source and the point of the fault, the only path for negative sequence current to flow is between the point of the fault and load. The impedance of this section of the positive-sequence network and the negative-sequence network should be the same. Thus, the equation can be re-written as follows.

$$\begin{bmatrix} I_{A,f} \\ I_{B,f} \\ I_{C,f} \end{bmatrix} = \begin{bmatrix} 1 & 1 & 1 \\ 1 & \alpha^2 & \alpha \\ 1 & \alpha & \alpha^2 \end{bmatrix} \begin{bmatrix} 0 \\ \frac{1}{2} I_{S1} \\ -\frac{1}{2} I_{S1} \end{bmatrix}$$

We can calculate that the magnitude of the fault current between phases is $\sqrt{3}/2$ (or ~0.866) times the source current during a fault. However, the source current continues outputting a balanced three-phase positive sequence current. This situation could pose a problem for protection relays that rely upon unbalance currents; to the relays in this portion of the grid, the grid appears un-faulted.

Next, consider the load current under these same fault conditions. The positive sequence load current is equal to the positive sequence fault current, but the negative sequence load current is the negative of the negative sequence fault current. Evaluating the phase current yields:

$$\begin{bmatrix} I_{Load,A} \\ I_{Load,B} \\ I_{Load,C} \end{bmatrix} = \begin{bmatrix} 1 & 1 & 1 \\ 1 & \alpha^2 & \alpha \\ 1 & \alpha & \alpha^2 \end{bmatrix} \begin{bmatrix} 0 \\ \frac{1}{2} I_{S1} \\ \frac{1}{2} I_{S1} \end{bmatrix}$$

This fault does not affect the A phase load current, but B and C phase currents are reduced to 50% of the fault current output of the IBR at an angle of 180ºin reference to V_a. This solution is intuitive: the B and C phases' load impedances behave as equal parallel impedances connected to a bus. This equivalency is as if the bus was located at the point of the fault. Any phase-

shifting transformer alters this result, but the load current is nonetheless unbalanced.

Another effect is that any relays in the grid that rely on negative-sequence or zero-sequence directional elements could be defeated. As shown in section VI, these currents may no longer flow from the grid's generation side towards the fault but rather from load to fault. Any sequence fault current that flows through the relay may not be large enough in magnitude to exceed the minimum requirements of the element. Furthermore, even if the magnitude of sequence current were large enough to enable a directional element, the element might not declare a fault in the correct direction because IBRs may output current during a fault that does not lag the voltage by 90 degrees.

VIII. Model Simulations

The widely studied IEEE 9 Bus system (revision 1) PSCAD model was modified to replace one of the generators with an inverter model to simulate invertor response to faults. The inverter model used is the latest "black-box" actual code from a prominent manufacturer. Previous studies on past inverter's controls had shown instability in the negative sequence current to negative sequence voltage angle. We verify whether a new version of the control performs better when compared to rotating machinery.[9]

We show the system below.

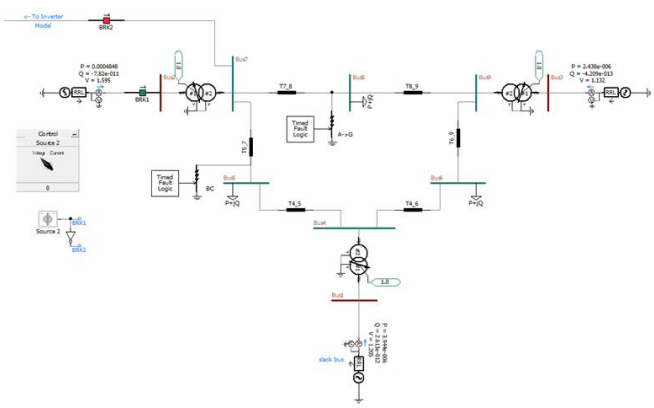

Figure 8.1 PSCAD model

We chose the PSCAD software as inverter manufacturers can provide detailed specifications on their control systems that are not available in short circuit software.

The two faults of interest are line-to-line faults and line-to-ground faults. We place one of each on the system. We show the results below.

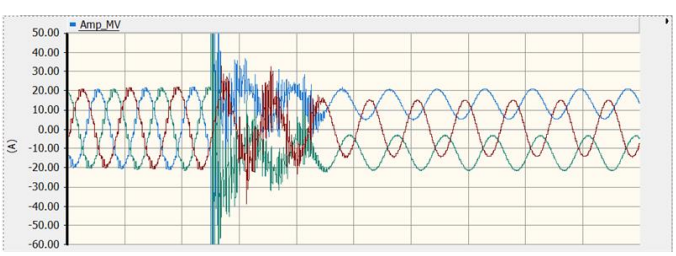

Figure 8.2 Fault current from IBR during l-g fault

For this particular invertor, fault current magnitude is not significantly higher than steady-state output. Further, the current phasing is still balanced.

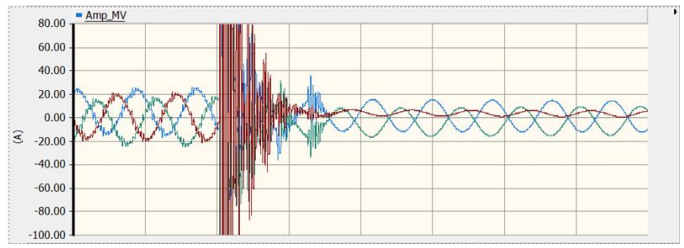

Figure 8.3. Fault current from IBR during a line-to-line fault.

In our simulation, the controller performance compared to rotating machinery was a better match for line-to-line fault than phase-to-ground faults. The fault current magnitude, however, is still not significantly higher than the steady-state current magnitude.

To analyze in more detail, we exported the signal in Comtrade format. We use a relay event analysis tool to zoom and graph sequence quantities and angle relationships. Figures 8.4, 8.5, and 8.6 show the output of this analysis. The top graph represents the phase currents; below are the phase voltages, followed by the negative sequence voltage to negative sequence current angle.

Figure 8.4 presents the overview of the recording, including a line-to-line and a line-to-ground fault. Figure 8.5 shows the detail of the line-to-line fault output. Figure 8.6 shows the detail of the line-to-ground fault output.

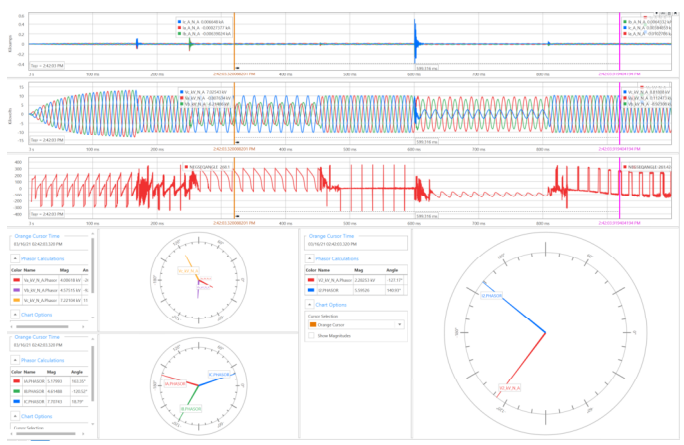

Figure 8.4. Event Analysis – I2/V2 Angle instability.

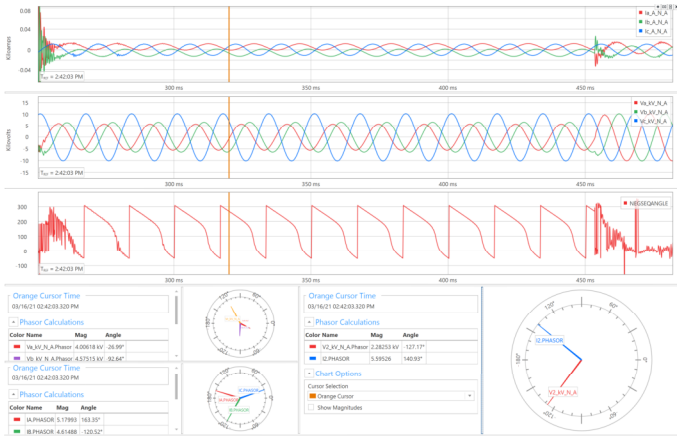

Figure 8.5. Line-to-ground Fault detail – I2/V2 Angle instability.

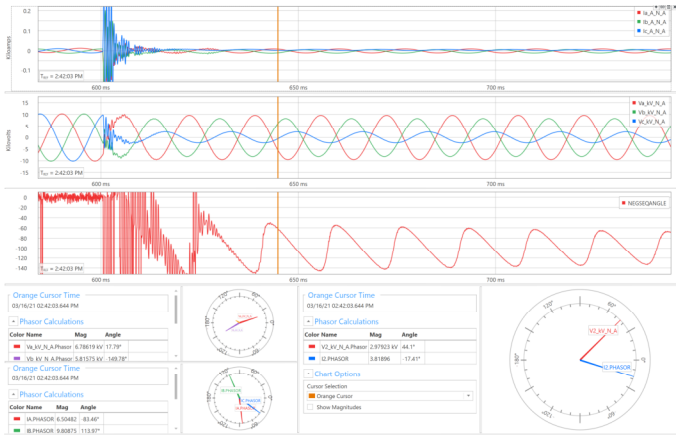

Figure 8.6. Line-to-line Fault detail – I2/V2 Angle instability.

A striking observation is an unstable angle relationship between the negative sequence voltage and the negative sequence current.

Another observation is that the first faulted cycle consists of a large current transient with frequencies ranging principally from 0 to 2000Hz, as shown in figure 8.7.

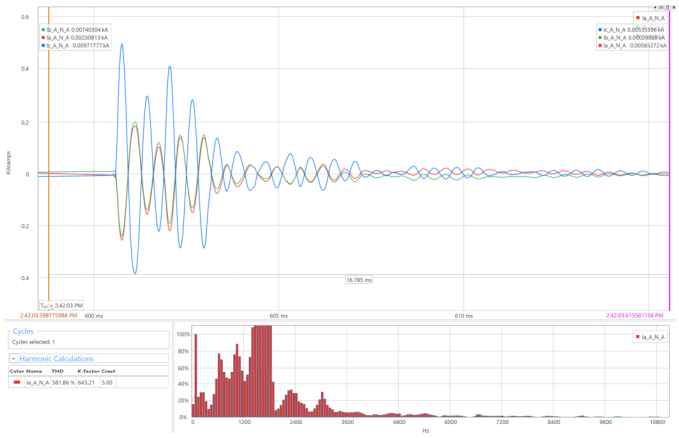

Figure 8.7. Line-to-ground Fault detail – first cycle detail

IX. Conclusion

System grounding is essential for protection engineers because it allows high magnitude fault currents to develop, causing protective relays to trip and fuses to blow. To analyze faulted systems, networks are broken down into their sequence components. In systems with traditional rotating machinery generation, there is always a path in the positive- and negative-sequences, so emphasis is placed on ensuring there is a path in the zero-sequence. With the introduction of IBRs into the grid, care must be taken to ensure that there is also a path in the negative sequence, as these sources may or may not have negative-sequence output. If there is no negative-sequence output, one can no longer neglect load impedance in fault analysis.

Under conditions without negative sequence output from inverters, the transmission network might not detect faults while load voltage and current will be distorted. Negative sequence values may not exhibit faulted conditions indicative of a forward fault, meaning directional elements that rely on sequence components may no longer be reliable for fault detection.

In this paper, we presented the idea that the behavior of IBR challenging the grounding of the system is also problematic for voltage insulation coordination. Thus, the industry must change the IBR's behavior to be similar to the rotating machinery's fault response. Since the Sandia Lab report [9], which detailed the response to the fault of 4 OEM's, in early 2020, we have taken a look at an updated controller to find that it still does not respond as rotating machinery.

References

[1] G. Johnson, M. Schroeder, and G. Dalke. Apr. 2008. A Review of System Grounding Methods and Zero Sequence Current Sources. Presented at 2008 61st Annual Conference for Protective Relay Engineers. [Online]. Available: https://ieeexplore.ieee.org/document/4515046

[2] E. O. Schweitzer, III, and S. E. Zocholl. Apr. 2004.Introduction to Symmetrical Components. Presented at the 58th Annual Georgia Tech Protective Relaying Conference. [Online]. Available: https://cdn.selinc.com/assets/Literature/Publications/Technical%20Papers/6066_IntroSymmetrical_SZ_20110510_Web.pdf?v=20151130-183025

[3] S. Santoso, "Voltage Sag Analysis," in Fundamentals of Electric Power Quality, Winter 2012 ed. Austin, TX, USA: Surya Santoso through CreateSpace, 2012, ch. 4, sec. 4-5, pp. 99-107

[4] "Impact of the Penetration of Inverter-Based Systems on Grid Protection" by Tuladhar, L. R., and K. Banerjee presented at CIGRE US National Committee, 2019 Grid of the Future Symposium (https://cigre-usnc.org/wp-content/uploads/2019/10/2D_3.pdf)

[5] IEEE Guide for A.C. Generator Protection, IEEE Standard C37.102, 2006

[6] A. Bergen, and V. Vittal "Unbalanced System Operation," in Power Systems Analysis, 2nd ed. Upper Saddle River, NJ, USA: Prentice-Hall, Inc., 2000, ch. 12, sec. 0-11, pp. 445-475

[7] IEEE PES Report "Impact of Inverter Based Generation on Bulk Power System Dynamics and Short-Circuit Performances", July 2018, Technical Report, PES-TR68.

[8] "IEEE Recommended Practice for Grounding of Industrial and Commercial Power Systems," in IEEE Std 142-2007 (Revision of IEEE Std 142-1991) , vol., no., pp.1-225, 30 Nov. 2007, doi: 10.1109/IEEESTD.2007.4396963.

[9] OSTI.GOV Technical Report: *Impact of Inverter Based Resource Negative Sequence Current Injection on Tran*smission System Protection, published on 01/01/202, OSTI Identifier:1595917*,report number:*SAND2020-0265683084

Sebastien C. Billaut, P.E., was born in Lille, France. Sebastien received his Diplôme d'Ingénieur in mechanical and electrical engineering from the École Spéciale des Travaux Publics in Paris, France in 1992 and became a member of IEEE in 2006.

He has over 28 years of utility-related engineering experience, including 20 years of setting protection relays and power system modeling. He is currently a manager of Protection and Controls at Commonwealth Associates Inc. Orlando, FL, USA. Previously, he was a professional Engineer at Duke Energy Florida. He held various technical leadership positions at Lakeland Electric, Norelec (EIFFAGE), and CEGELEC Alstom. In 2006, he presented "Calculating the maximum error rate of a saturated C.T. and using the results to prepare relay setting" at the 2016 Georgia Tech Relay conference. Mr. Billaut is an active contributor to IEEE PES PSRC, including developing the P2800 performance standard on the interconnection of inverter-based resources. With Commonwealth, he has applied for a U.S. Patent on a method and apparatus for locating faults in an islanded microgrid. He currently Chair IEEE PSRC Working group D44, which aims at revising the C37.114 Guide on fault location in A.C. Distribution and Transmission systems. He also Chairs the IEEE PSRC Working Group K29, which aims at revising the K3 report published in 2009 on reducing outage durations through improved protection and auto-restoration in distribution substations. He is a voting member of the IEEE PSRC Subcommittee D (Transmission Line Protection) and K (Substation Protection).

Praveen K. Kumar, P.E., earned his bachelor's degree in E.E. from R.V. College of Engineering in Bangalore, India, and a M.S. in Electrical Engineering – Power Systems from Michigan Technological University. He holds graduate diplomas in 'Astronomy and Astrophysics and in Hybrid Electric Vehicle Engineering. He has worked on hybrid automotive engineering projects with Volvo, General Motors, and the U.S. Department of Energy. In addition to being the office lead and Program Manager for Florida, in his role as a high voltage protection engineer with Commonwealth Associates, Inc., Praveen has worked extensively on system protection, with a special focus on transmission grid substation protection for major utilities. His interests include renewable energy interconnections, smart grid, economic analysis, and market research. He has been a student member and now an active member of IEEE for the past 12 years. Until January-2021, he served as the Chair for the IEEE- Young Professionals Affinity Group for Region 4 and has been in an IEEE leadership role since 2012. He is also a member of the Energy Policy Committee of IEEE-USA. This committee's efforts are directed towards energy-related activities of the legislative and executive branches at all levels of the U.S. government.

Colleen T. Konsavage, P.E. (M'13), received a B.S.E. degree in systems and control engineering from Case Western Reserve University in Cleveland, Ohio, the USA in 2012 and a M.S. degree in nuclear engineering from The University of Pittsburgh in Pittsburgh, Pennsylvania, USA in 2016. She is a licensed professional engineer in the state of Ohio, USA.

From 2012 to 2015, she worked as an Engineer in the nuclear industry with Westinghouse Electric Company and Babcock & Wilcox Conversion Services. From 2015-2019, she worked at American Electric Power as an Engineer in transmission station design, station protection, and smart grid technology. She now works as an Electrical Engineer for Commonwealth Associates, Inc in Columbus, OH, USA.

Ms. Konsavage is a trustee on the board of the National Society of Professional Engineers (NSPE)- Franklin County Chapter. She is also an executive officer of the Columbus Section of IEEE, and a member of the IEEE PES PSRC working group D43, focusing on the effect of distribution automation on protective relaying.

Adam R. Miles, E.I.T., was born in Atlanta, Georgia, the USA, in 1996. Adam received a B.S. degree in electrical engineering from The Georgia Institute of Technology in Atlanta, Georgia, the USA, in 2018. Adam has been a member of IEEE since 2018.

In 2017, he worked for Florida Power and Light in power distribution. Since 2018, he has been a Protection and Control Engineer with Commonwealth Associates, Inc., in Atlanta, GA, USA, specializing in relay settings for transmission substations.

Joseph C. Johnson, E.I.T., earned his B.S. in E.E. and Electric Power Engineering Certificate from Michigan Technological University in 2015. He has been working as a high voltage protection engineer with Commonwealth Associates, Inc. since late 2015. Joseph has worked primarily on transmission grid and substation protection for major utilities. He began working with renewable projects in mid-2020, modeling work and relay settings for wind farms and BESS installations.

Brittany N. Chapman, E.I.T, earned her Bachelor of Science degree in Electrical Engineering in 2013 from the University of Central Florida. From 2013 to 2016, she worked for prominent equipment manufacturers in the power industry, but discovered her true engineering passion in Protection and Control Design at the transmission level after a move to the consulting world. She has since been involved with multiple BESS projects and IEEE PSRC working groups.