TEXAS A&M RELAY CONFERENCE | MARCH 22 – 25, 2021

Centralized Protection & Control

Enhancing reliability, availability, flexibility & improving operation efficiency

Presenter: Joe Xavier, Global Product Manager ANSI, Digital Substation Products & Systems

Centralized Protection & Control for Distribution Substations

Content

- Introduction
- Traditional microprocessor relay architecture
- Centralized Protection & Control (CPC) architecture
- Comparison of CPC with traditional P&C approach
- Application examples
- Lessons learned from field installation
- Conclusion
- Questions & Responses

Centralized Protection & Control for Distribution Substations

Evolution of protective relay technology

The first relays began to appear in the early 1900s…… and have evolved to advanced IEDs of today

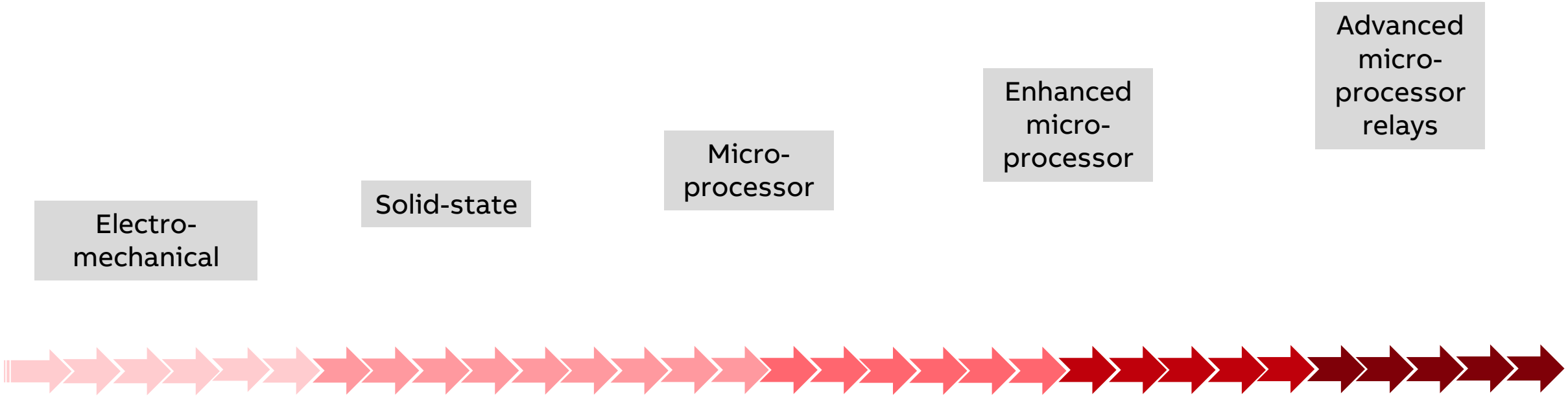

Centralized Protection & Control for Distribution Substations

Evolution of P&C communication architecture

Modbus / DNP architecture

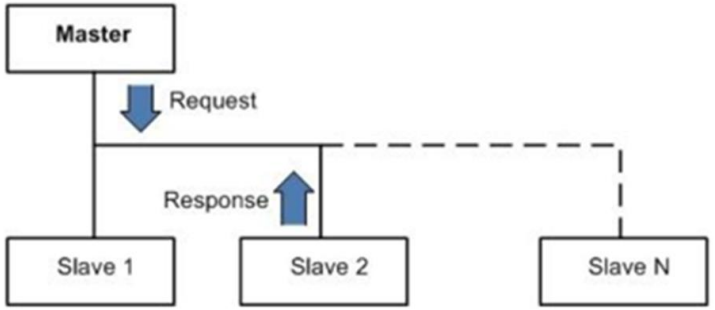

Proprietary architecture: peer-to-peer communication

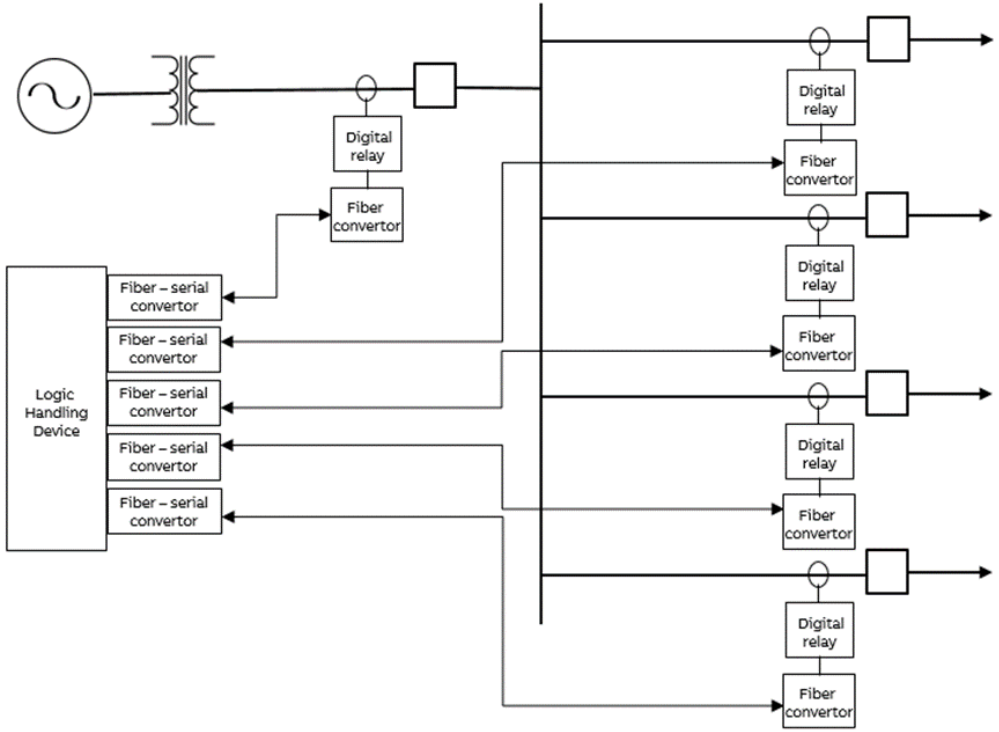

Centralized Protection & Control for Distribution Substations

P&C architecture using native IEC 61850 GOOSE communication

Fast bus protection scheme

Utilizes advanced intelligent microprocessor relays with native IEC 61850

GOOSE publishing and subscribing set up within the relays

P&C logics built with in the relay itself

Direct fiber port on the device

Relays networked using a managed Ethernet switch

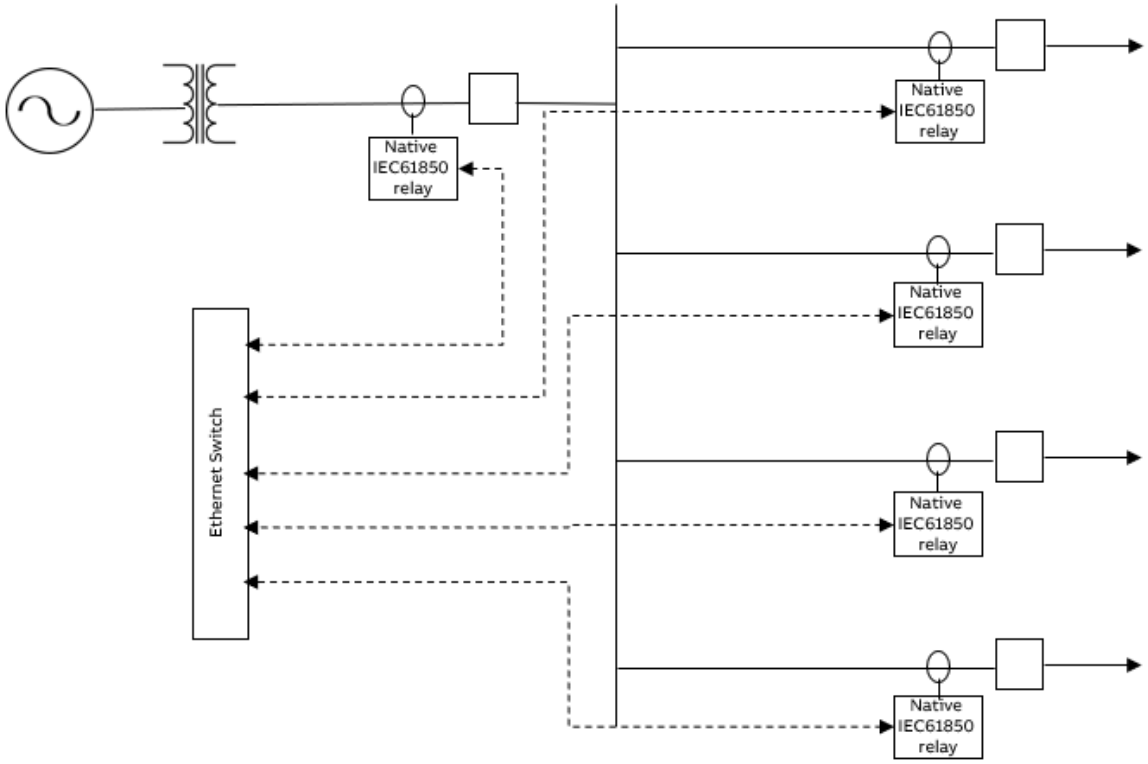

Centralized Protection & Control for Distribution Substations

IEC 61850 architecture – Station bus (8-1) and Process bus (9-2)

MMS, GOOSE & Sampled Values

MMS for vertical communication

GOOSE for horizontal (peer-to-peer) communication

Sampled Values (SV) for process bus communication

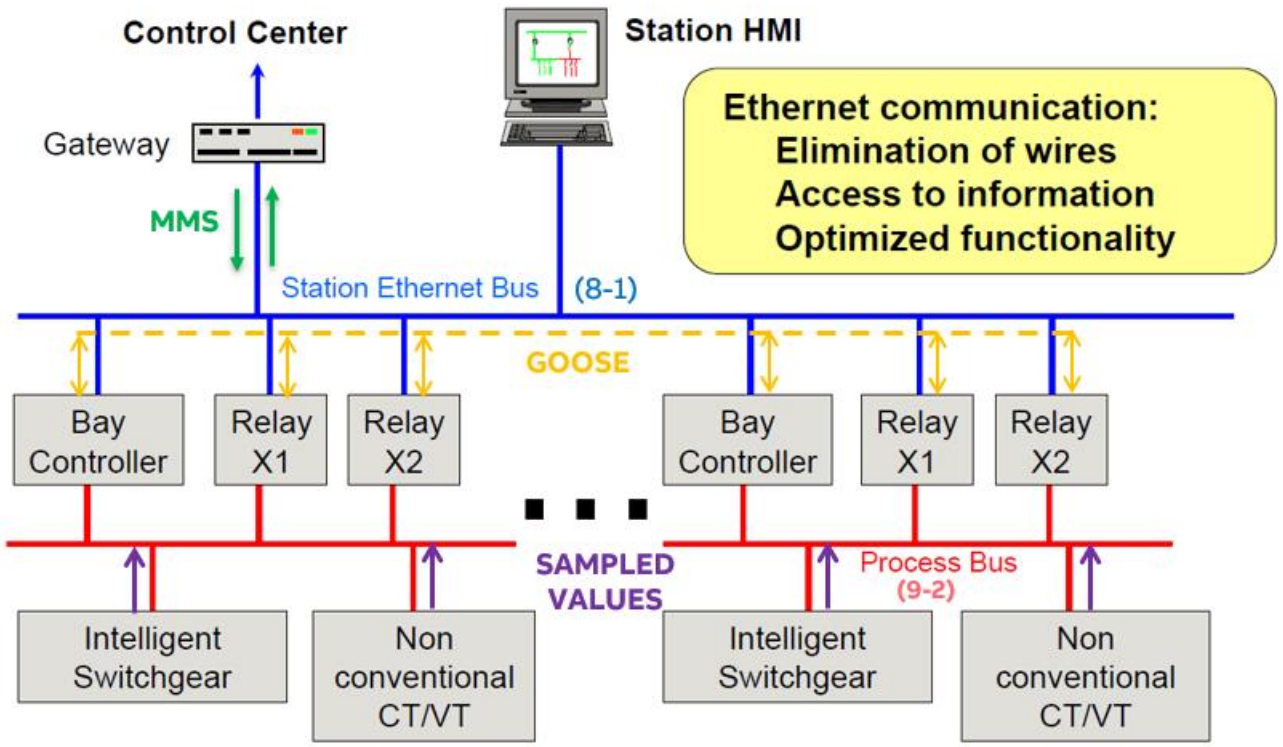

Centralized Protection & Control for Distribution Substations

CPC System components

System concept & components

Based on IEC 61850 global standard for power system applications

Move protection and control from multiple feeder level devices to **single central processing unit**

Merging units (MU) acts as interface between CT/VT and CPC device

Option of using **Intelligent merging unit (IMU)** – protective relay capable of performing MU functionality

Substation **time synchronization** according to IEEE 1588 PTP and IEC 61850-9-3 - 1 µs accuracy

Redundant communication as per IEC 62439-3

- PRP, HSR

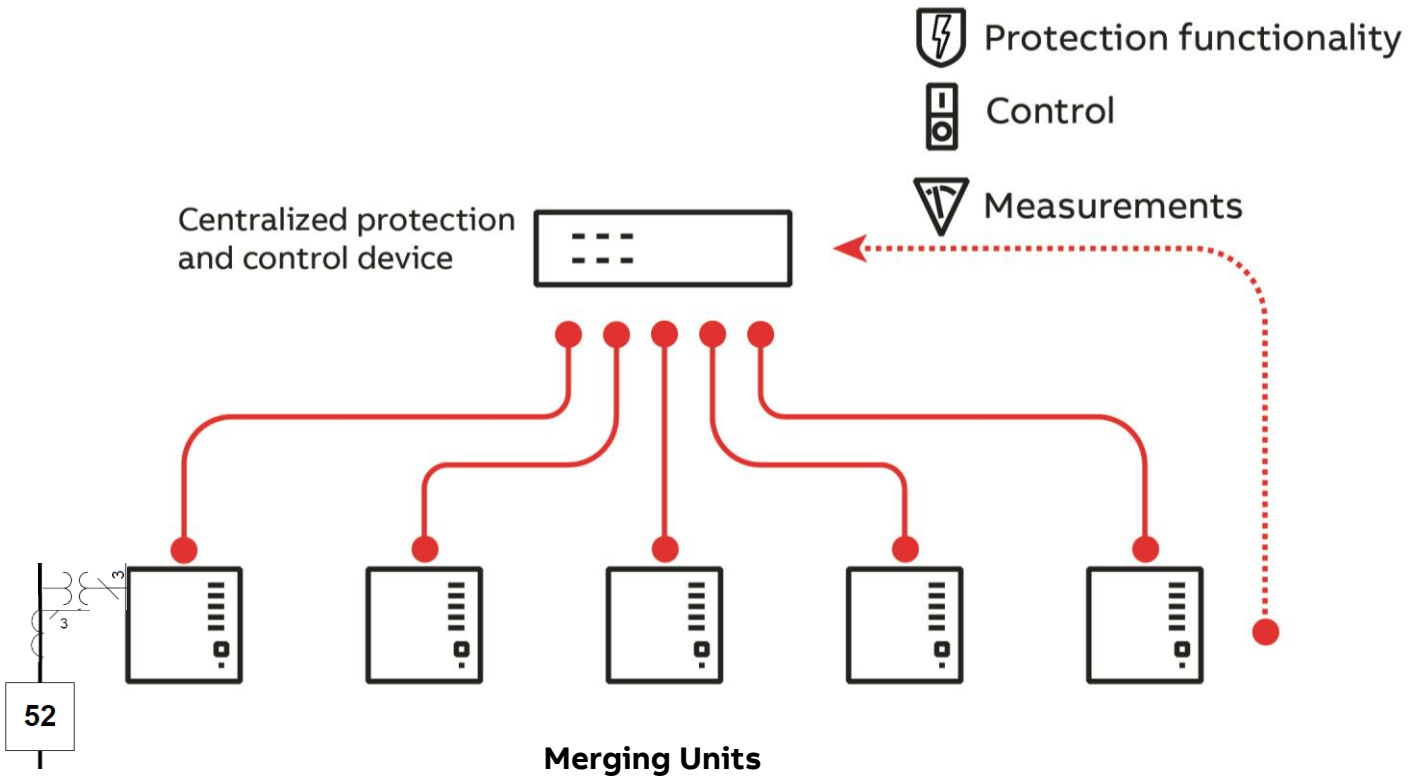

Centralized Protection & Control for Distribution Substations

System design considerations

Cybersecurity

Follow international standards and guidelines for cybersecurity

- IEEE 1686, IEC 62351, NERC-CIP
- Role based access control
- Secured communication protocols
- Audit trails
- Signed software packages
- Remote asset management capability

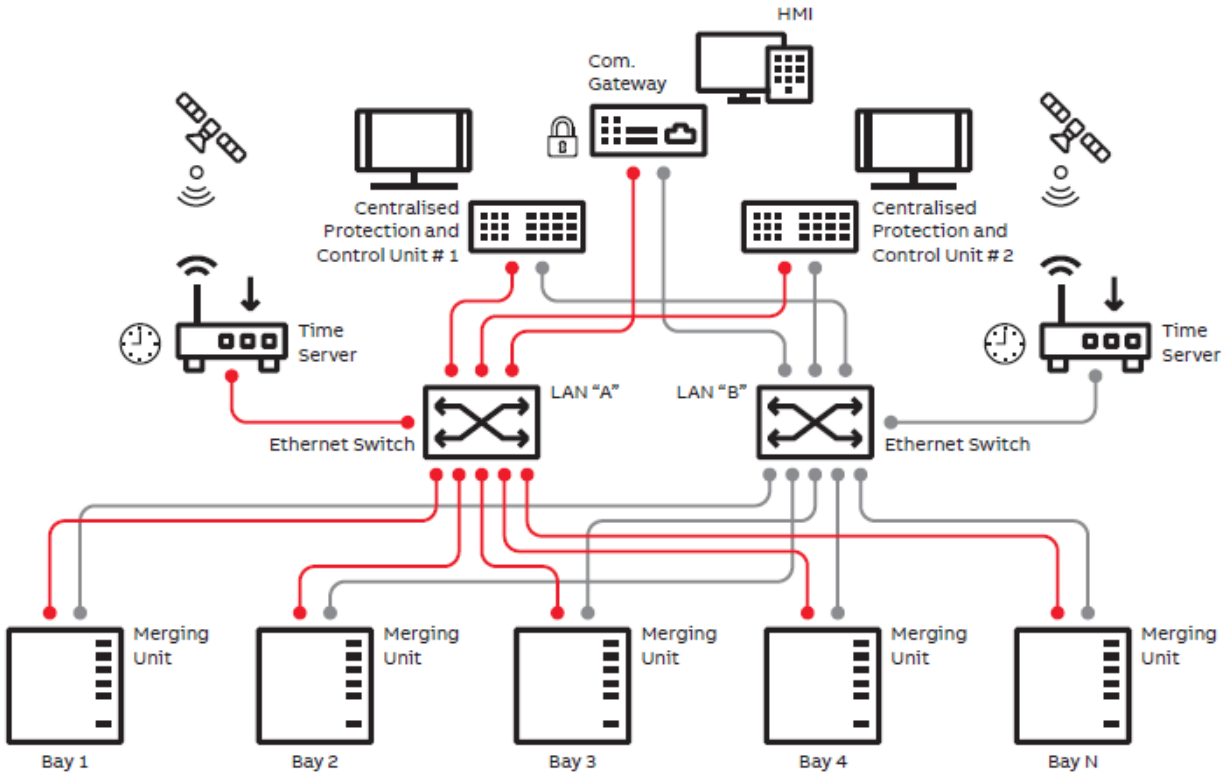

Centralized Protection & Control for Distribution Substations

How does it compare with traditional P&C system approach?

Traditional approach vs. CPC approach

Relay selection

System engineering

Redundancy & reliability

Testing

Operation

Maintenance

Safety

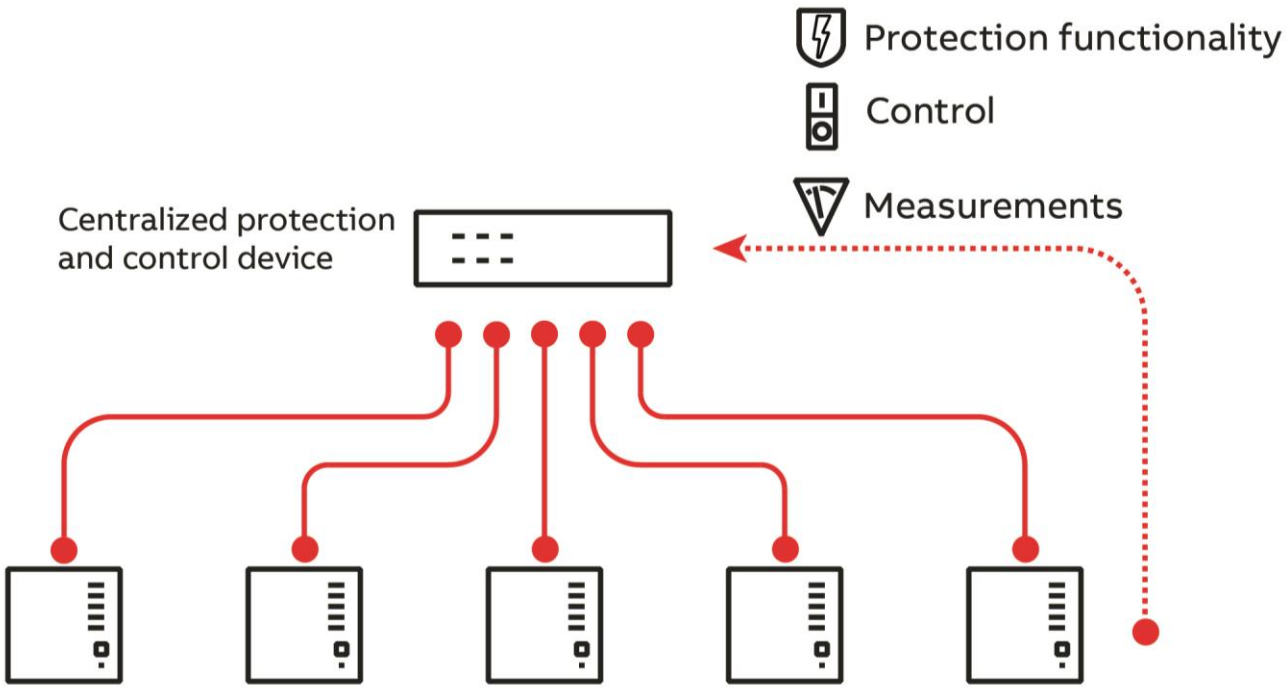

Centralized Protection & Control for Distribution Substations

How does it compare with traditional P&C system approach?

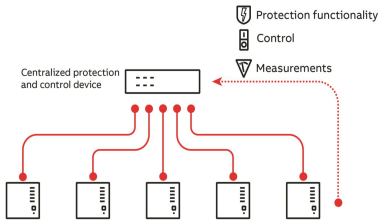

Traditional approach

Relay selection

- One or more relay per feeder based on application
- Example – Transformer, feeder, bus, etc.
- Wrong order code selection has significant cost and time impact on project cost and execution time
- Spares maintained for each relay type

System engineering

- Each protection relay is configured individually for protection elements, settings, GOOSE messaging and interlocking schemes
- Alarms, events and DRs are distributed
- Reconfiguration of protection and control requires extensive re-engineering effort

CPC approach

Relay selection

- Eliminates the need of one relay per feeder per application
- All feeders have same type of merging units
- Protection functions no longer dependent on the hardware
- Only two types of hardware for the entire substation – CPC unit & the MU

System engineering

- All protection elements, settings and control for the whole substation at a single point - about 30% reduction in engineering time
- Centralized alarms, events and disturbance recording facility
- Reconfiguration of protection and control easily performed to adapt to changing substation / grid requirements

Centralized Protection & Control for Distribution Substations

Redundancy and reliability

Redundant system #1

Redundant CPC units – eliminates loss of protection

One MU per feeder

Recommended for users with single multifunctional relay per feeder

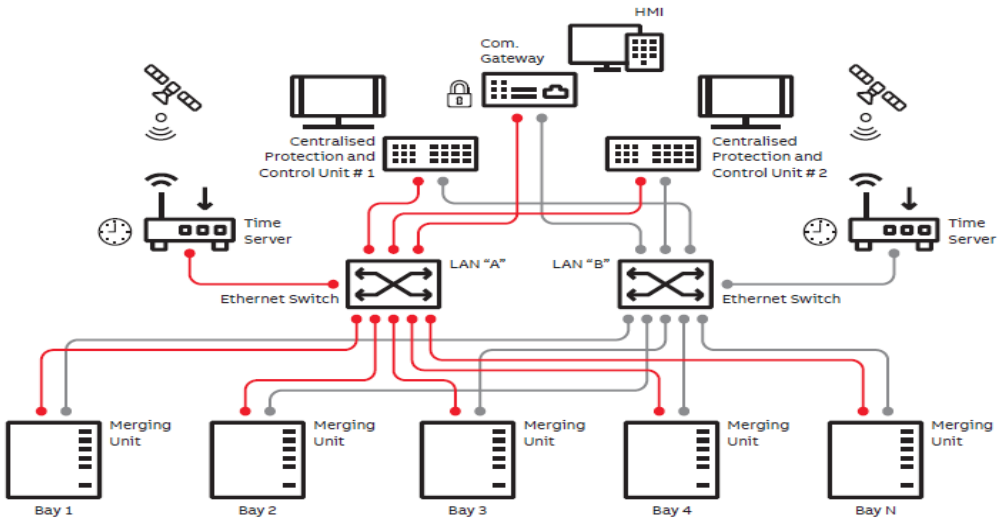

Redundant system #2

Single CPC unit, Single **Intelligent Merging Unit (IMU)** per feeder

IMU provides local protection in the event of communication downtime - Ideal solution where: protection redundancy is desired

Communication redundancy (not shown for simplicity's sake)

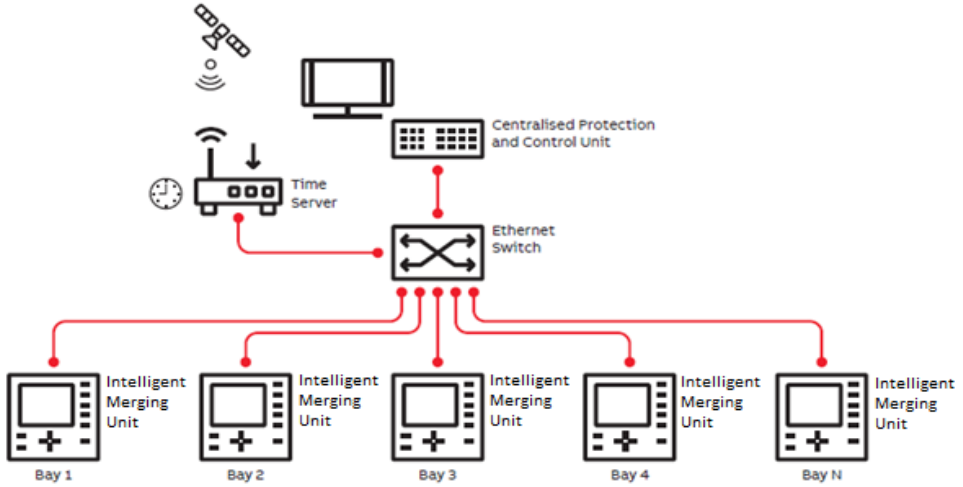

Centralized Protection & Control for Distribution Substations

Redundancy and reliability

Redundant system #3

Redundant CPC units, MU

Avoids single point of failure at CPC and MU levels

Doubling the MU reduces CPC protection capacity to half

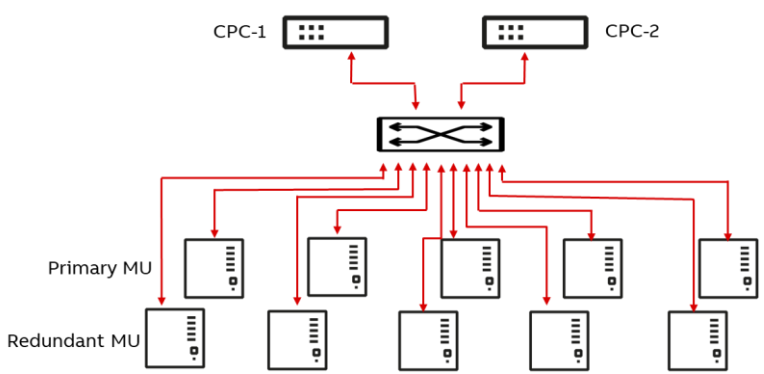

Redundant system #4

Redundant CPC units, MU, back-up IMU

No circuit will go unprotected

Highest level of reliability, highest cost

Doubling the MU reduces CPC protection capacity to half

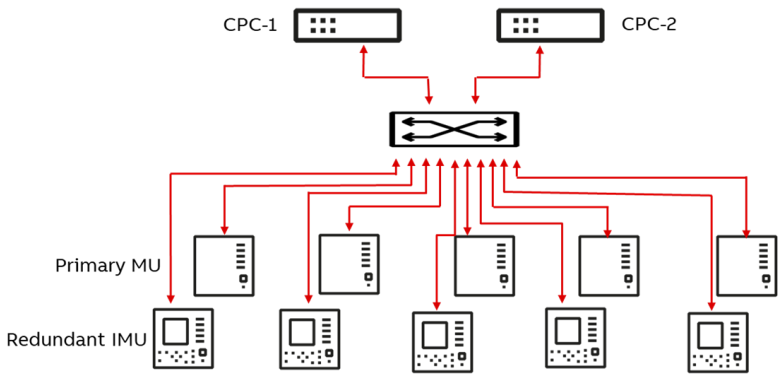

Redundant system #5

Single CPC unit, one MU, one IMU

Avoids single point of failure at CPC, MU, IMU

Doubling the MU reduces CPC protection capability to half

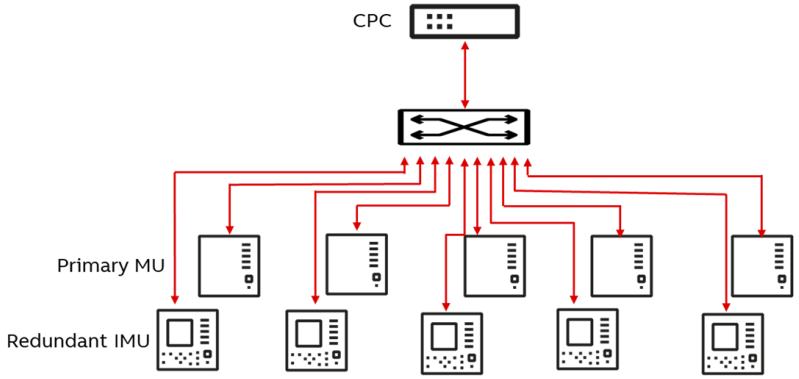

Centralized Protection & Control for Distribution Substations

Testing (1/2)

Traditional P&C test set up

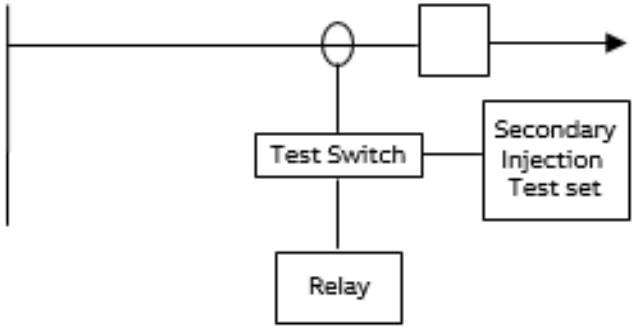

CPC test set up

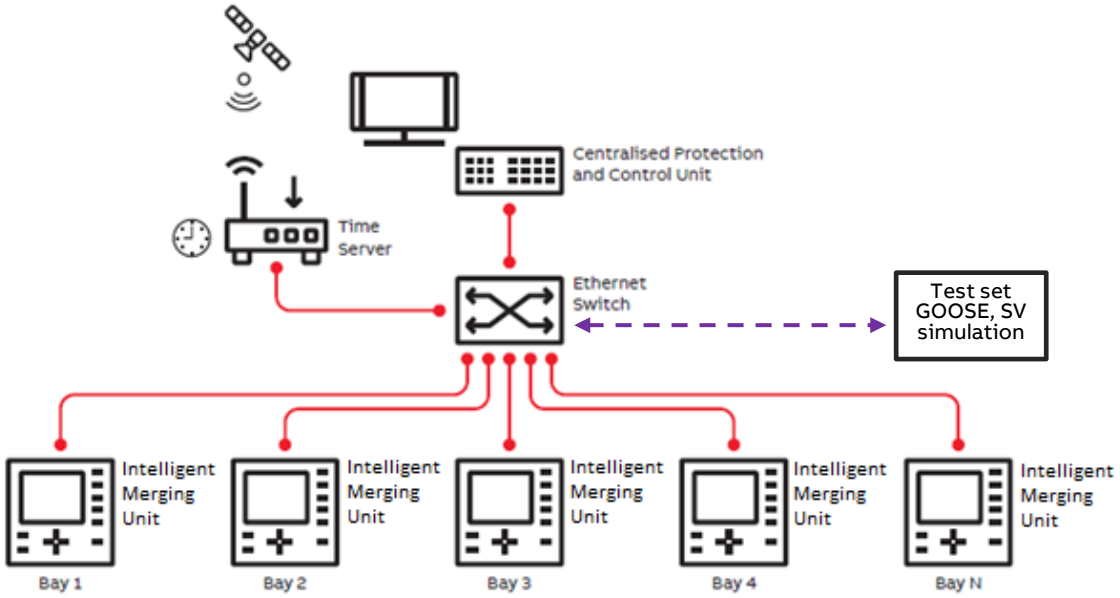

Centralized Protection & Control for Distribution Substations

Testing (2/2)

CPC test set up

CPC unit receive Sampled Values from MU / IMU

CB - 52a, 52b contacts, CB - trip and close signals from CPC to MU as GOOSE signals

All P&C interlocks are created within the CPC unit

CPC is put in the test and simulation mode

Secondary injection test set with GOOSE and SV simulation capability is connected to the network switch

Test set injects the operating quantities in the simulation mode for each feeder, one at a time.

In the simulation mode CPC ignores the real MU values

All the feeder can be tested without changing the test set up – **tremendous time savings!**

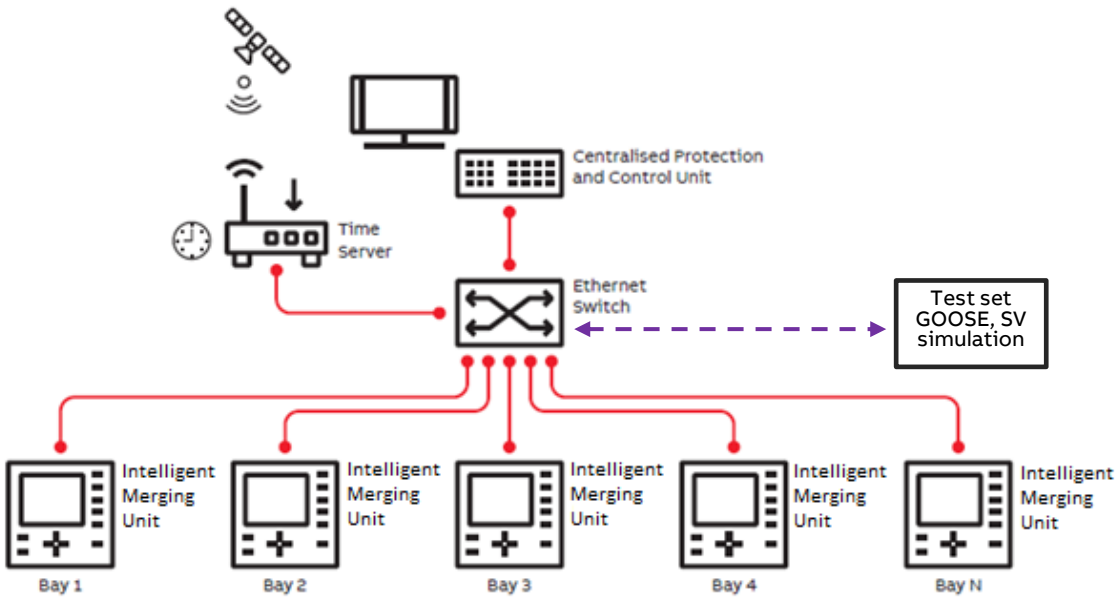

Centralized Protection & Control for Distribution Substations

Operation and maintenance

CPC benefits (1/2)

- All settings, configurations and applications at CPC unit
- Sequence of events, fault records, disturbance fault records available at CPC unit with accurate time synchronization
  - Drastically reduces time in fault identification and fault analysis
- Firmware upgrade, if necessary, is performed at the CPC unit
  - Tremendous savings in time and effort with firmware upgrades and associated testing of mulitiple devices in traditional approach

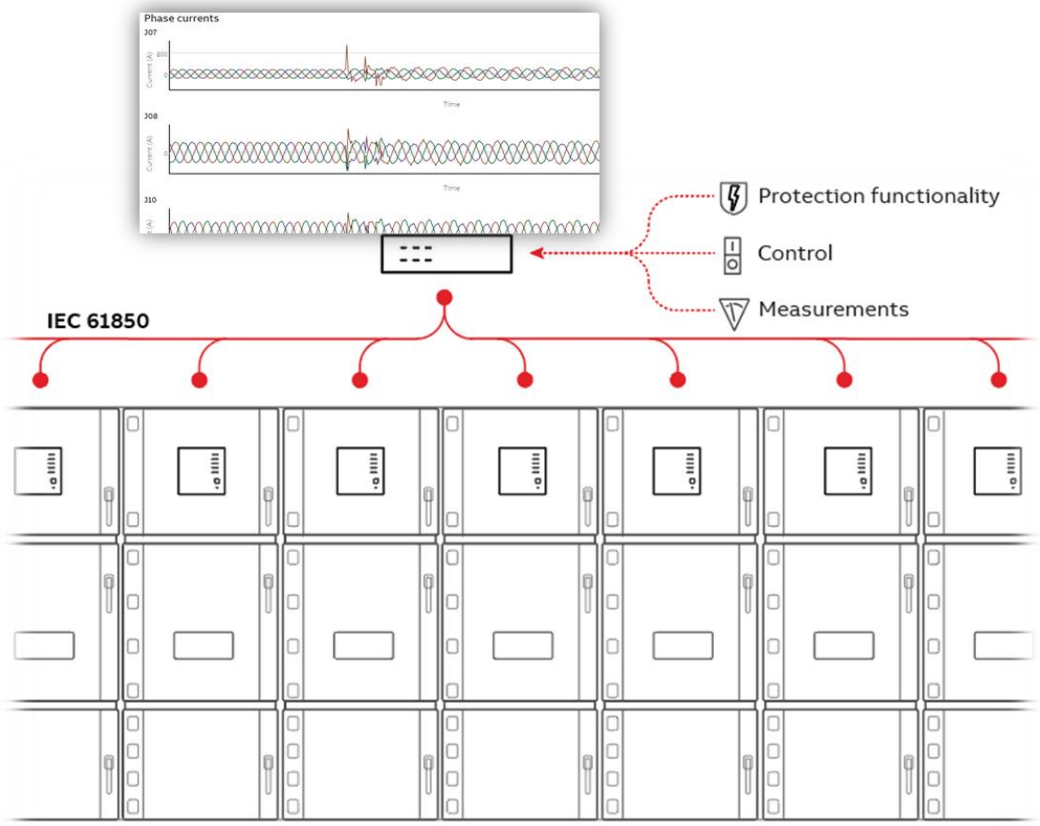

Centralized Protection & Control for Distribution Substations

Operation and maintenance

CPC benefits (2/2)

- Dynamically allocate applications to meet evolving substation protection & control needs like:
  - Addition of a feeder
  - Additon of protection functions
  - Conversion of a feeder bay to transformer bay
- CPC can unit double up as substation HMI
- Minimize spare requirement – CPC and MU are the main components

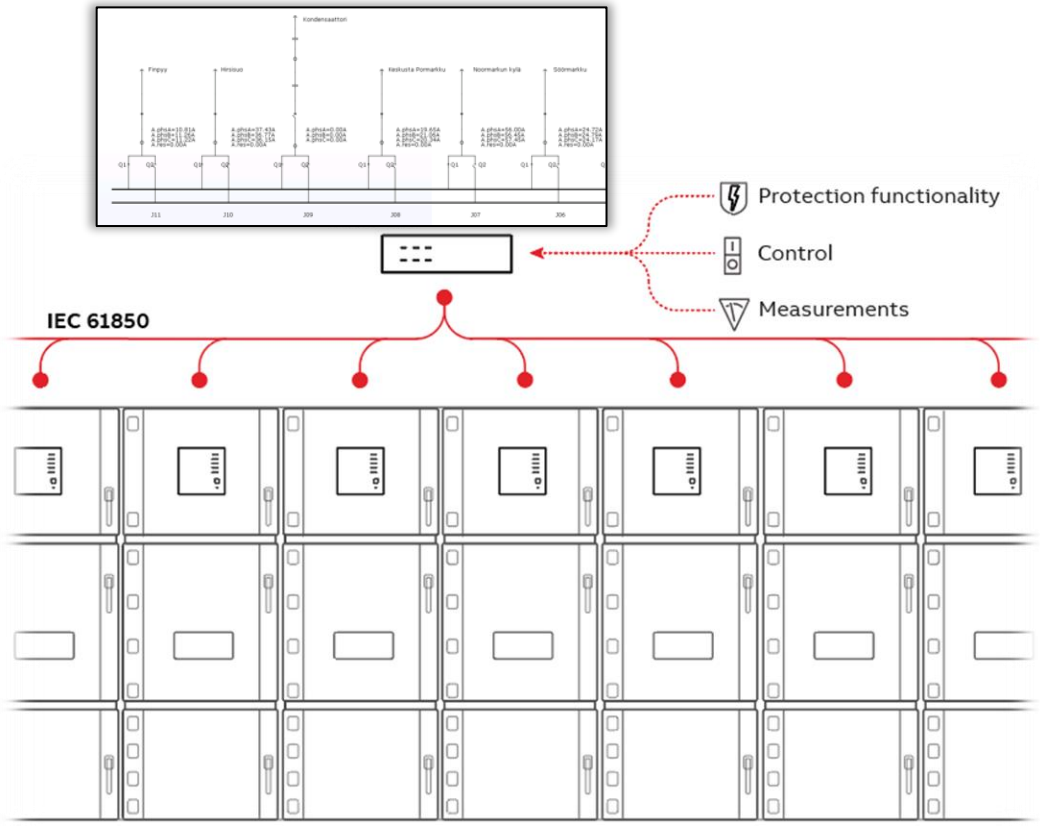

Centralized Protection & Control for Distribution Substations

Safety

Possibilities to enhance safety

- Testing the CPC involves digital signals only (need not deal with CTs and PTs directly)
- Remote control of breakers from CPC
- Possible to use current and voltage sensors in place of traditional CT/PT
- Possibility to integrate Arc Flash Detection in the CPC

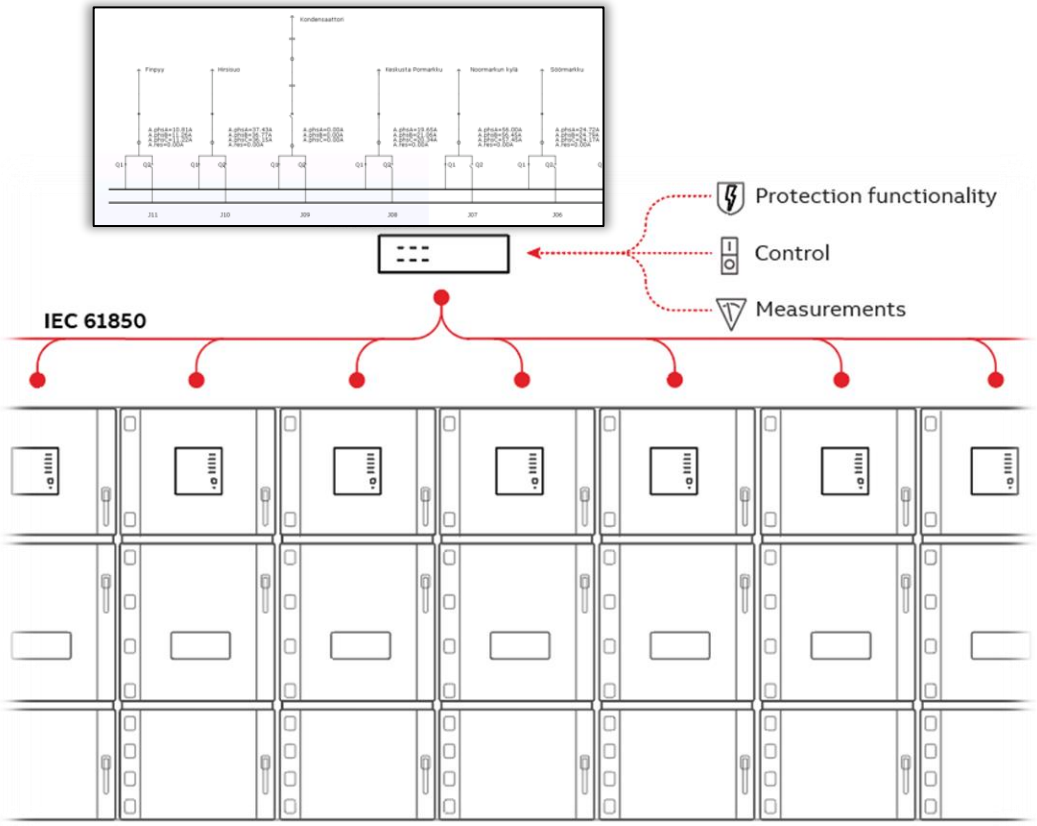

Centralized Protection & Control for Distribution Substations

Application examples

CPC - Common applications

Any protection application which require input from multiple feeders:

- Substation wide protection
- Bus bar differential protection
- High impedance ground fault detection
- Load shedding, Islanding and Loss of mains protection
- P&C interlocking applications
- Self healing control applications
- Substation wide disturbance recording
- Adaptive protection for DER applications

Advanced condition monitoring and asset management requirements

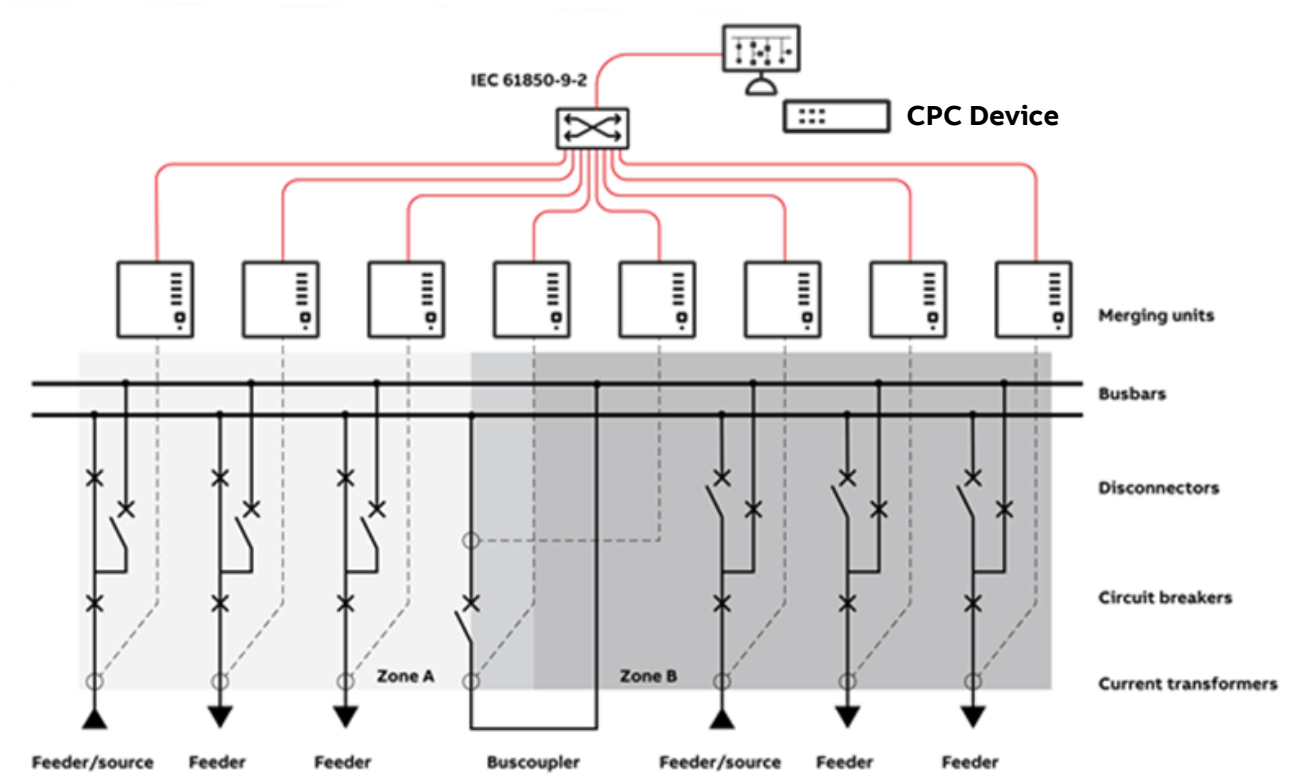

Centralized Protection & Control for Distribution Substations

Application examples

CPC applications

Greenfield projects

- MU installed in the yard, CPC & Network switch in the control house

Brown field (retrofit / upgrade) projects

- Existing CT/PT wiring from the yard to the control house
- MU, CPC, Network switch installed in the control house

MV switchgear application

- CPC, MU, Network switch installed in the LV cabinet of switchgear or standalone rack beside the switchgear
- If existing relays have MU capability, only CPC unit and Network switch needs to be added

Building digital substations

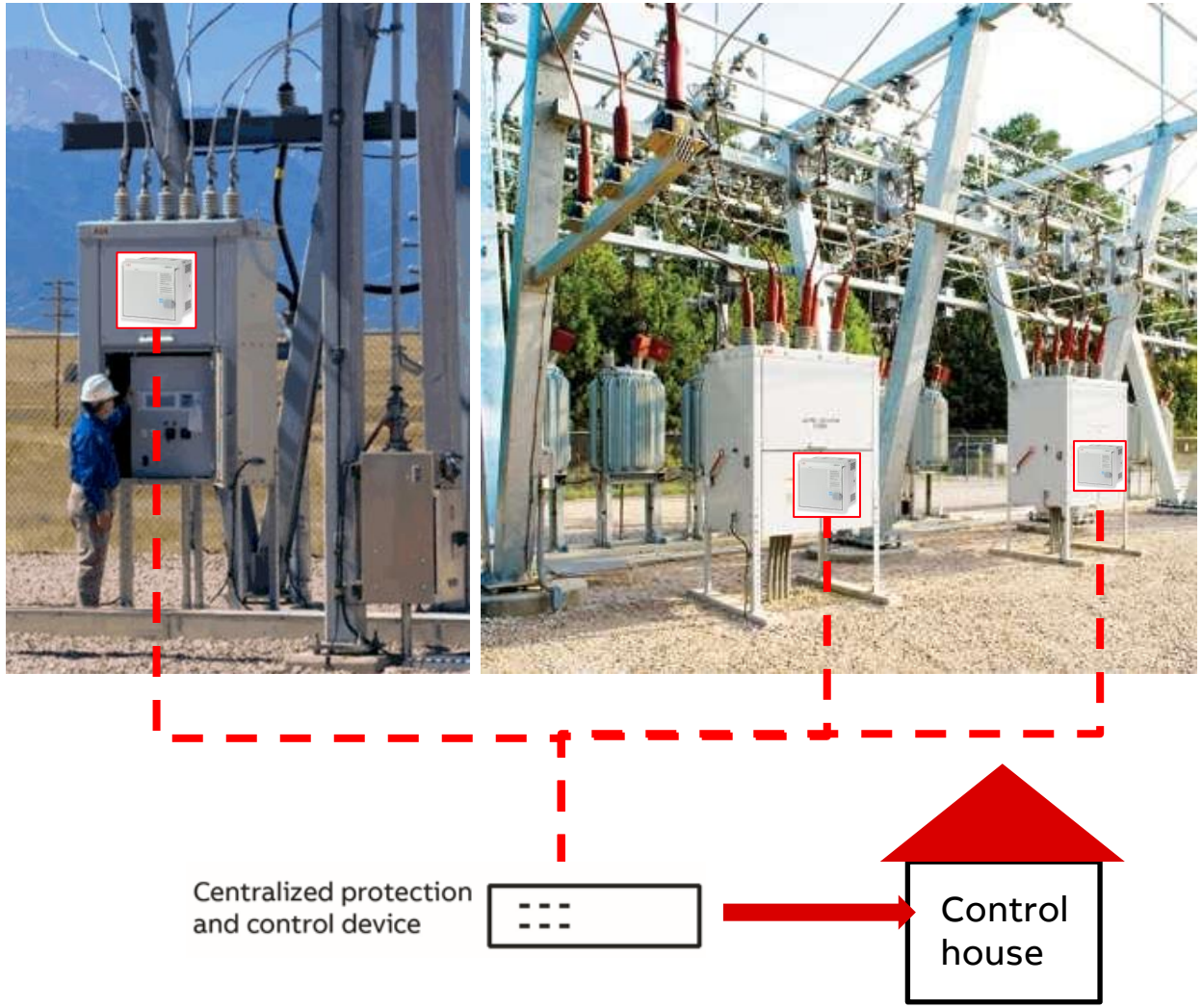

Centralized Protection & Control for Distribution Substations

Lessons learned from field installation

Utility – 110/20kV substation in Finland (1/2)

Noormarkku - 13 feeder substation

Relays with conventional OC + EF (distribution feeders, cables/lines) upgraded with MU functionality (IMU)

Needed special ground protection due to weatherproofing and UG cabling – added in CPC unit

All bay level protection functionality for all feeders added in the CPC

Time synch. as per IEEE 1588 PTP (in addition to SNTP)

Based on IEC 61850 Ed2, tripping as per GOOSE type 1A, Class P1 (<=3 ms)

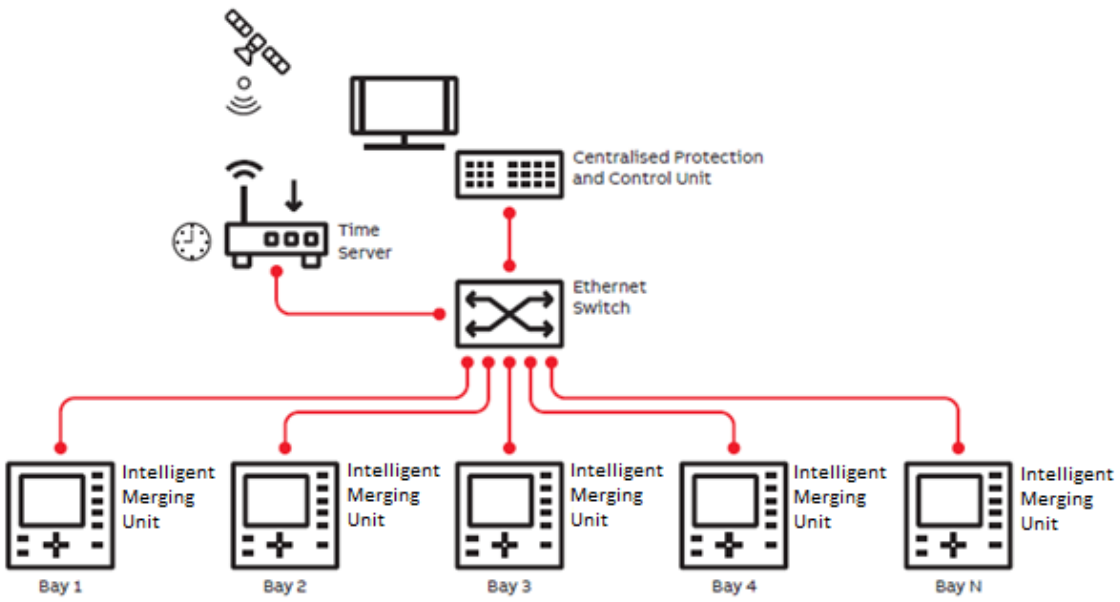

Centralized Protection & Control for Distribution Substations

Lessons learned from field installation

Utility substation in Finland (2/2)

Initially CPC unit in non-trip mode (parallel detection of faults & tripping event generation)

Subsequently taken fully into service (CPC as main protection, IMU units as backup protection); **in operation since May 2017**

Testing and commissioning done on live substation without interruptions

System is in successful operation for over 3 years

CPC detected 99 overcurrent faults and 69 ground faults during this period

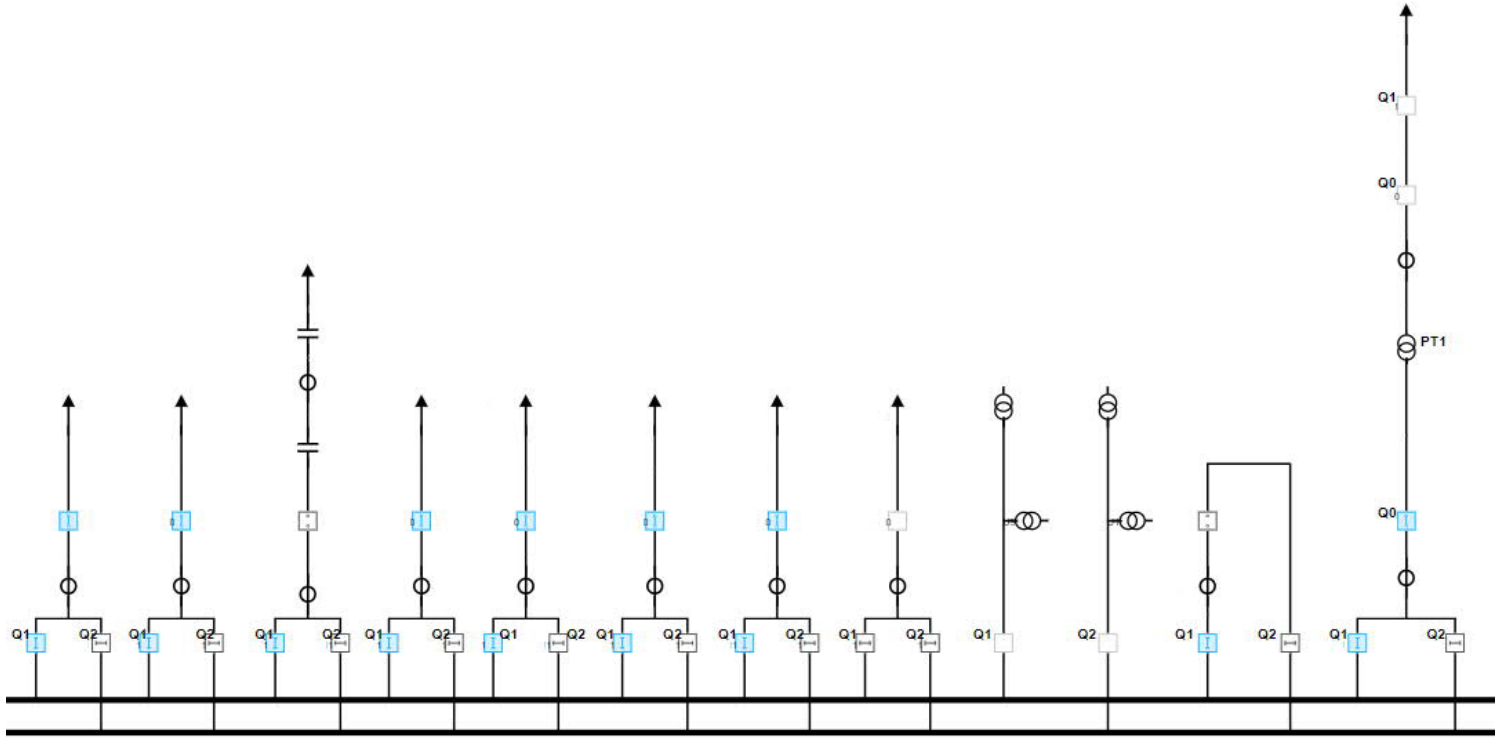

Centralized Protection & Control for Distribution Substations

Conclusion

CPC system offers unmatched flexibility …

- Takes full advantage of **proven IEC 61850 standard**
- Redundant protection, redundant communication architecture **enhances reliability and availability of protection**
- Provides **flexibility to build optimal protection schemes and freedom to adapt to changing network** requirements
- Improves **P&C engineering efficiency**
- Drastically improves **operation and maintenance efficiency**:
  - substation wide measurements, events, DFRs available at CPC
  - minimizes spare requirement
  - firmware upgrades, if required, performed at CPC unit and not on mulitiple relays

… in substation protection & control

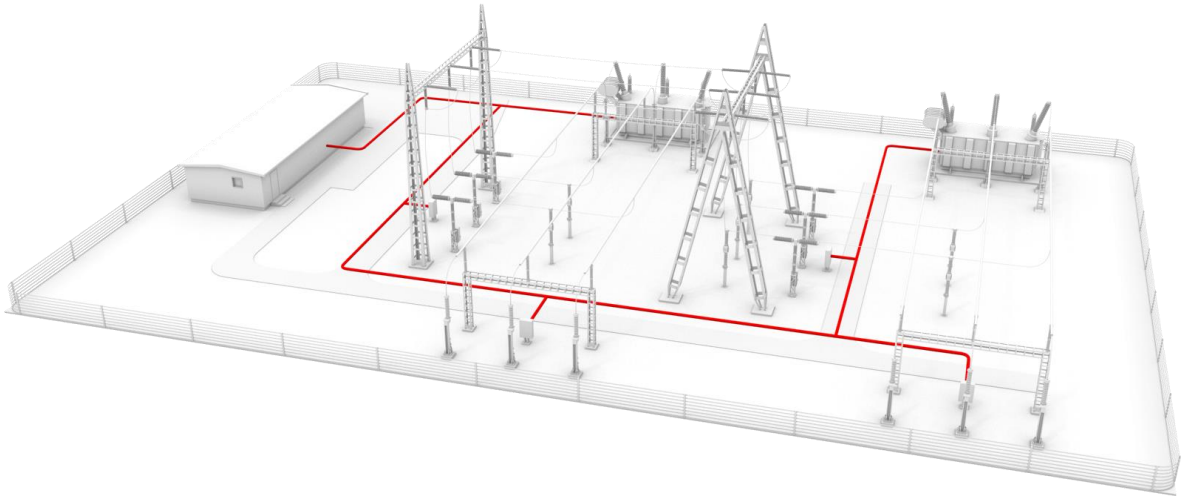

CPC enhances reliability, availability, flexibility and improves operating cost efficiency of Substations

Thanks for your attention!

QUESTIONS?