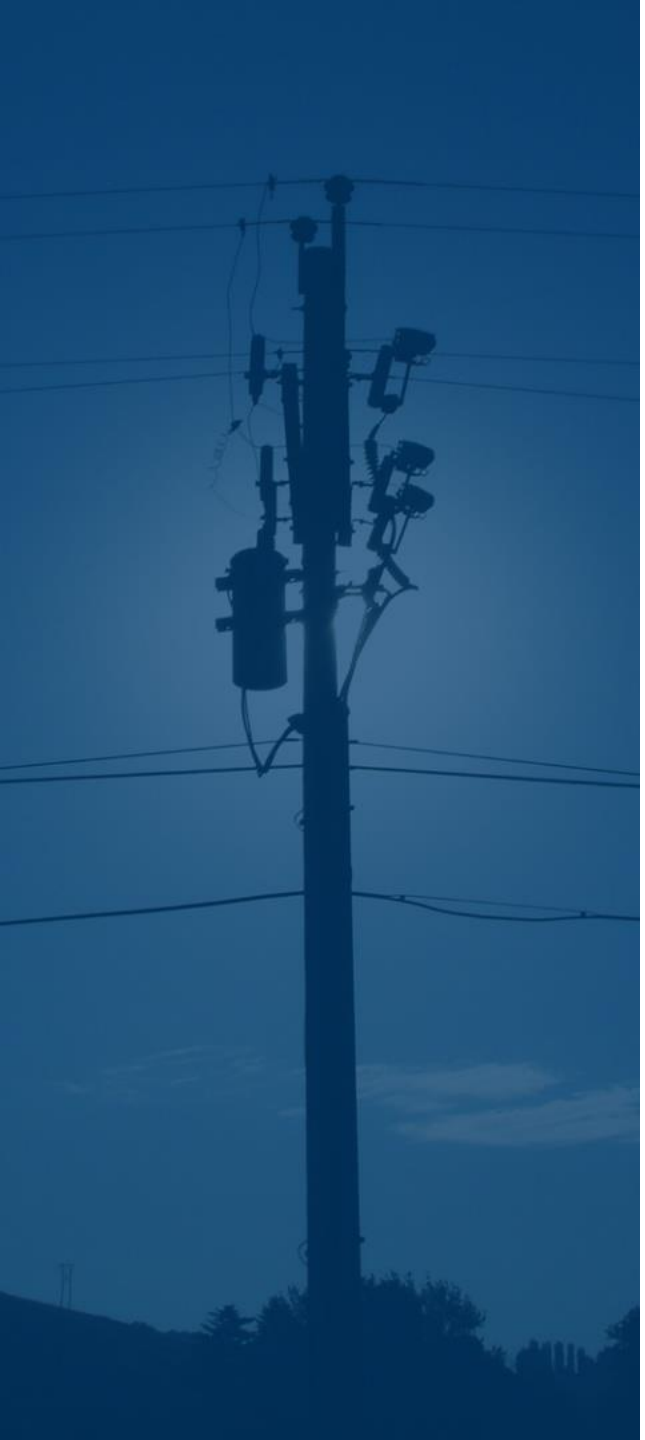

Case Study: High-Density Distribution Coordination Using High-Speed Communications

Robert M. Cheney and John T. Thorne
Alabama Power

Robert Van Singel, Andrew Hanson, Chris Anderson, and Joshua Hughes
Schweitzer Engineering Laboratories, Inc.

What is an HDC scheme?

Overcurrent coordination of many devices with fast operating times

Peer-to-peer communications scheme (vs. centralized)

Blocking signal that is sent over Ethernet fiber when fault current is seen (IEC 61850)

What is an HDC scheme?

Allows device to trip fast – unless it receives two blocking signals

Uses existing time-overcurrent coordination if two blocks are received

Clears fault within 7 cycles, regardless of location or magnitude limitations

Why is an HDC scheme needed?

Increasing recloser installations allows for ~400 utility customers in each line section, improving SAIDI and SAIFI

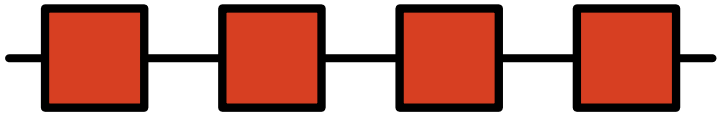

This increase results in significantly more devices that need to coordinate to maintain selectivity

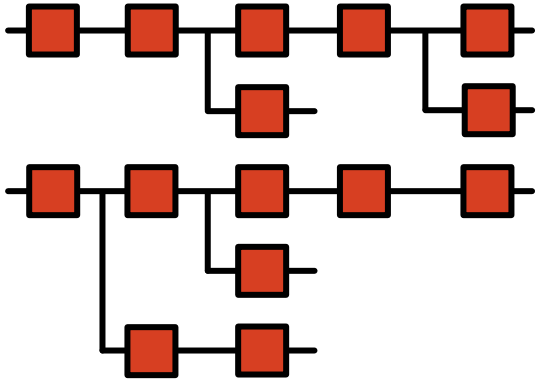

Maintaining standard coordination margins can therefore be difficult or impossible

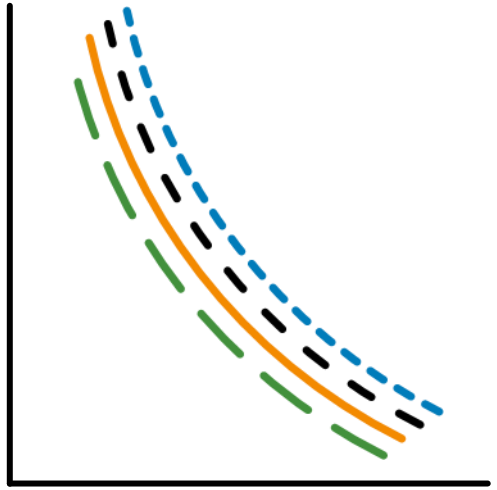

Traditional coordination

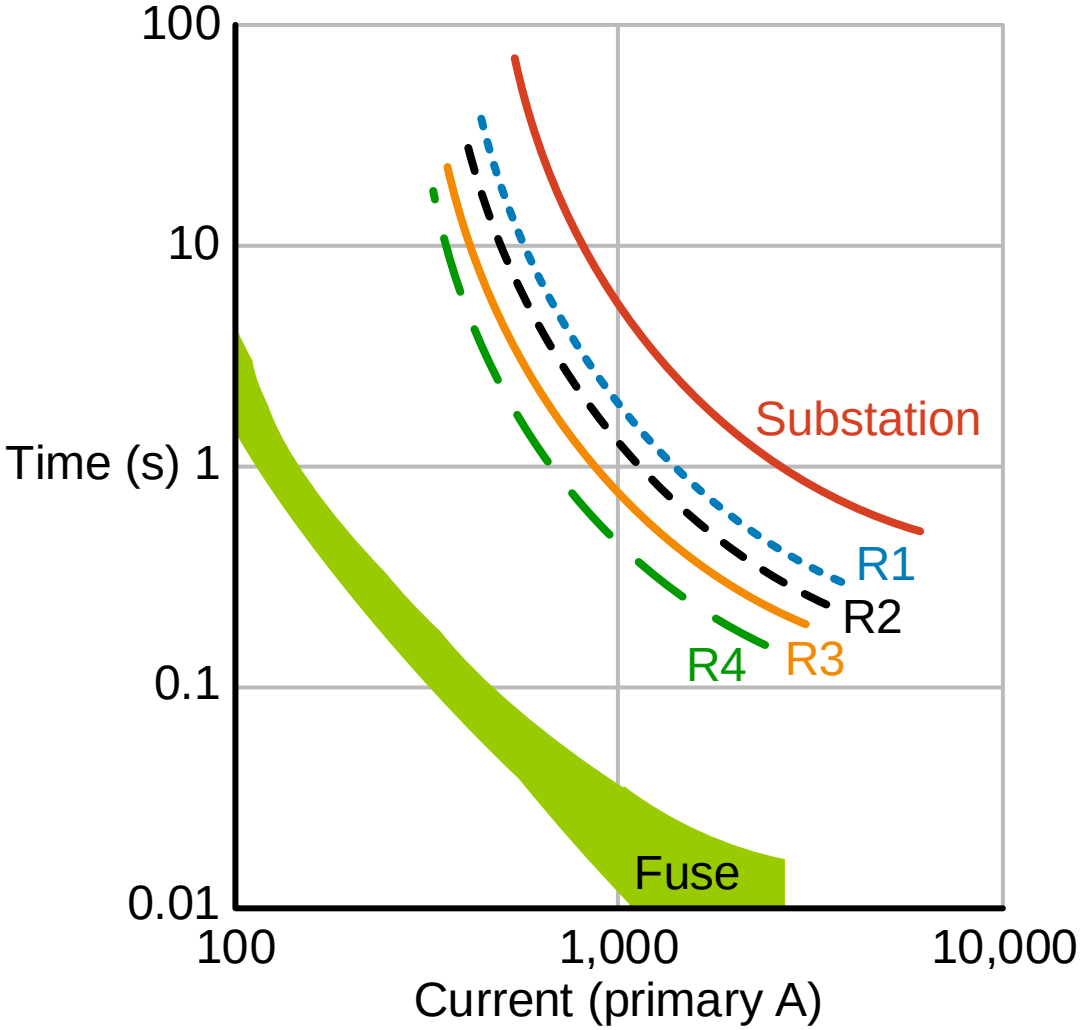

- All relays must coordinate to maintain selectivity
- Upstream fault time may be measured in *seconds*
- Some margins might not coordinate to keep trip times down

HDC principles

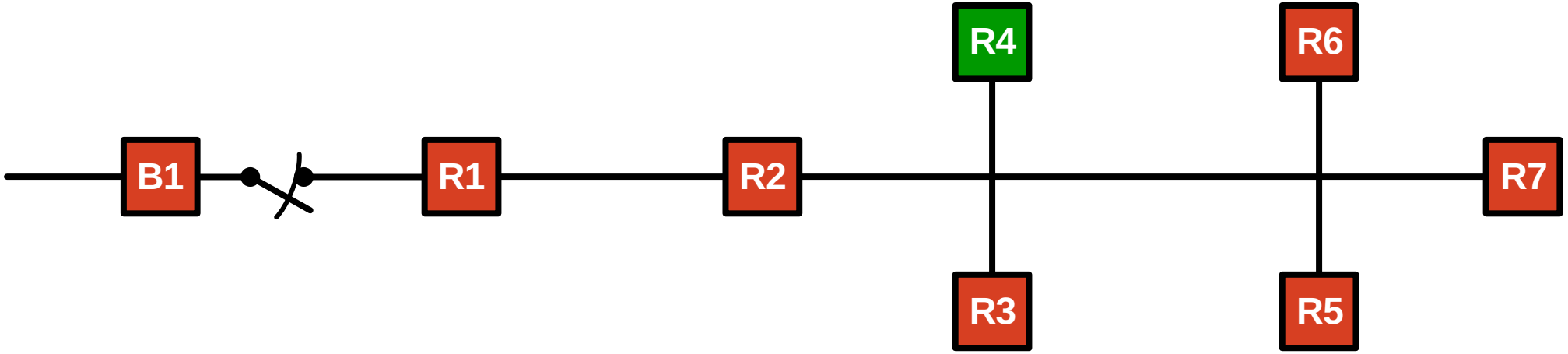

All devices publish block signal when current is over minimum phase trip level

Device trips fast after short communications time delay if less than two block signals are received

HDC principles

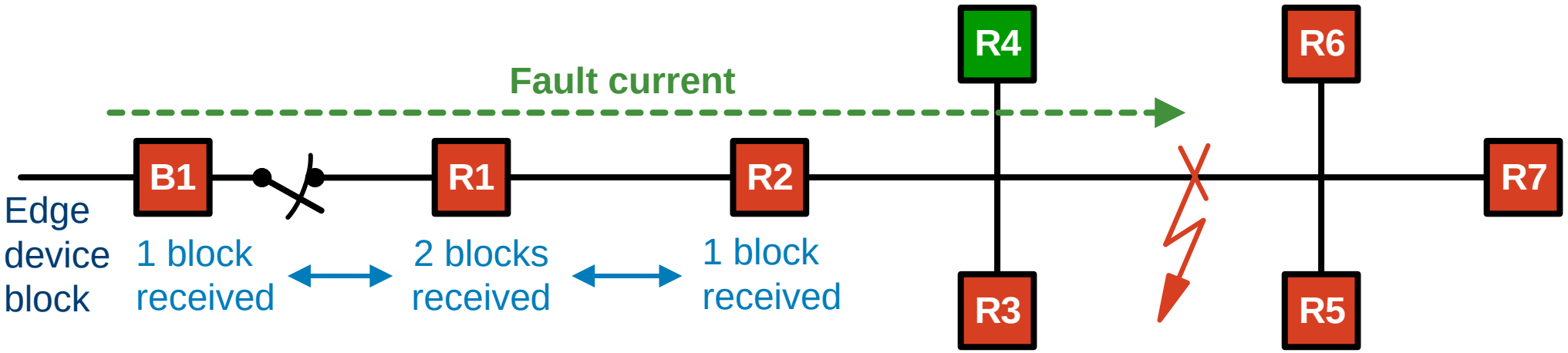

Always-functional fast and delay curves

If communications fail, all faults cleared with standard coordination

Minimum trip pickup

Set below most sensitive high-current trip

Comm-supervised fast trip

3-cycle delay (provides time for block receipt)

Coordination with noncommunicating laterals (fuses)

Traditional coordination vs. HDC scheme

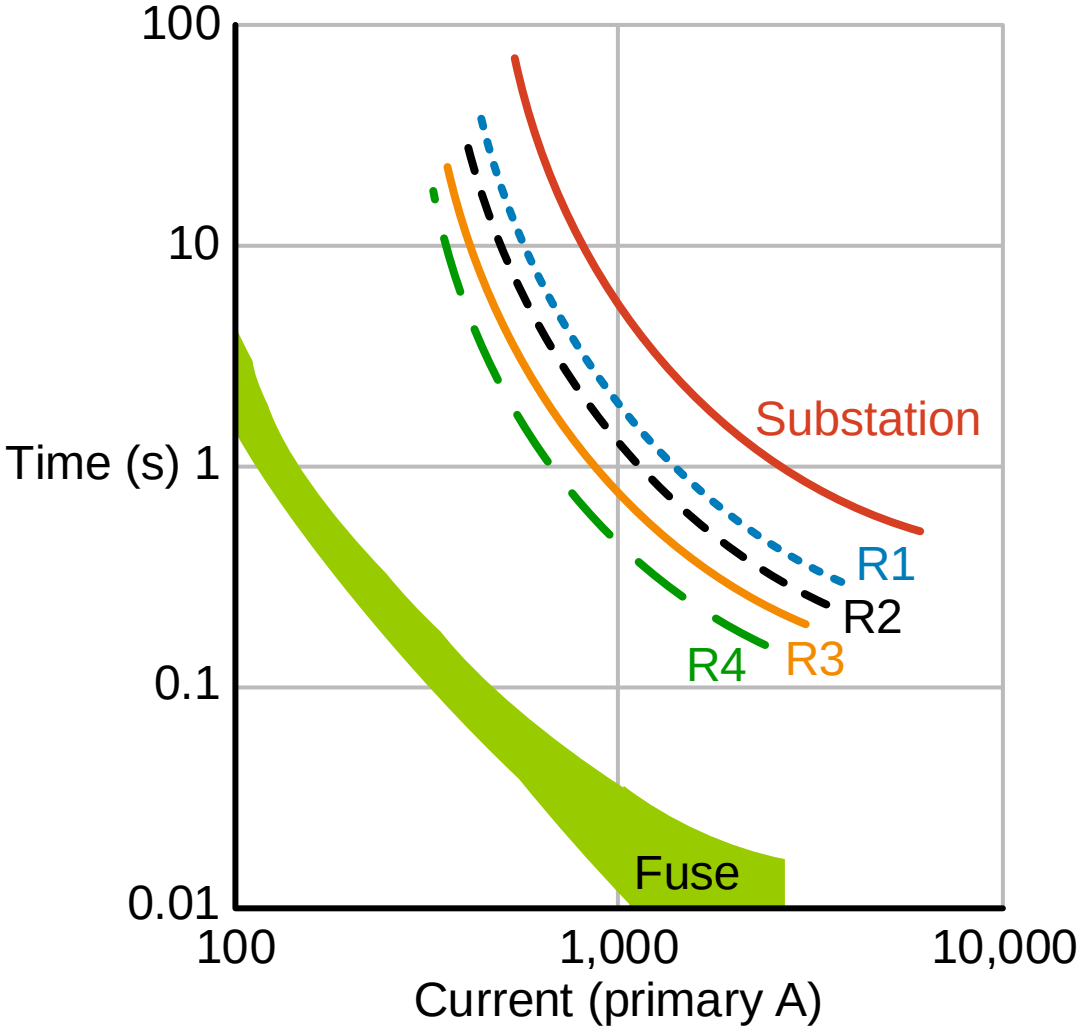

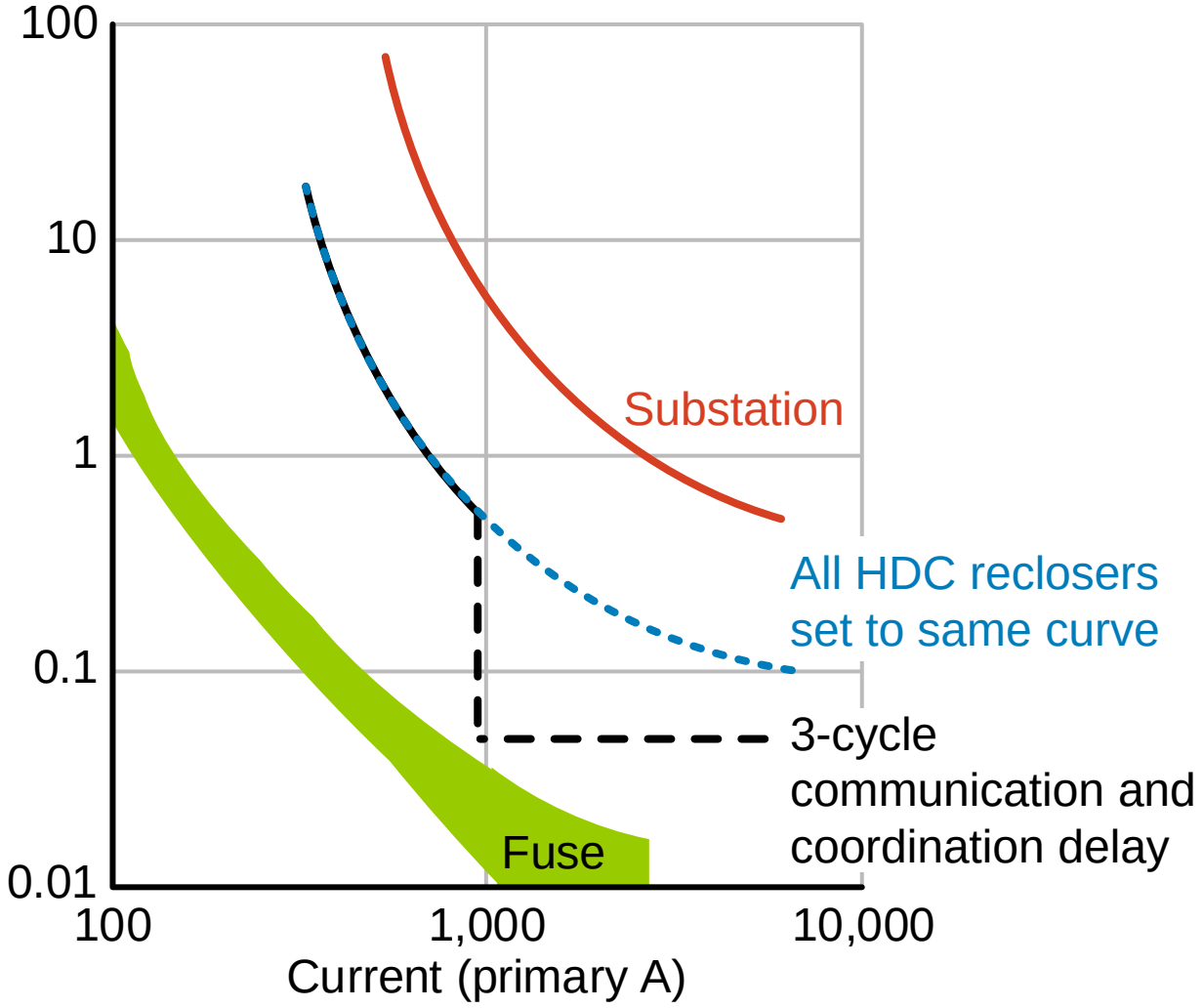

Relay logic – send block

HDC scheme implementation

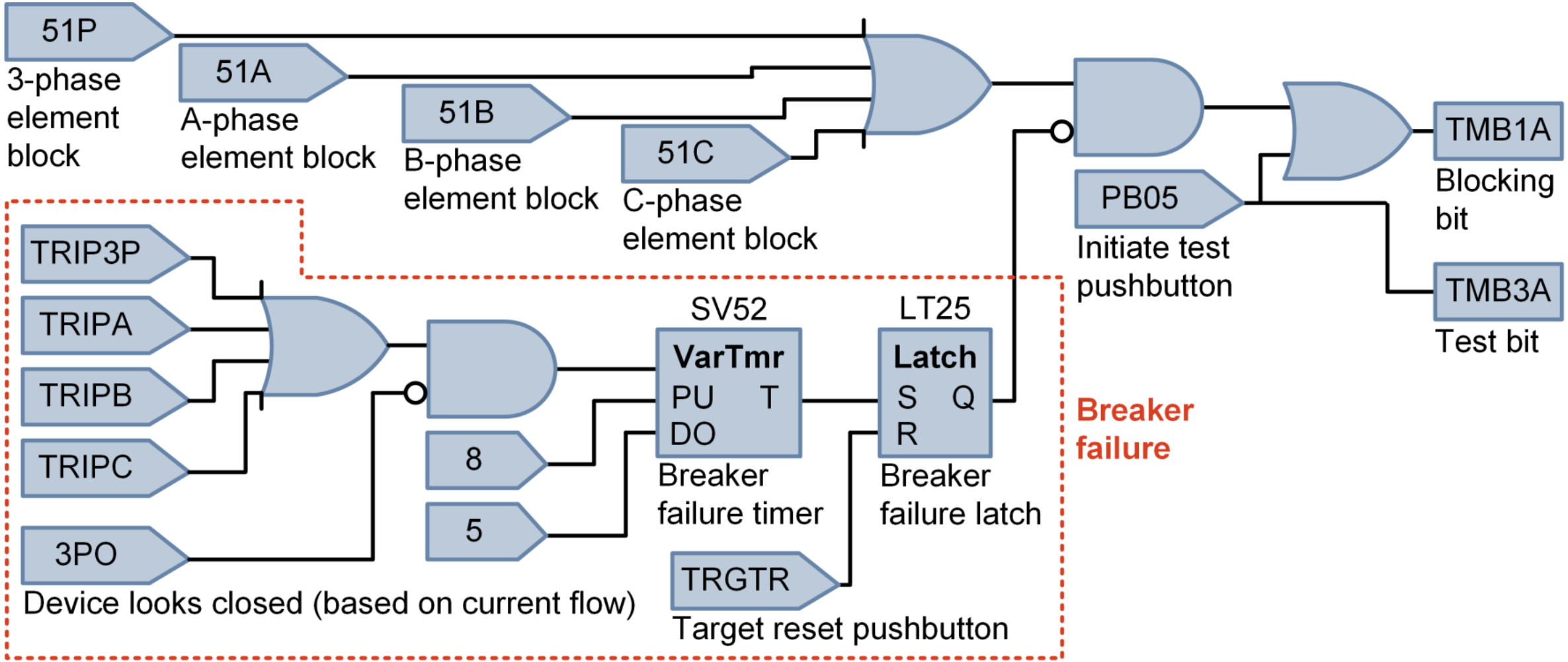

Relay logic – block received

HDC scheme implementation

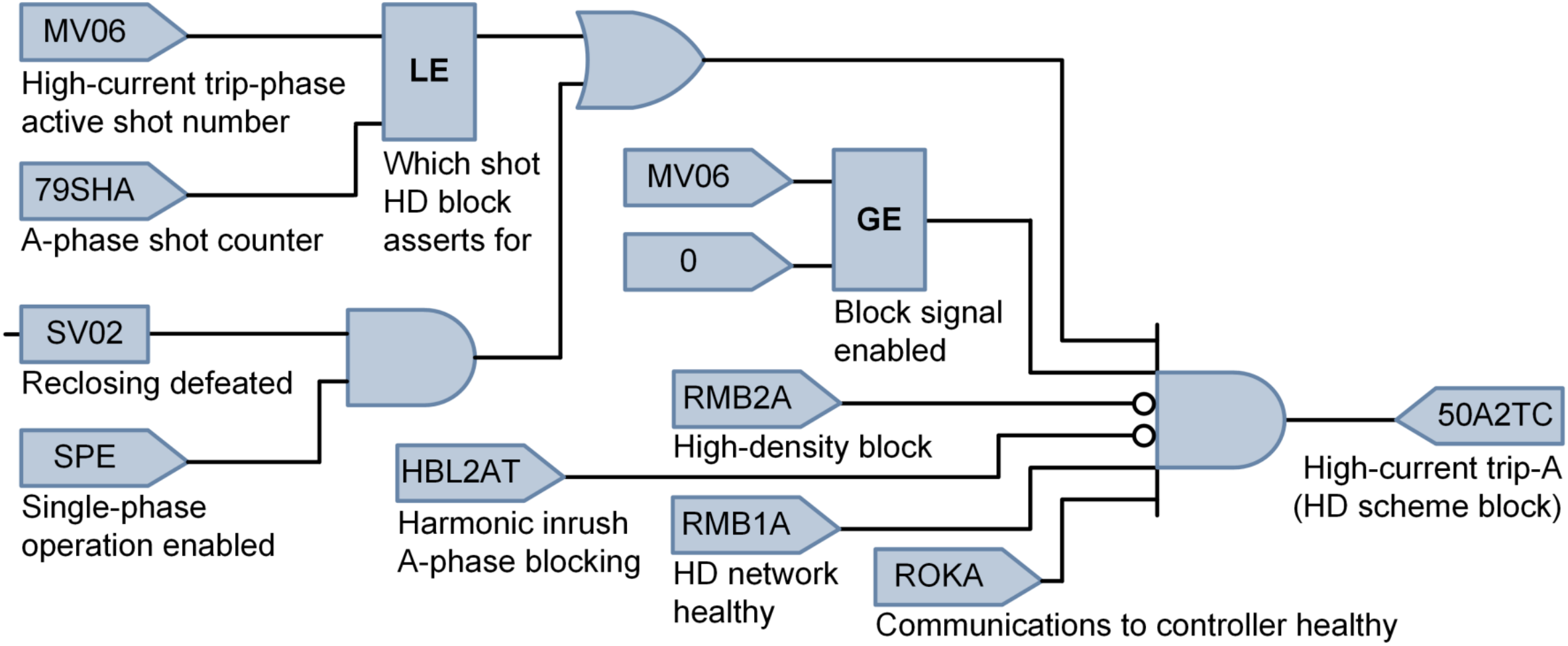

Edge devices

- Reclosers at network boundaries can receive only one block
- Second block signal is provided by edge logic
- Faults outside network are time-delay cleared

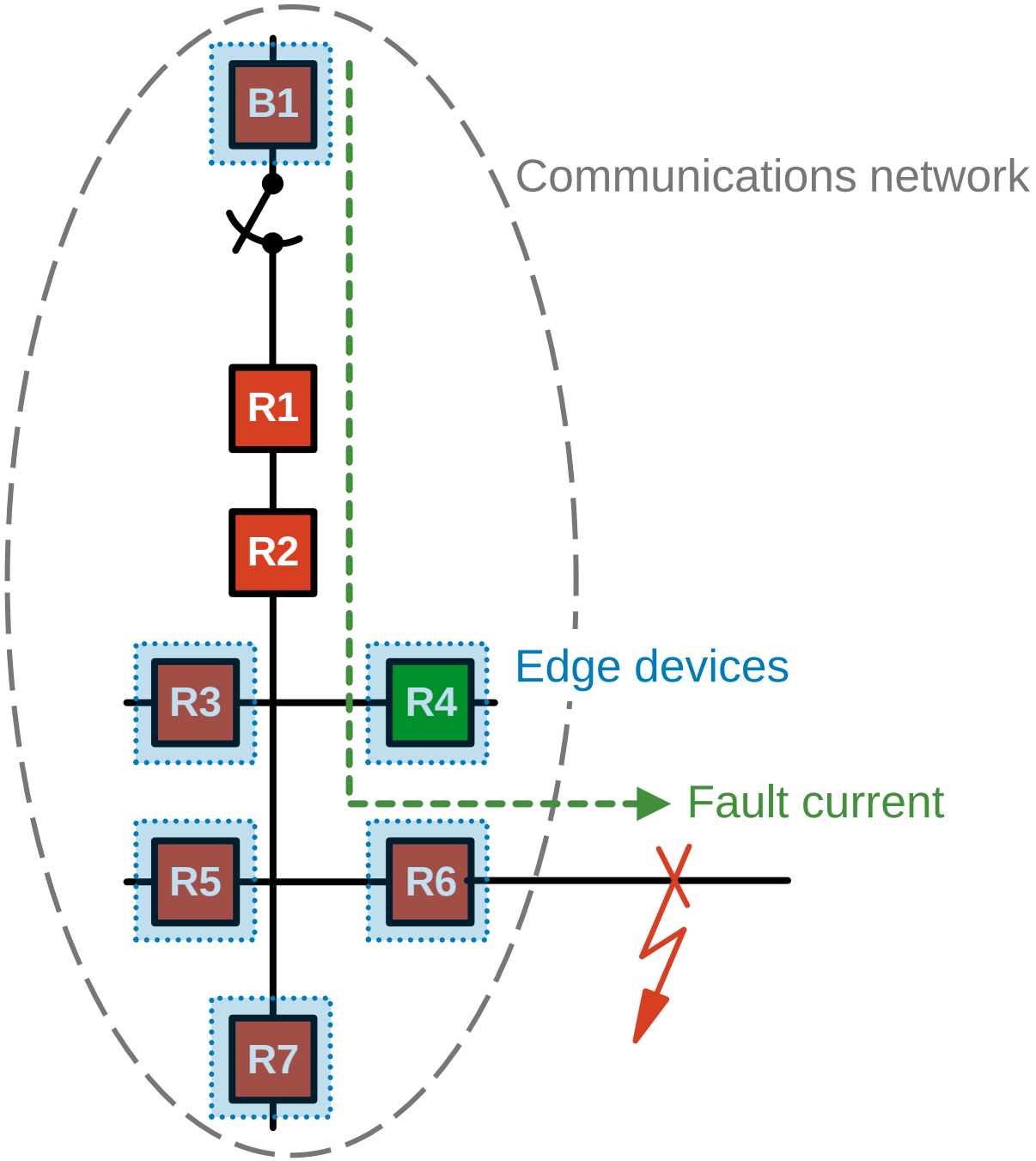

Example system

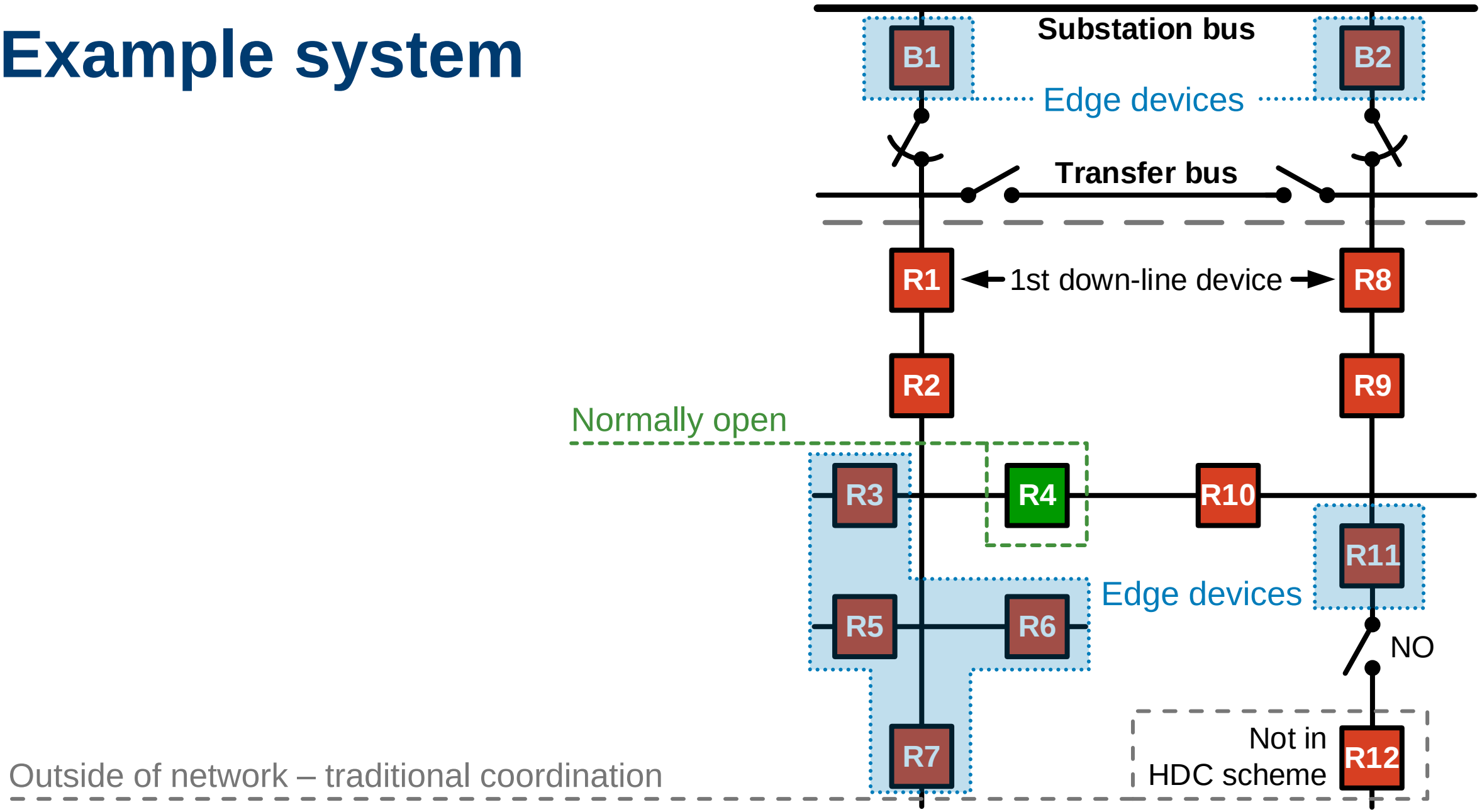

Fault near substation

- Fault occurs before first down-line recloser
- Only B1 detects fault and transmits block
- B1 trips on fast curve after requisite 3-cycle delay

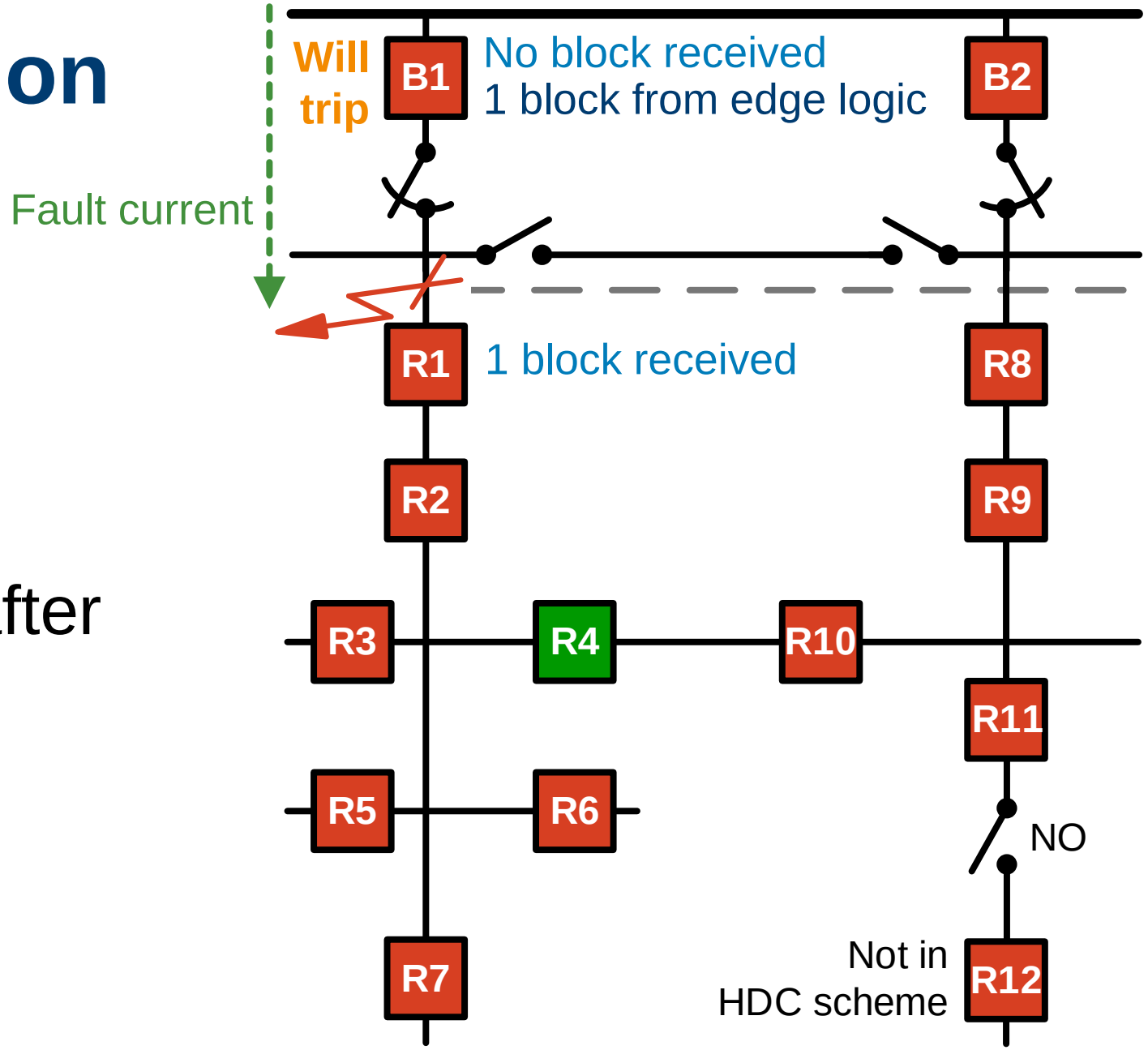

Fault near substation

- Fault occurs past first down-line recloser
- B1 and R1 detect fault and transmit block
- R1 trips on fast curve after requisite 3-cycle delay

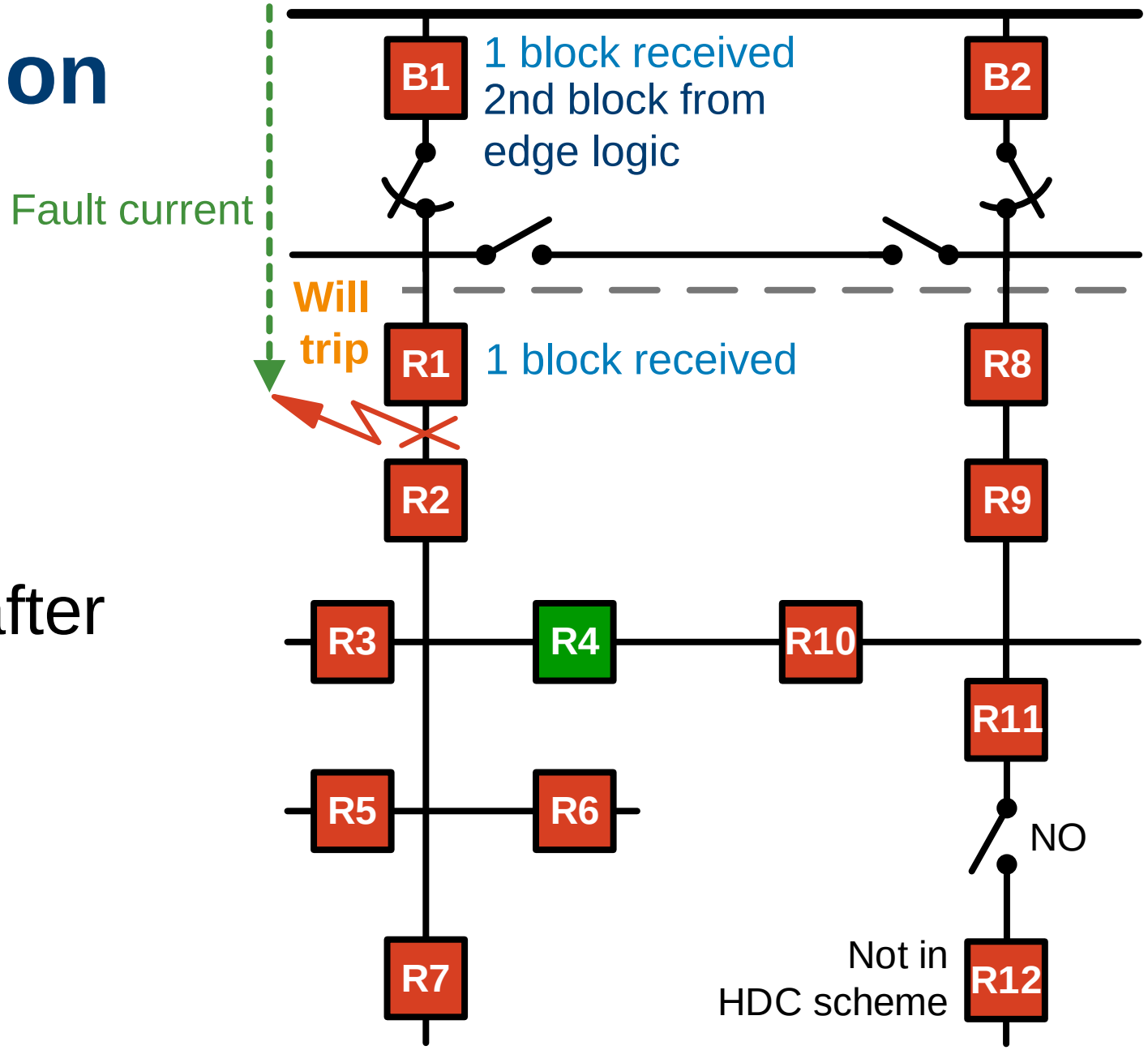

External fault

- Edge device R11 gets second block from internal logic
- R12 clears fault with traditional time-overcurrent delay
- If R12 fails, original coordination takes over and R11 clears fault

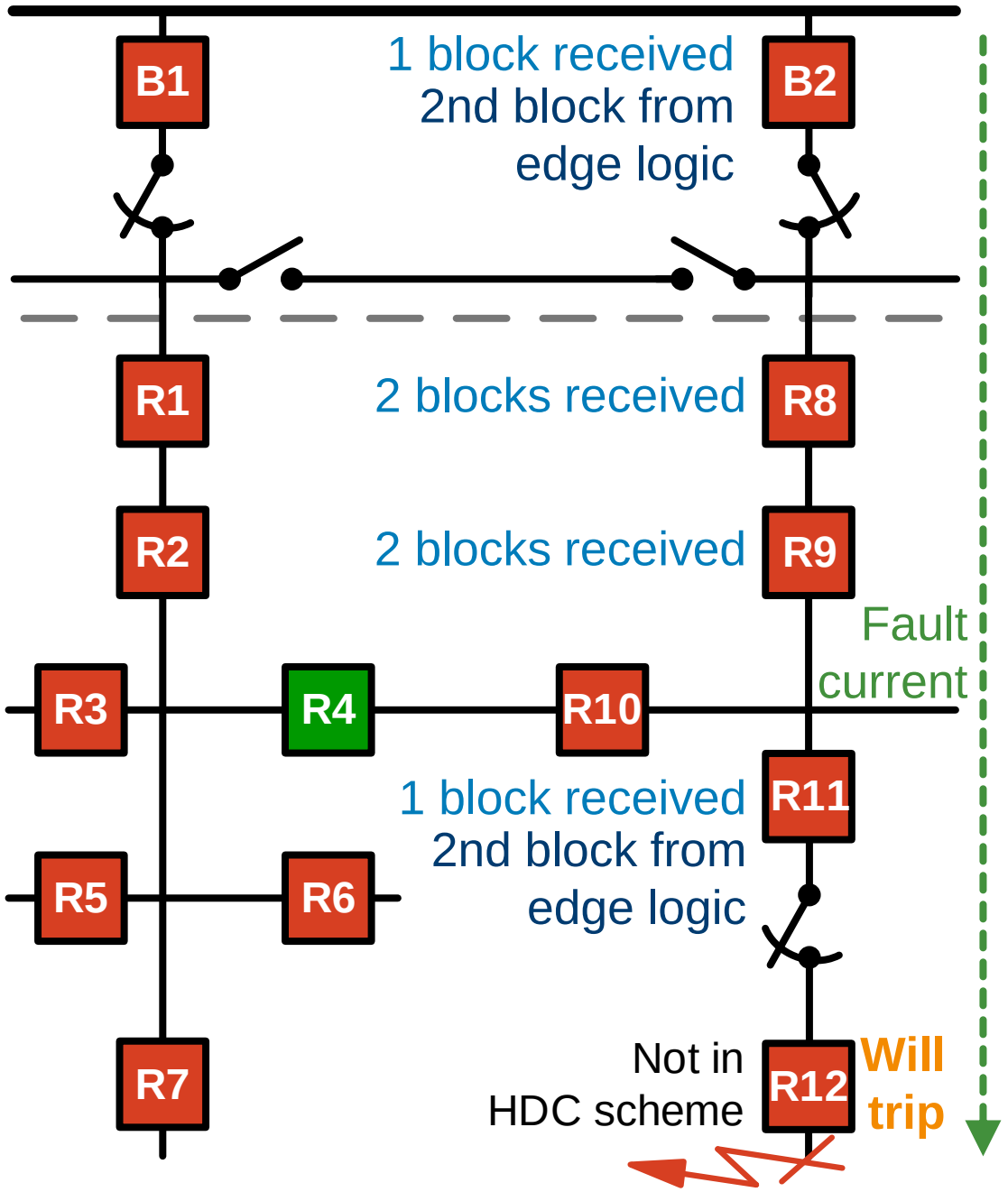

External fault

R11 clears fault with traditional time-overcurrent delay

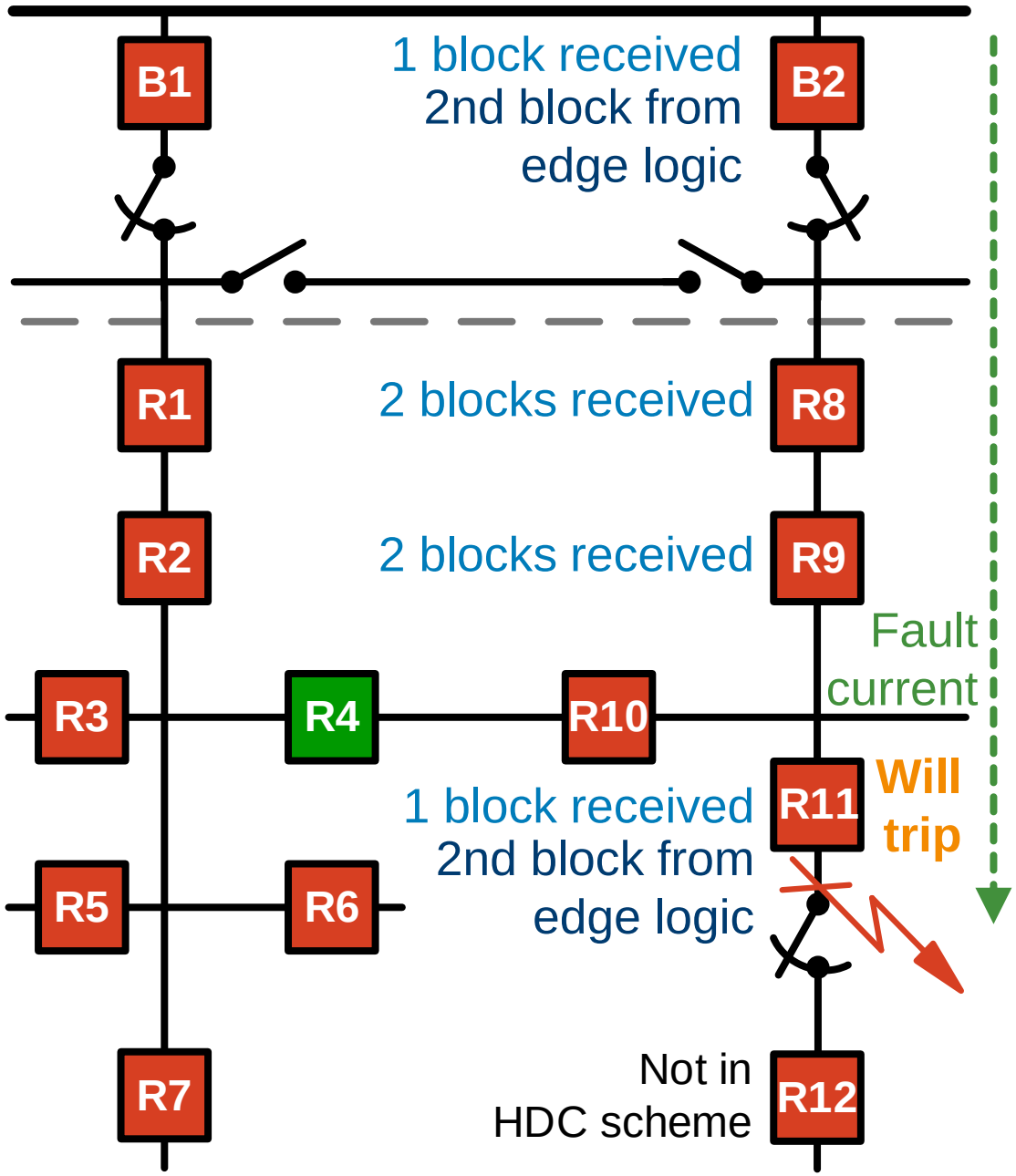

Back-feed fault

- R11 receives first block from communications network (from R10)
- R11 trips if fault is between R10 and R11

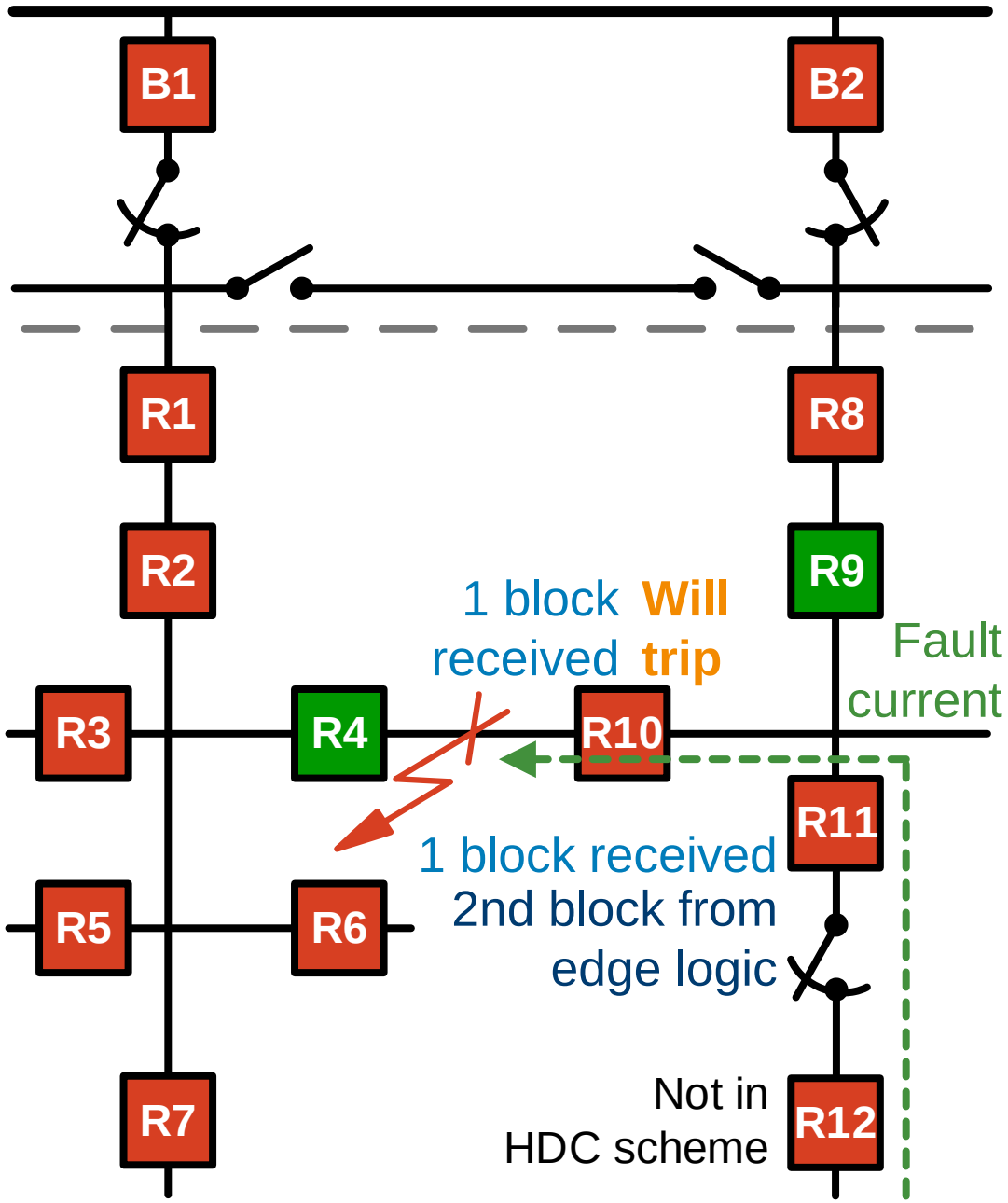

Alternate feeder fault

- Feeder breakers must subscribe to all first down-line reclosers, but those reclosers subscribe only to original feeder breaker
- GOOSE subscriptions are programmatically limited by design to 15 devices
- All feeder topologies in scheme can have no more than 15 electrically adjacent devices
- This limits feeders exiting substation to 15 feeders total

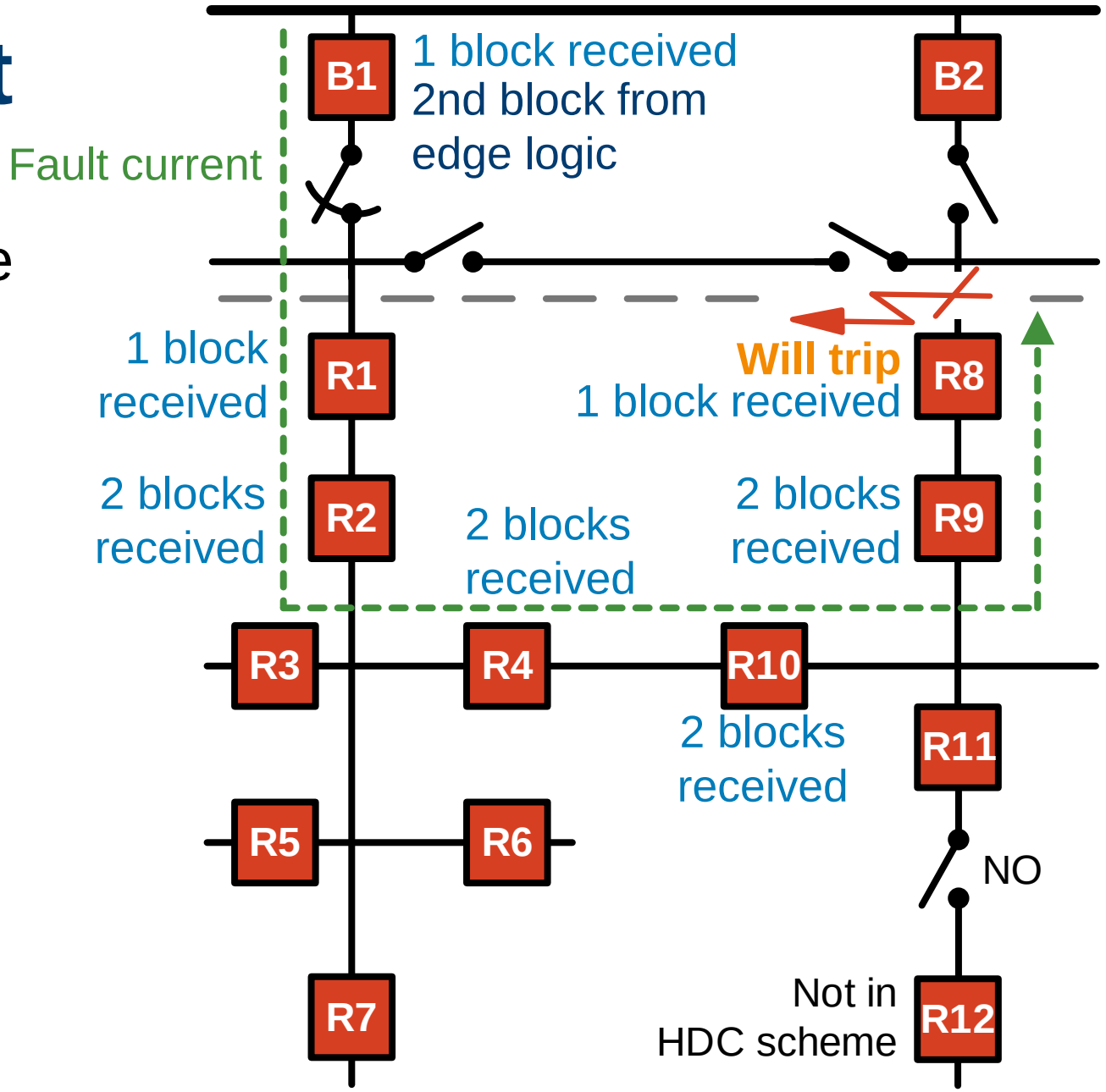

Transferred feeder fault

- First recloser outside substation fence on faulted feeder does not get a block from B1
- R8 trips – not desirable but acceptable
- Transferred feeders are temporary conditions

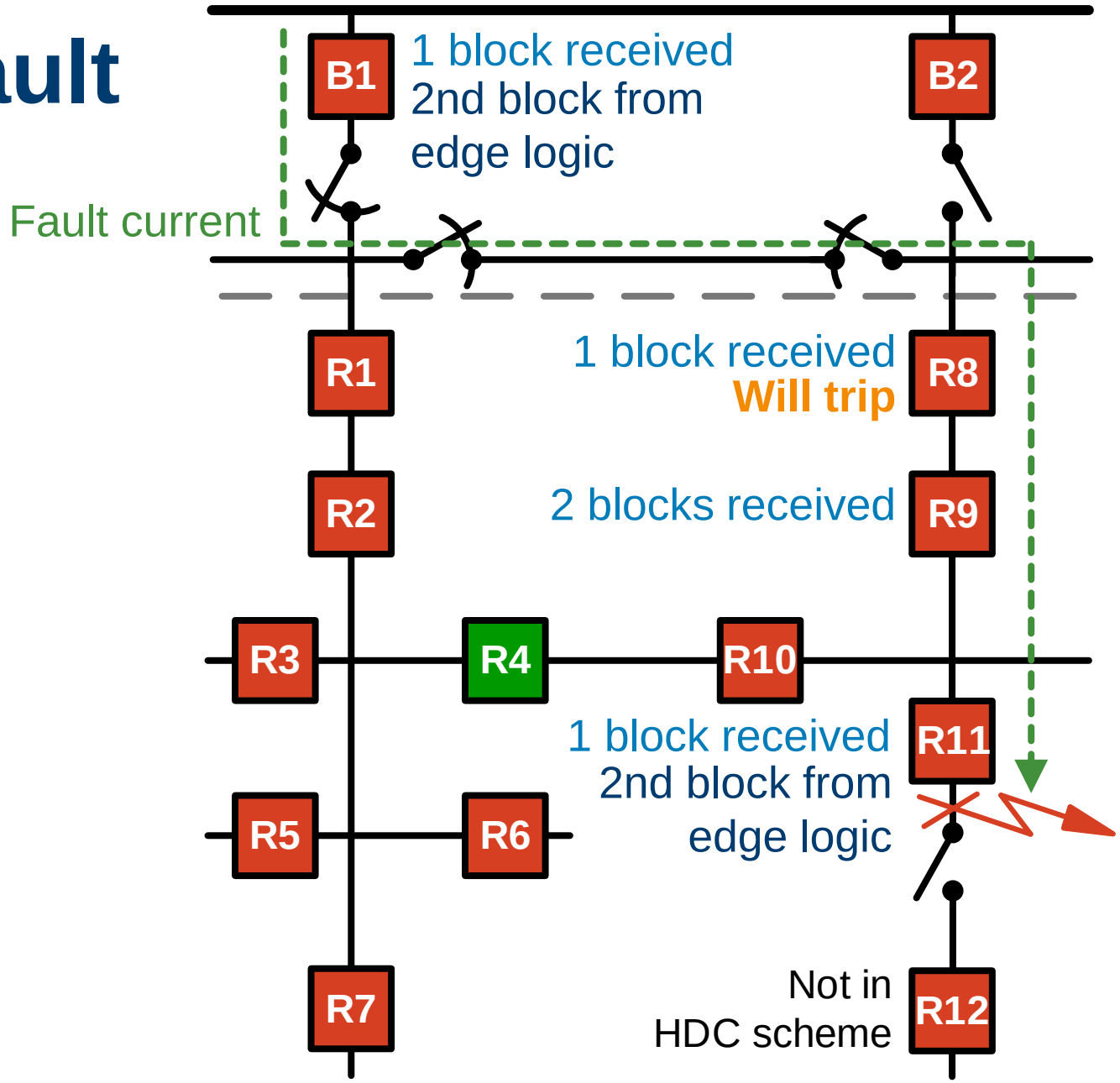

Looped feeder fault

- Scheme foregoes coordination during short time system is tied together
- Fault is cleared with traditional time-delay overcurrent protection
- Most likely fault location is recently closed switch

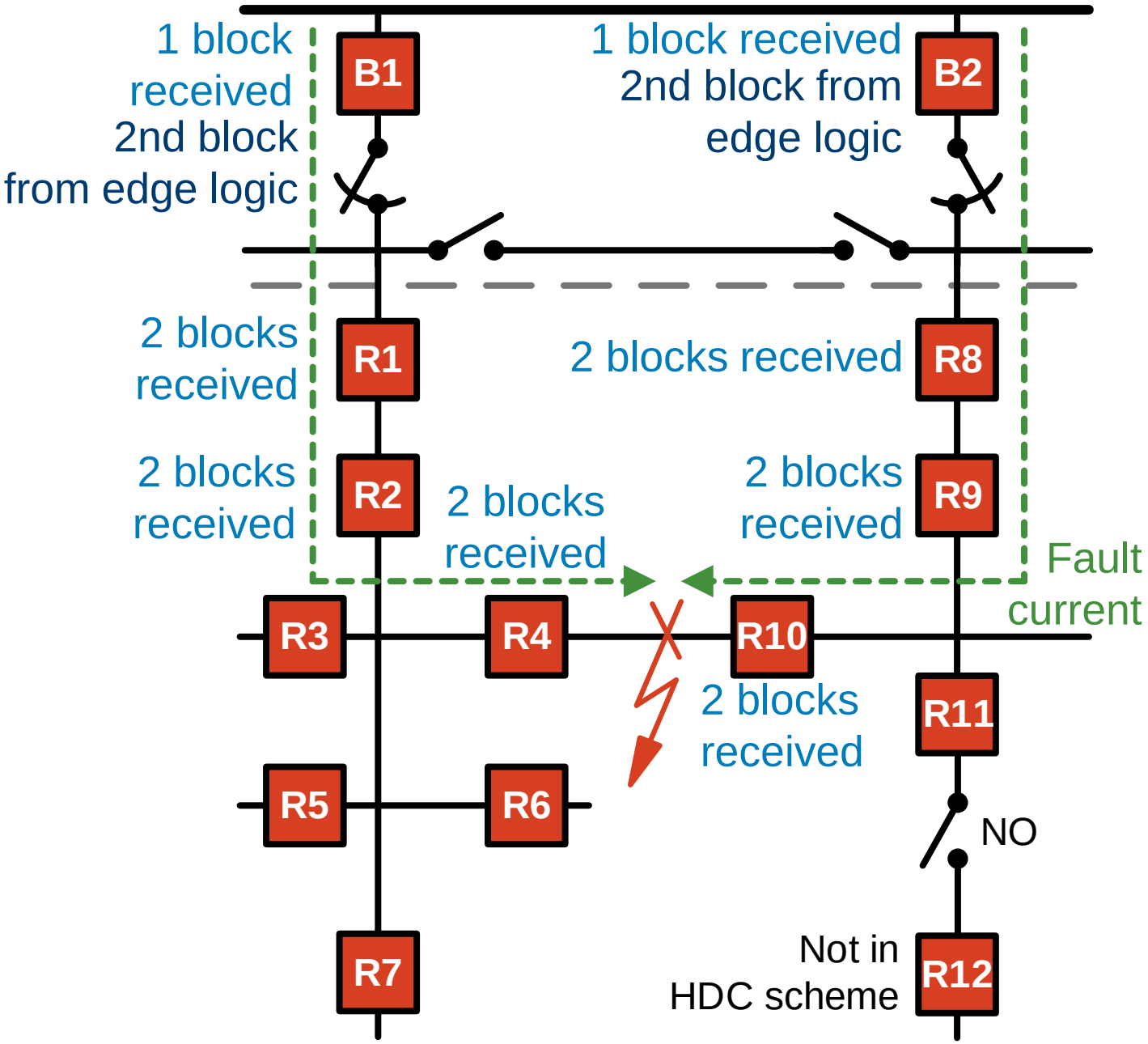

Trip failure fault

- Breaker failure logic stops block signal
- Next upstream device trips when block signal stops

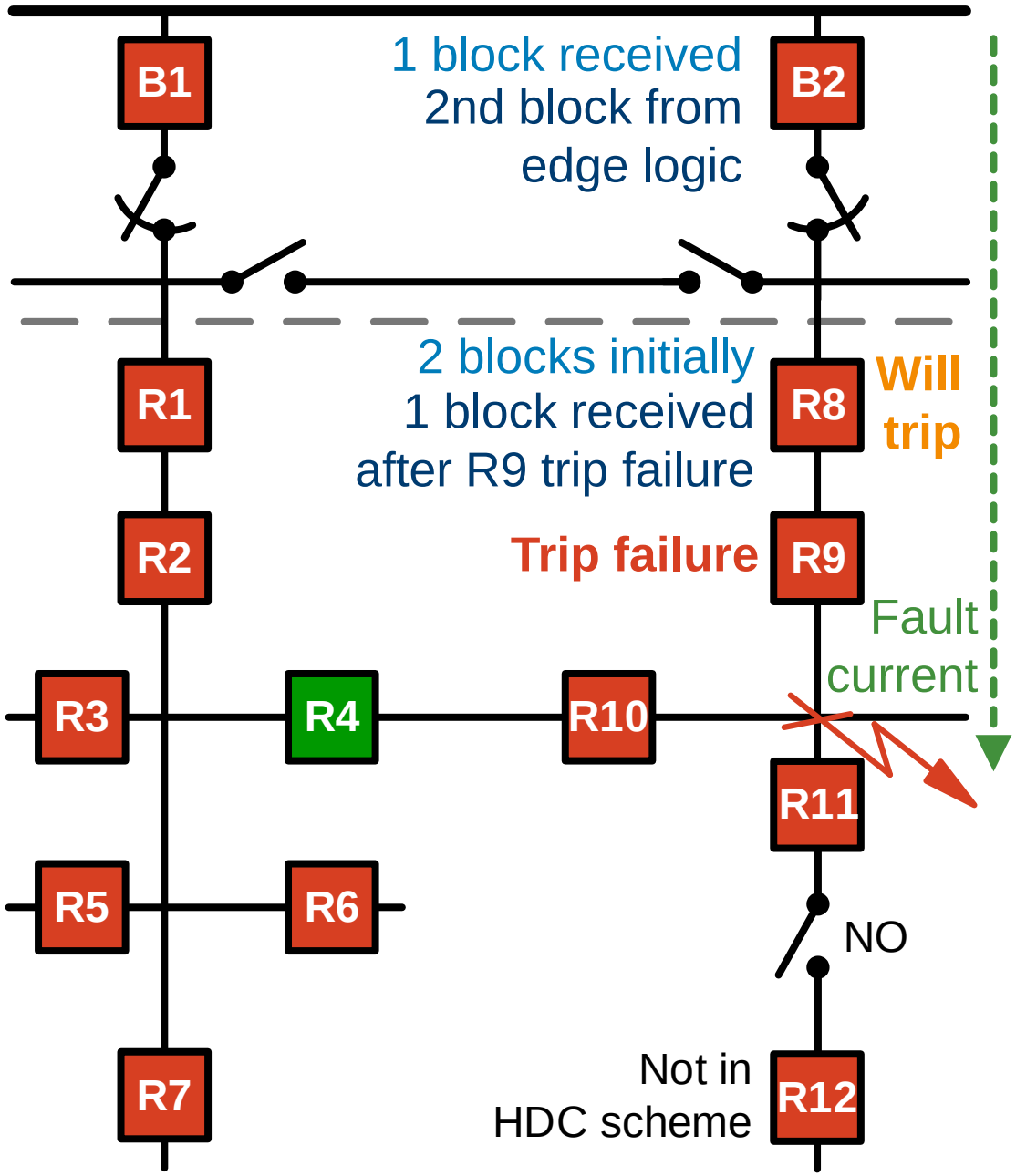

Communications failure fault

Electrically adjacent devices revert to fast and slow curve time-delay coordination

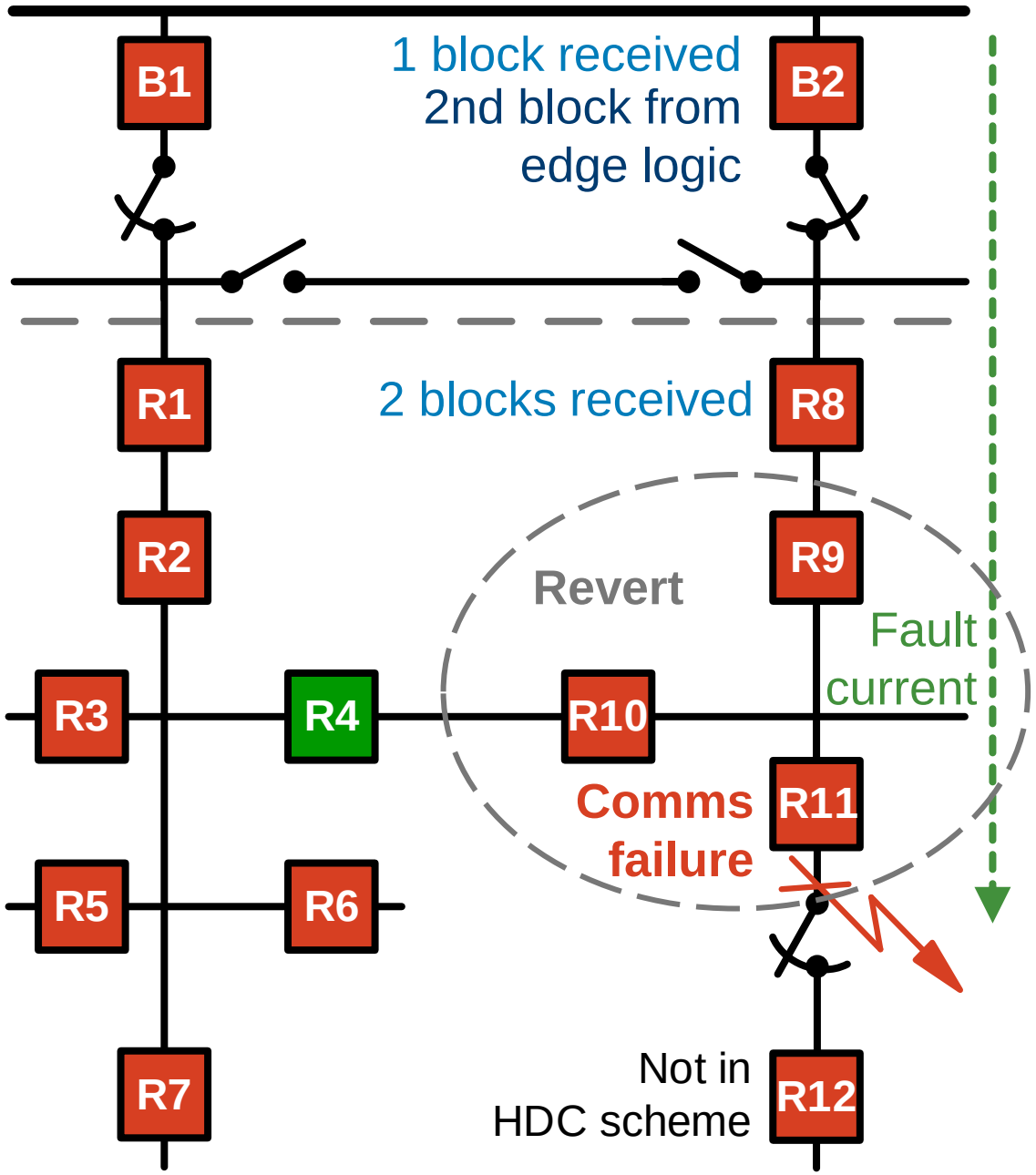

Communications test

Test mode for block publication and subscriptions

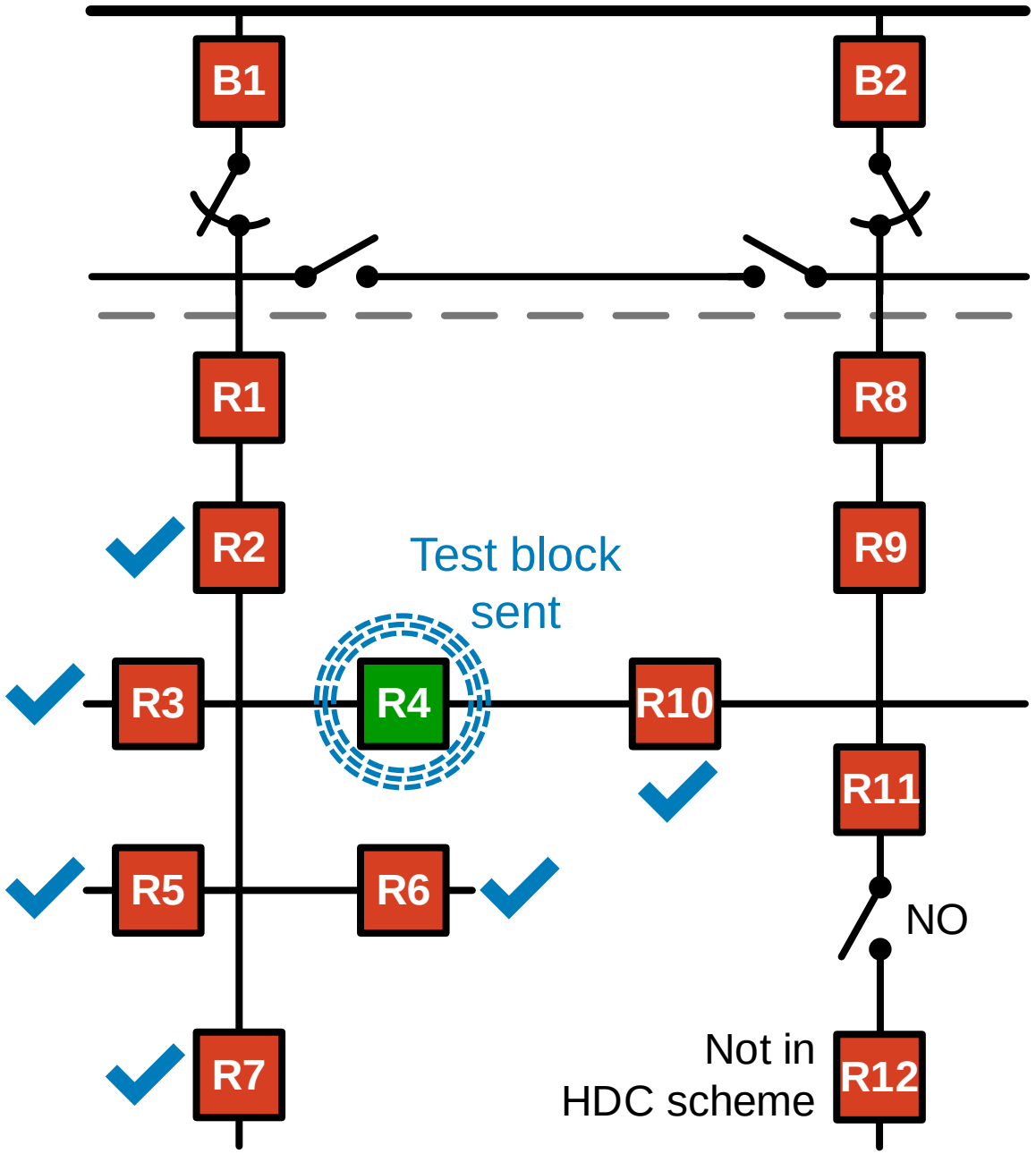

Feeder outage after HDC

9/25/18

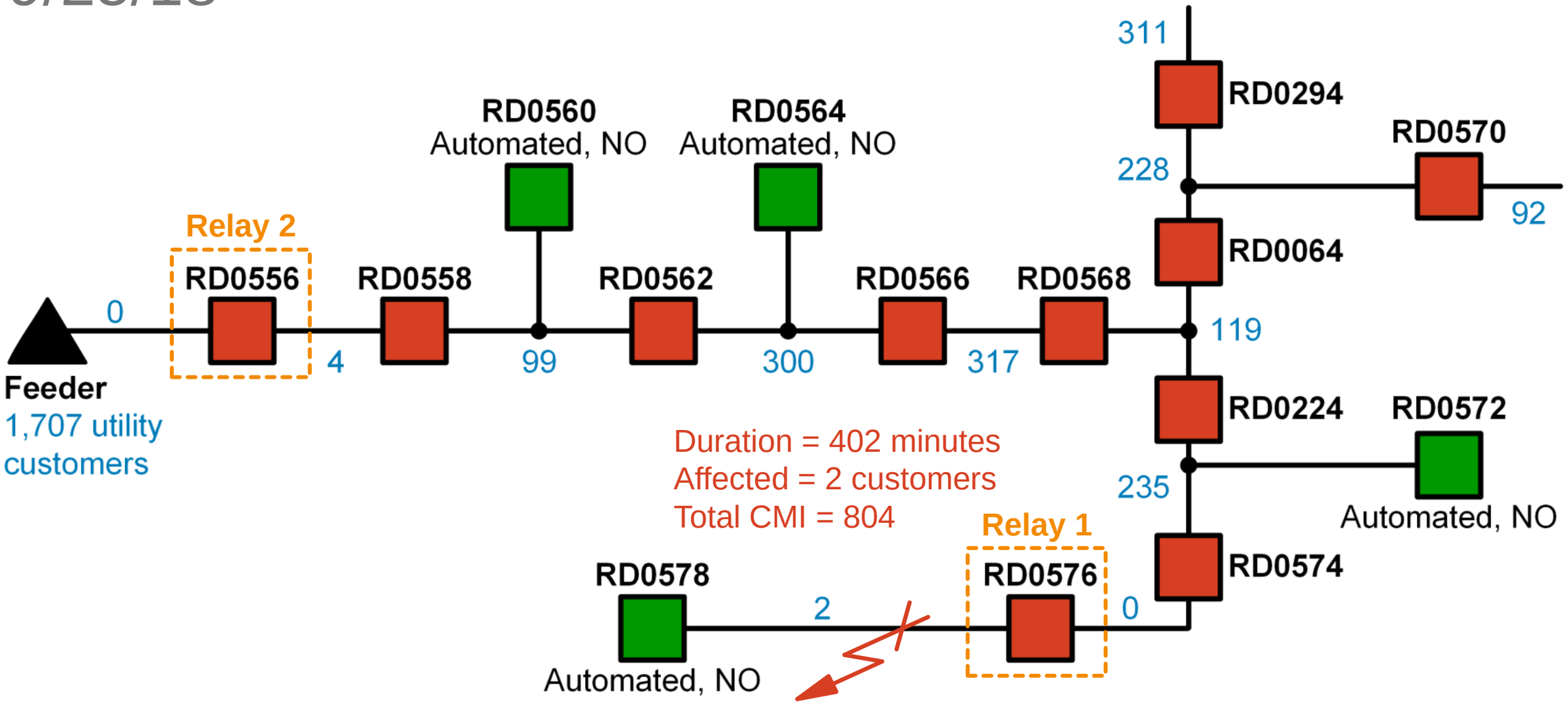

HDC operation

9/25/18

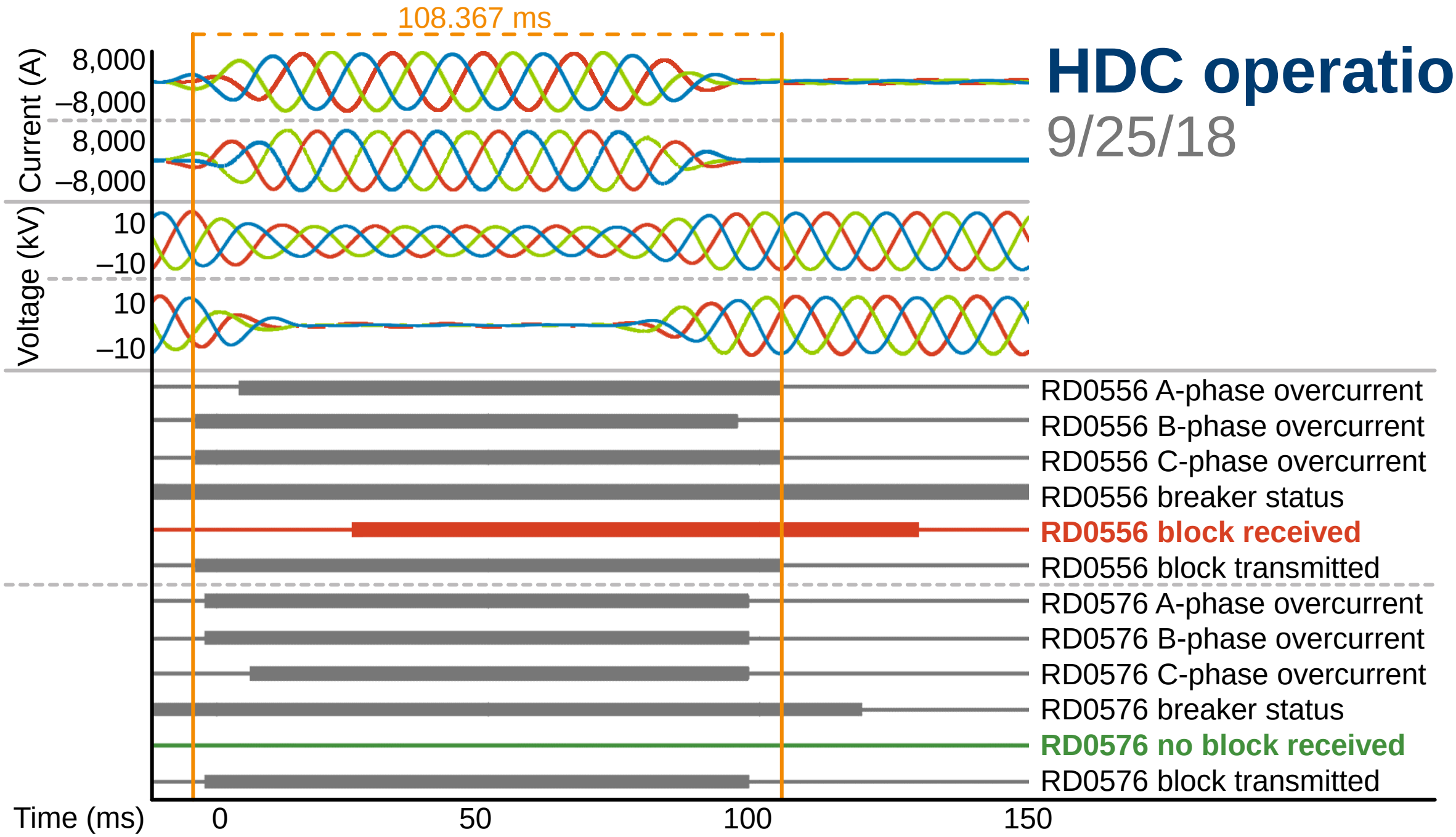

Summary

Is simple in principle

Is adaptable to most feeder configurations or reconfigurations

- No settings changes required
- No modifications to communications required

Has inherent directionality

- Using fault current detection
- Using blocking signals

Summary

High-speed protection extends to end of feeder regardless of fault current magnitude

Scheme is generally agnostic to the recloser

Phase 2 of project adds miscoordination logic to mitigate loop conditions and other atypical configurations

Questions?