Case Studies in Analyzing Transformer Installation Faults – Part 1

By Sudipta Maiti, Superintending Engineer (Electrical),

Central Relay and Instrument Testing Laboratory, Damodar Valley Corporation, India.

INTRODUCTION: This paper presents 7(Seven) cases of mal-operation of Transformer Differential & Restricted Earth Fault Protection at various powerhouses of Damodar Valley Corporation, a power utility dealing in power generation, and transmission in Eastern India. It shares the experiences gained while analyzing these mis-operations of protection system with the objective of reducing maltrippings due to commissioning errors, setting errors, scheme errors etc. Each case study starts with a short abstract highlighting the main aspect of the problem followed by a brief history of the event, system SLD with operated relay targets, in depth study of relay disturbance records [DR] & event records [ER] picked up, root cause analysis of the event and finally lessons learnt and remedial actions taken. Sharing our experiences can help others avoid similar problems and improve the quality and reliability of electric power.

COMMON USED ACRONYMS IN THIS PAPER:

1. REF – Restricted Earth Fault Protection.
2. 64R HV / LV – REF Protection of HV / LV Side.
3. 87T – Transformer Differential Protection.
4. 50N – Standby E/F.
5. R_S – Stabilizing Resistance used in series with High Impedance REF relay coil.
6. V_S – Saturation Voltage developed across R_S and Relay Coil during CT saturation conditions.
7. KPV / V_K – Knee Point Voltage of CT.
8. PCT – Phase CT. NCT – Neutral Side CT.
9. R_{CT} – CT Secondary Resistance.
10. R_L – CT cable Lead Resistance.

CASE STUDY # 1: WRONG STABILIZING RESISTANCE CALCULATION IN HIGH IMPEDANCE REF SCHEME DUE TO WRONG FAULT CURRENT ASSUMPTION

ABSTRACT: *The events in this case study took place within a year of commissioning of Station Transformer # 1 & 2 at a newly commissioned Generating Station of 2 * 500MW Units. The case study analyses the reason of mal-tripping of High Impedance REF Protection during out-zone faults due to wrong maximum through fault current assumptions in REF Stabilizing Resistance calculations. It teaches us to use the maximum of 1LG and 3LG fault current as the through fault current for calculation of R_S.*

INVOLVED POWER SYSTEM DESCRIPTION AND PROTECTION SINGLE LINE DIAGRAM:

The power system of the affected area consisted of one 500MW Generating Unit supplying through Generator Transformer (3*250MVA, 400/21KV Ynd11) to 400KV bus with two Unit Transformers (45MVA, Dyn11, 21/11.5KV) and one Station Transformer [ST] (90MVA, Ynyn0yn0, 400/11.5/11.5KV) to supply the unit auxiliary boards. The ST main protection consists of 87T & 64R of for all the three windings, Impedance protection and O/C and E/F protection as Back Up.

The High Impedance LV REF for both LV windings had been implemented in two Definite Time Single Phase E/F elements. The REF protection of LV side was implemented as High Impedance REF taking CT inputs from LV Bushing CTs and Neutral CT of the transformer. These 4(four) CTs were shorted at transformer marshalling kiosk and only the summation current would operate a Non Directional E/F element (inbuilt in ST Differential relay) as shown in Fig 1.2. In series with the relay element would be a stabilizing resistor of suitable value to prevent relay operation in cases of CT saturation during out zone faults.

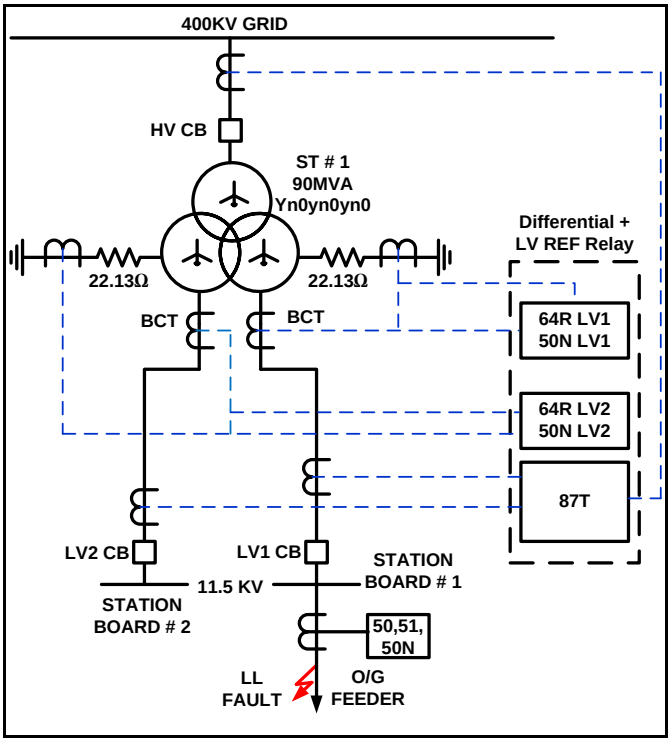

Fig 1.1: Protection One Line Diagram of ST LV REF Protection

DESCRIPTION OF FAULT AND DATA FROM DR:

It so happened that during a fault in downstream LV board (shown in Fig. 1.1) ST tripped through LV REF protection along with tripping of feeder relay by Hi Set Stage of O/C Protection. **The investigation point was why had LV REF operated and overtripped the ST when the fault was correctly segregated by downstream instantaneous O/C Prot.**

DR data of both LV REF relay and downstream 11KV feeder protection revealed that it was a LL fault with around 19kA fault current. As the LV REF relay and differential relay were same the phase currents could be checked during the REF operation. DR revealed the same 19kA current in both the faulted phases at 180° apart and it was around 1 cycle after start of this fault that the REF trip command had been issued.

The REF current sensed by the single phase DT element was quite high pointing to CT saturation of the bushing CTs from which the REF protection was operating. The Differential CTs showed no signs of saturation. So it could be concluded that REF protection of ST LV Side had over-tripped during the 11KV board fault.

ANALYSIS OF FAULT

As it was clear that REF relay had performed correctly (tripping instantaneously with the available current), investigation was concentrated on value of Stabilizing Resistance (R_S) value calculation. It was found that the implemented R_S value was only 50Ω.

On enquiring the setting calculation basis sent by the OEM, it was found that the maximum fault current considered for REF R_S calculation was only 300A which was the maximum ground current in the 11KV system as it was grounded with 22.13Ω resistance.

As this time, the fault was LL with a current of 19kA approx. and assuming one of the phase CTs had saturated, the voltage developed across R_S would be much greater than the voltage on which R_S calculation had been based leading to mal-operation of the REF protection. **It was calculated that the value of R_S needed to make the REF element insensitive to through faults in case of CT saturation during LL faults was of the order of about 1450Ω instead of 50Ω as implemented**.

The revised theoretical calculations for R_S has been given below:

Sl. No	Parameter	Revised Calculations
A.	CTR of REF CTs	2500/1
B.	Max Through Fault Current [If]	= MVA/(1.732 * %Z * KV) =90*1000/(1.732*.19*11.5) = 23,781A.
C.	If in Sec Amps	= 23781/2500 = 9.512A
D.	CT Sec Res [R_{CT}]	15Ω
E.	Lead Length	50m [CT Sec to Transformer Marshalling Kiosk]
F.	CT cable Resistance	7.41Ω/Km [2.5sq mm double run cable.
G.	R_L [Lead Res]	=(7.41/2)*(50/1000) =0.18525 Ω [One Way]
H.	V_S [Sec Voltage developed]	V_S=If*[R_{CT}+2*R_L] =9.512*15.3705 = 146.21V
I.	REF P/U	0.1A Secondary
J.	Relay Burden at above Setting	10 Ω [Taken from relay datasheet]
K.	Min R_S	= (V_S / I_{PU}) – Relay Burden = (146.21/0.1) – 10 = 1452Ω
L.	Actual R_S set	1450Ω
M.	Ie [CT Nameplate]	=30mA at V_K/2 where V_K=100V

On searching for the reason as to why a PS class had saturated during this fault it was found that the defined Knee Point Voltage [V_K or KPV] for this CT was only 100Volts which was too low. The minimum V_K of CT core to be used in this application should have been twice the maximum voltage developed across the stabilizing resistance in case of full saturation of one phase CT during a 3LG fault = 2*146.21V = 292.42V ≈ 300V. **It was clear that this was a design problem and the OEM designers had later acknowledged that the CT KPV calculations had been based on maximum theoretical 1LG fault current of 300A.**

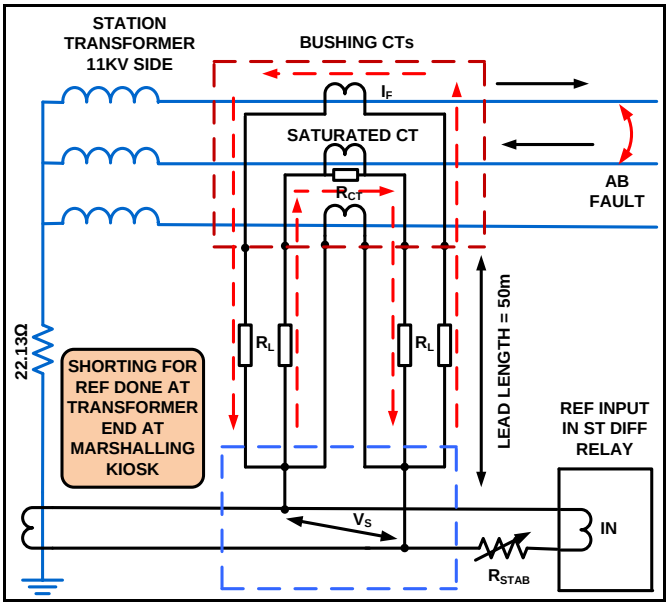

Fig 1.2: Path of Fault Current during CT Saturation for LL Fault [Red dotted line]

A lower V_K of CT also meant that high magnetizing current would be drawn by the CTs at the stabilizing voltage (V_S) which would mean much higher primary

operating current for the scheme thereby decreasing the sensitivity. In fact in this example the magnetizing current drawn by the CTs was unknown as the V_S was higher than the knee point voltage.

REMEDIAL MEASURES TAKEN:

As the KPV of Bushing CT was only 100V and a 2000Ω was not readily available at site, it was decided to convert the High Impedance(Z) REF scheme to a Low Impedance Scheme as we had all the phase currents already coming in the Differential Relay and the said differential relay had inbuilt Low Z REF protection. The scheme had been performing very well since and has never malfunctioned till date and the same was later implemented in all ST LV REFs at that generating station.

LESSONS LEARNT

Any High Impedance REF stabilizing resistance calculation should take into consideration CT saturation during the severest fault conditions i.e. maximum phase fault current among 3LG, 2LG, 1LG and LL faults. Generally Phase Current for 3LG fault or Neutral Current for 1LG faults are the 2 severest currents. So we must take the maximum of the two.

The KPV calculations of CTs used in High Z REF Protection must also consider maximum fault current as discussed above. In addition they should consider the maximum lead resistance which shall be our main lesson learnt in the next case study.

CASE STUDY # 2: WRONG STABILIZING RESISTANCE CALCULATION DUE TO WRONG LEAD LENGTH ASSUMPTION

ABSTRACT: *This case study is about tripping of two Station Transformers (400/11/11KV) through mis-operation of High Impedance REF protection causing blackout of two 500MW units. It gives an in depth analysis of the cause of tripping of two STs through LV REF during a 11KV board fault (out zone fault) due to wrong stabilizing resistance calculations caused by wrong CT cable lead length assumptions. This case study teaches us the considerations for choosing correct lead length of CT cable during stabilizing resistance calculations for High Impedance REF Schemes during 3LG and 1LG faults.*

BRIEF HISTORY: This event occurred 2-3 years after the commissioning of 400/11/11 KV Station Transformer at another 2*500MW powerhouse installation. There was a LL fault in downstream 11KV boards and ST had over-tripped through ST LV REF. During that exigency, in order to save the generating unit from tripping due to drive failures, operation personnel immediately acted to charge this faulty board from another ST without first investigating the source of downstream fault. As soon as this board was charged from another ST the second ST also tripped through LV REF. Loss of both STs led to tripping of both the generating units resulting in generation loss of approx. 1000MW.

DESCRIPTION OF THE PROTECTION SYSTEM:

The power system of the affected area is exactly similar to that of Case Study # 1 and hence Figure No. 1.1 can be referred to understand the basic protection system in operation. But as the solution to this problem has its roots to the commissioning period a brief story of the events that occurred during that time has been given.

The original Scheme for LV REF protection was exactly similar to the scheme used in Case Study # 1 i.e. the Phase CTs and Neutral CT would be shorted at Transformer Marshalling Kiosk (MK) and the shorted current wound flow through the Stabilizing Resistor and operate the REF relay element (depicted in Fig. 2.1).

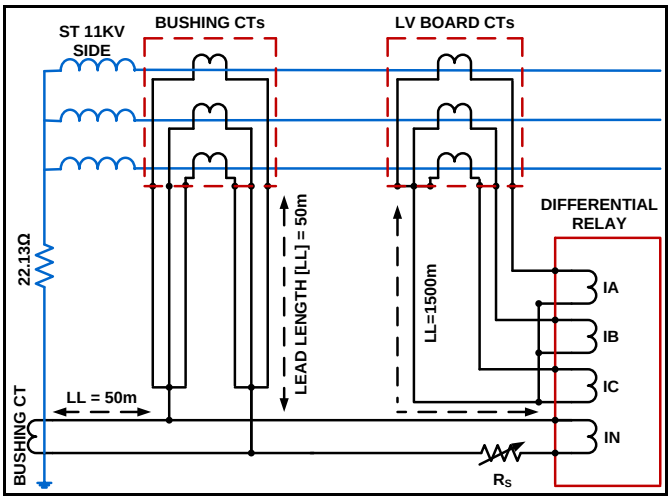

Fig. 2.1: Original Protection Scheme: REF from Bushing CT & Differential from LV Board CT

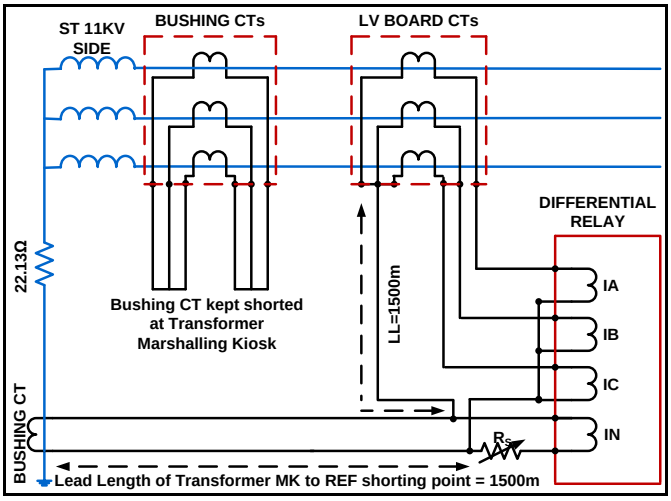

Fig. 2.2: Modified Protection Scheme: REF & Differential Protection both from LV Board CT

But during testing of the bushing CTs the Knee Point Voltages [KPV] of the Bushing CTs were found to be around 100V and as discussed in the previous case study were not implemented in High Z REF scheme in fear of saturation problems. **Instead the scheme was implemented by shorting the LV neutral CT with the 3 phase CTs used for Differential Protection (which had defined KPV at 1000V) after the relay at the panel end** (as depicted in Fig 2.2).

But the stabilizing resistance value was not changed and it remained at its previous value although this time maximum through fault current used was that during 3LG faults (23500A) and the installed R_S was 1450Ω (as learnt from Case Study # 1).

ANALYSIS OF THE EVENT

DRs revealed that during both times though the ST board incomer had recorded the fault, the ST had over-tripped instantaneously thereby not giving the incomer chance to trip earlier.

The study of DRs of both ST Differential relay and LV board incomer relay revealed a LL fault with fault current (If) ≈ 23kA for both faults [ST 1 & ST 2].

The Stabilizing Resistance (R_S) was set at 1450Ω which certified that the mistake of the previous case study had not been repeated here. So initially cause of REF mis-operation due to lower R_S values was not thought of. Relay implemented settings were checked and found O.K. As both STs had tripped in a similar manner both relays could not have malfunctioned. So the only common point was the setting calculation basis.

A revisit of the setting basis revealed that the lead resistance of the CT cable was calculated on the basis of REF CT shorting point in transformer marshalling kiosk. This lead length was only 50m. **But now actually the CTs had been shorted at the relay panel which meant that the lead length had increased to at least 1500m (new distance between LV board and shorting point with Neutral CT). This extra cable resistance had increased voltage across R_S during the board fault causing mal-operation of REF protection for both STs.**

The revised calculation below shows that in the extant case due to much higher CT cable resistance the saturation voltage developed was higher than the value used for R_S calculations causing the REF current to rise above the Pick Up value.

In the revised calculations another additional precaution was taken i.e. instead of using 19% percentage impedance for determining maximum through fault current, 90% of 19% was used as %Z as the tap variation of this transformer was ± 10%.

Sl. No	Parameter	Revised Calculations
A.	CTR of REF CTs	2500/1
B.	Max Through Fault Current [If]	= 90000/(1.732*.19*.9*11.5) = 26,424A
C.	If in Sec Amps	= 26424/2500 = 10.5696A
D.	CT Sec Res [R_{CT}]	13.25Ω
E.	Lead Length	1500m
F.	Per Km Resistance of CT cable	7.41Ω/Km
G.	R_L [Lead Res] of one side cable	R_L = (7.41/2)*(1.5) = 5.55Ω
H.	V_S [Sec Voltage across R_S]	V_S = If*[R_{CT} + R_L] = 10.5696 * (13.25 + 5.55)= 198.79V
I.	V_K of CT	1000V i.e. > 2*199V thus O.K.
J.	REF P/U	0.1A Sec
K.	Min R_S	= (198.79/0.1)= 1987Ω
L.	Actual R_S set	2000 Ω

LEAD LENGTH FOR V_S CALCULATION:

It may be noted in the previous calculations that the CT cable lead length has been taken as only 1500m which is the one way distance from CT location to shorting point located at Switchyard control room. **Here 2*R_L need not be taken as although the fault current traverses two CT cables in case of saturation during LL faults (Fig. 2.4) but the Voltage V_S is created due to current path of the saturated CT only**.

To explain more clearly we take 3 fault scenarios:

Scenario # 1: 1LG fault, Neutral CT saturates:

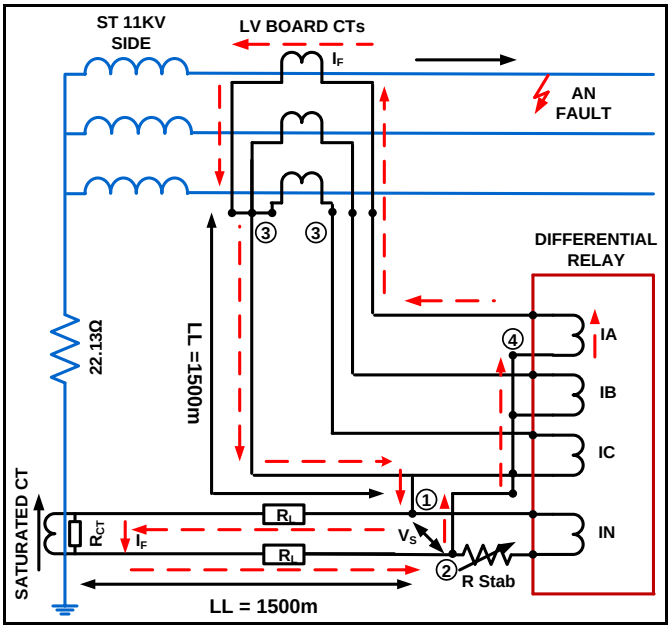

Fig 2.3: Fault Current path in LG fault with NCT saturated.

This is the most common fault scenario where a Phase or Neutral CT saturates fully while all other CTs behave

normally. The fault current path during NCT saturation is depicted in Fig No. 2.3.

The voltage created between terminals 1 & 2 is a result of the voltage drop due to the fault current flowing from terminal 1 to the saturated CT (Neutral CT in this case) and back to terminal 2. Thus $V_S = If*(R_{CT} + 2*R_L)$ which is the formula for stabilizing voltage most commonly known.

In the present case study as the E/F current is limited to only 300A due to impedance grounding the V_S developed using If = 0.12*(13.25 + 5.55*2) = 2.922V which is much lesser than the calculated V_S during LL faults. Thus R_S in this case study was calculated based on CT saturation during LL faults.

Scenario # 2: 1LG fault, Phase CT saturates:

If the Phase CT saturates instead of the NCT, the V_S derivation remains the same only the fault current path reverses. Thus Fig. 2.3 is applicable for this scenario too, only with reversed currents and the R_{CT} to be included shall be that of the Phase CT.

Scenario 3: 3LG /LL fault, Phase CT saturates:

We assume an AB fault with B Phase CT saturating with the fault current path shown in Fig 2.4. As the fault current created by A Phase CT flows through the saturated CT (B Phase CT) it need not traverse the CT neutral cable. Hence terminal no. 1 and 3 are at the same potential. Terminal 2 & 4 are at same potential as they are actually the same point. The voltage at terminal 4 (same as Terminal 2) w.r.t terminal 3 is a result of the voltage drop created by the fault current flowing through the saturated CT till relay coil.

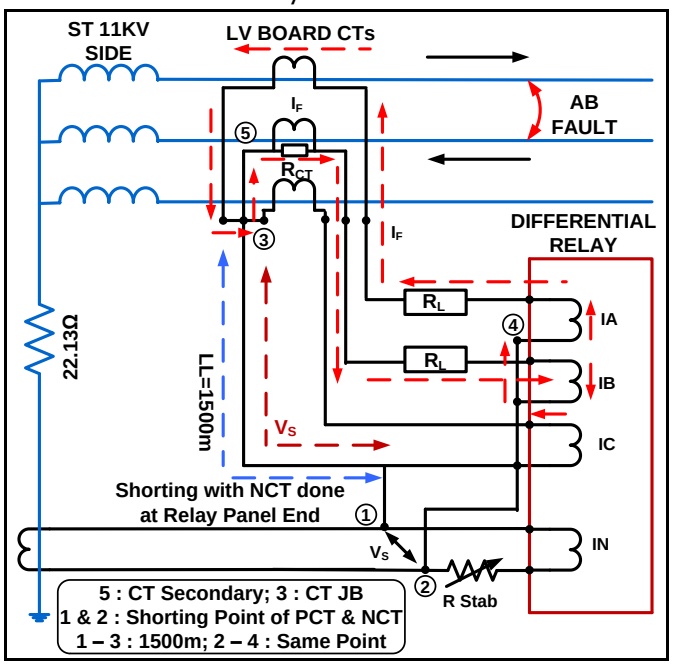

Fig 2.4: Fault Current path during LL fault with PCT saturated

Neglecting relay current coil resistance, (which is very small for numerical relays) the voltage at terminal 4 w.r.t terminal 3 is $If*R_L$ and not $If*2R_L$. So the voltage developed between Terminal 4 & 3 = Voltage developed between 2 & 1 (1 & 3 are at same potential) = $If*(R_{CT} + R_L)$.

Had the CT neutral point formation taken place at the panel end instead of at CT JB i.e. 6 wires instead of 4 would have come to the panel end (as shown in Fig 2.5) then the fault current had to traverse twice the lead resistance and VS calculation would be the conventional $V_S = If*(R_{CT} + 2*R_L)$ during LL or 3LG faults. But creating CT neutral at relay panel end is generally never a practice and in almost all designs the CT neutral is formed at CT JB or transformer marshalling kiosk. Thus such designs have not been considered further.

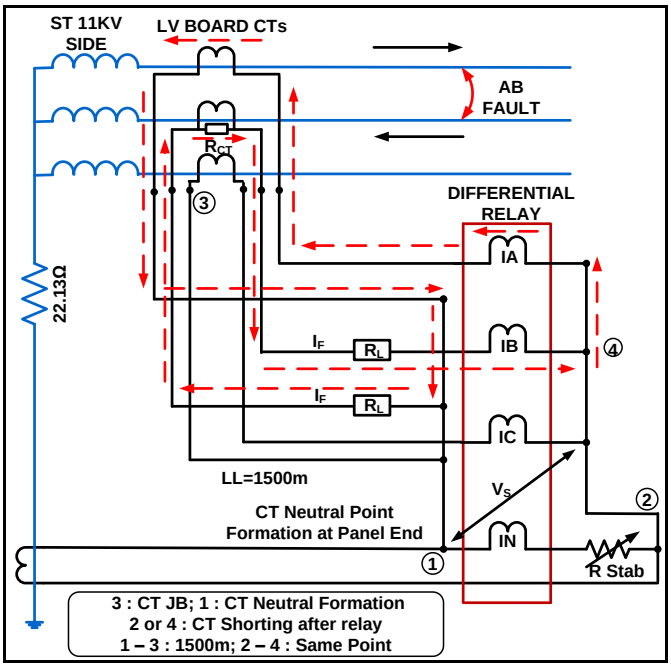

Fig 2.5: Fault Current Path during CT saturation during LL fault if CT Neutral formation is done at Panel End

SUMMARY OF V_S CALCULATION FOR ALL FAULT TYPES:

We take a generalized situation where the R_{CT} of Phase [R_{CTPh}] and Neutral Side [R_{CTN}] are different and all the CT cable resistances i.e. from CT Sec to CT Starpoint and CT Sec to NCT connecting point of Phase CTs and NCT to Phase CT shorting point are different and find the stabilizing voltage (V_S) for each cases.

Scenario 1: 1LG fault, NCT saturates:
$V_S = If * (R_{CTN} + 2*C)$ [If=1LG current]
Scenario 2: 1LG fault, Phase CT saturates:
$V_S = If * (R_{CTPh} + 2*(A + B))$ [If=1LG current]
Scenario 3: 3LG /LL fault, Phase CT saturates:
$V_S = If * (R_{CTPh} + 2*A + B)$ [If=3LG / LL current]

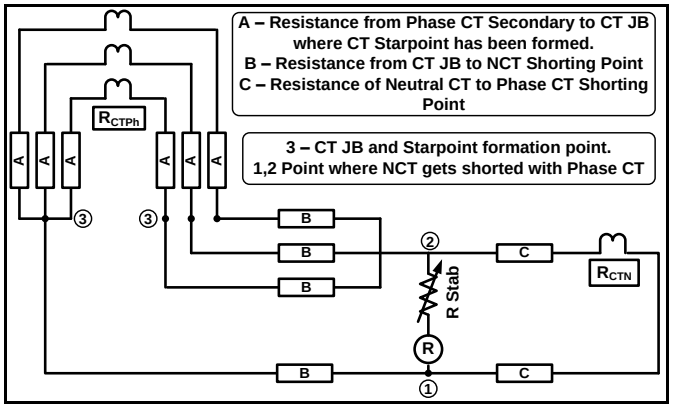

Fig 2.6: Generalized V_S calculation

The maximum value of V_S among these 3 scenarios should be taken for Stabilizing Resistance calculations. This generalized derivation should suffice for all varying field scenarios with varying R_{CT} and varying lead lengths. If the R_{CT} across phases is also varying take the maximum R_{CT} for calculations.

In cases such as high impedance busbar protection (where number of CTs in parallel may be much more) or Auto Transformer High Impedance REF protection (3 HV CTs, 3 LV CTs and 1 Neutral CT paralleled) where CTs from multiple physical locations are paralleled the general rule for V_S determination remains the same: the furthest located CT (i.e. highest lead length) and the CT with highest CT secondary resistance and the maximum fault current are the considerations. If every CT has different loop length and different CT resistance then the V_S calculation needs to be repeated for every CT and the maximum used for RS calculation. But such complicated scenarios rarely occur in reality which needs so much rigorous calculations:

REMEDIAL MEASURES TAKEN AND LESSONS LEARNT:

The REF Stabilizing Resistance value was increased to 2000Ω which was readily available here. With the new R_S value no mal-operation have been reported till date.

The CT cable resistance is an important parameter in the V_S calculation. It should be properly chosen after understanding the path of fault current during saturation of Phase / Neutral CTs during various types of fault.

CASE STUDY # 3: DIFFERENTIAL RELAY MALOPERATION DUE TO WRONG GROUND CT POLARITY IN Ynd1 TRANSFORMER

ABSTRACT: *This case study is about mal-operation of a transformer differential relay during an external system fault. The reason for the mal-tripping was wrong neutral CT polarity connection which was creating wrong zero-sequence correction during external earth faults thereby excess tripping the differential protection. The case study is illustrated with disturbance record diagrams of differential protection operation during faulty CT polarity conditions and also during correct CT polarity connections. The theoretical phasor relationship between faulted phase and ground current during such external earth faults with correct CT polarity connections have been discussed with diagrams. Finally lessons learnt and possible remedial measures have been touched upon.*

DESCRIPTION OF POWER SYSTEM AND ITS PROTECTION SYSTEM

The power system relevant to the case study consists of one generator feeding one line via GT although there were multiple generators and lines on the bus. The GT had over tripped in Differential Protection along with Line Distance protection Zone 1 (both instantaneous).

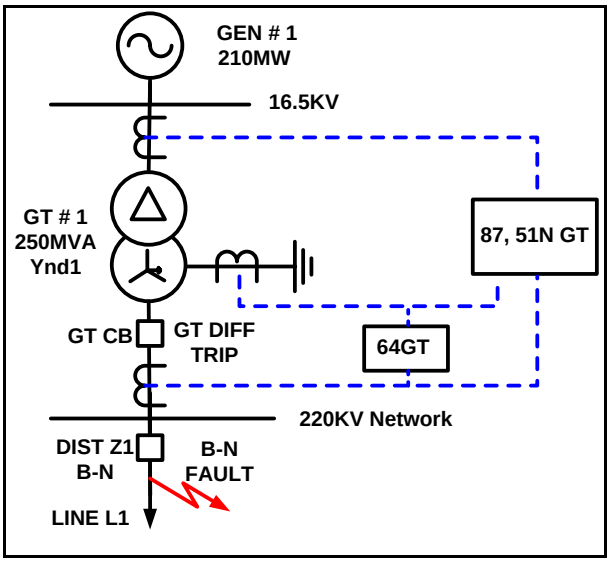

Fig No. 3.1: Protection SLD with fault targets

ANALYSIS OF DR FILE AND EVENT:

As differential protection (87) had simultaneously operated along with Zone 1 tripping of line and the faulted phase B-N [ABC Phase Nomenclature] was matching in DR of 87 relay too there was little doubt that the said tripping was due to external fault. The question now was why did it maloperate?

The most common vulnerable areas in settings viz. mentioning correct Vector Group numeral, CT & PT ratios, CT starpoint towards protected object, Transformer MVA, KV levels were checked and found O.K. It was seen that the zero sequence ($3I_0$) correction had been correctly kept 'ON' the star grounded side and was configured to use the measured mode instead of calculated mode i.e. 1/3rd of physically measured ground CT current would be subtracted from the Phase currents on the Star side.

DR revealed that the B Phase GT primary current during this external B-N fault as it should be and there was equivalent rise in ground CT current too. The only peculiar thing was that the B Phase current was in same phase with the ground current for this fault in DR.

THEORETICAL PHASOR RELATIONSHIP BETWEEN FAULTED PHASE AND GROUND CURRENTS FOR AN EXTERNAL GROUND FAULT [Fig 3.3]:

We consider an Ynd1 transformer having voltage ratio √3:1 (so that turns ratio is 1:1) and CT Ratio on both sides as 1:1 (so that both primary and secondary currents are same). The Phase CT Shorting Direction is "Towards Transformer" or towards "Protected Object" and the Neutral CT Ground Side is "Terminal R7" (Fig. 3.2). In the relay iX1 = Measured HV Ground Current, R1-R6 = HV side CT inputs & Q1-Q6 = LV Side CT inputs.

We apply an A-N fault on HV side beyond protection CTs and consider 1L0° primary current flowing towards the fault. This creates IL1HV (HV Side A Phase current) = 1L180° in the relay. The 1L0° primary fault current rises from GT Neutral (considering no other ground sources connected to bus) and creates 1L0° at terminals R7 w.r.t. R8.

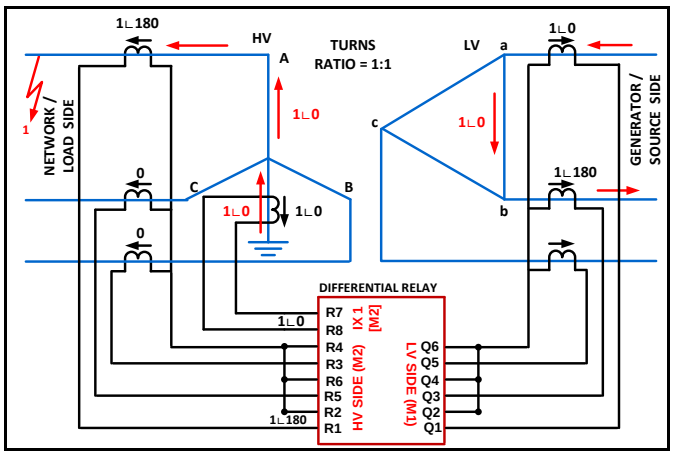

Fig No. 3.2: Phase angle of currents measured by relay for external faults [Red Currents: Primary]

CONCLUSION: **For an external ground fault if all CTs are connected with proper polarity the relay faulted phase coil current will be of opposite polarity to that of measured ground CT current.** The phasor directions seen by a particular make and model relay may vary and needs to be verified from relay instruction manual. This discussion is valid for Siemens make 7UT613 relay which was the installed relay involved in this event.

Thus theoretically iX1 and iB-M2 should have opposite phasor relationship for the zero sequence compensation to be correctly functioning in the relay. Possible methods of reversing the Ground CT polarity in software was checked and it was found that no reversal has been done in software. On physical inspecting and tracing the ground side and transformer side neutral CT secondary wire it was found to be reversed.

It is known that in all Siemens 7UT Siprotec relays the software calculated zero sequence current (3I0) is always shown opposite to actual the vector addition of the three phase currents at that location. **So the thumb rule to understand correct polarity of ground CT during zero sequence stability tests is that 3I0-M2 (here M2 is Star HV Side) should be cophasal with iX1 (Ground Current – HV Side).**

It would be worth mentioning that another DR of correct relay operation i.e. no trip issued during similar external Earth Fault in another field formation of the same utility was fortunately available in some old archived DRs. The DR depicted cophasal 3I0-M2 and iX1 during external earth fault and differential protection had restrained correctly during the event.

Figure 3.3: Phasor of iX1 And 3I0-M2 and Faulted Phase Currents during external Earth Fault

WRONG ground polarity connection	**CORRECT** ground polarity connection
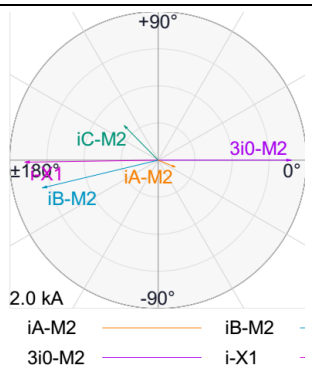	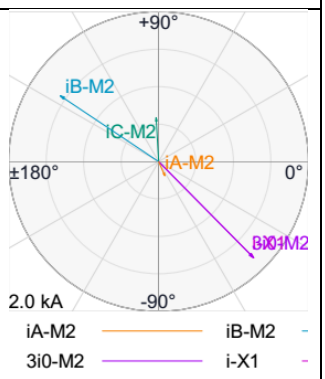
iX1 and 3I0-M2 out of phase and faulted phase (iB-M2) in phase with iX1;	iX1 and 3I0-M2 in phase and faulted phase (iB-M2) out of phase with iX1

The phasor relationship of iX1, 3I0-M2 and faulted phase current as seen by Siemens 7UT Differential relay during external fault with wrong neutral CT connection vis. a vis. the correct one have been shown in Fig 3.3. This DR reconfirmed the fact that the root cause analysis of the event was correct.

LESSONS LEARNT:

As Transformer REF relay was separate in this case and the ground side CT was only used for Standby Earth Fault Protection which is not polarity dependent, the polarity connection of this CT was not checked during commissioning. But in Zero Sequence Compensation of modern transformer differential relays the polarity of this

CT namely Ground side and Transformer side has to be correctly mentioned in settings for correct compensation.

DRs picked up during healthy operation of relays needs to be saved and archived so that they can be compared with during suspected relay mis-operations.

CASE STUDY # 4: MALOPERATION OF DIFFERENTIAL RELAY DURING BREAKER POLE SCATTERING

ABSTRACT: *This case study is exactly similar as the Case # 3 only difference being in the mechanism of external ground fault creation. In this case a transformer differential relay had maloperated during difference in opening of CB poles [CB Pole Scatter] during generator de-synchronisation during some mechanical tripping. Here also the reason of maltripping was wrong neutral CT polarity connection which was creating wrong zero-sequence correction during external earth faults thereby excess tripping the differential protection. As the root cause analysis of the event was exactly similar to Case # 3 the analysis part has been just touched upon. This case study has been included just to show that single pole open conditions also create ground currents in Star Grounded transformers and differential protection zero sequence correction comes into effect during this brief time period too.*

BRIEF HISTORY:

In March 2010 one 250MW Generator tripped from a primary reason of flame failure and simultaneously the generator electrical protection tripped through GT Differential Relay. The question was why Differential relay operated during de-synchronisation?

ANALYSIS OF EVENT:

DR waveforms revealed that when the GT CB had tripped through 'flame failure' the current in the B phase [IL2] started falling down before the other phase currents because of CB Pole scattering. In this case the difference between B pole opening and other pole opening was about one cycle.

As one pole opens earlier some current flows through GT neutral as during one pole open conditions. This is sensed as i-X1 in DR. Now this condition is similar to an out-of-zone Earth Fault condition with E/F current flowing towards ground from transformer neutral.

The rest of the analysis follows similar lines with the previous case and hence has been just touched upon. As the Neutral CT polarity was reversed this ground current did not get compensated from the phase currents leading to differential mal-operation.

THEORETICAL PHASOR RELATION BETWEEN FAULTED PHASE AND GROUND CURRENTS FOR ONE POLE OPEN CONDITIONS ON HV SIDE:

We again consider similar Ynd1 transformer having voltage ratio √3:1 and CT Ratio on both sides as 1:1. The Phase CT Shorting Direction is "Towards Transformer" and the Neutral CT Ground Side is "Terminal R7".

1. The abnormal situation is that suddenly while carrying balanced load the HV side B pole (ABC sequence) gets opened. As LV CB has not opened and the load side is also star grounded there shall be current flow between the source side and load side neutrals.

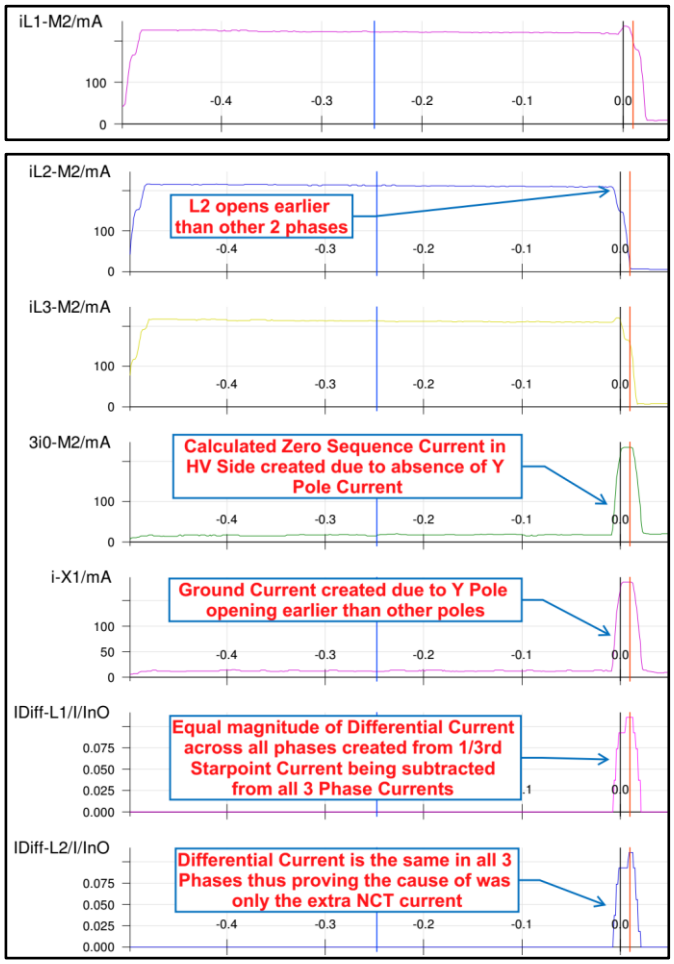

Fig. 4.1 DR of Event showing earlier opening of Y Pole

2. **Pre and Post Fault Currents:** IL1HV = 1L0°; IL2HV = 1L240°; IL3HV = 1L120° at primary level which creates IL1HV = 1L180°; IL2HV = 1L60°; IL3HV = 1L300° at secondary level.
3. After B pole opens IL2HV becomes zero and iX1 = 1L240° from transformer neutral towards ground. The 1L240° primary iX1 creates 1L60° at terminal Q7 w.r.t. Q8.

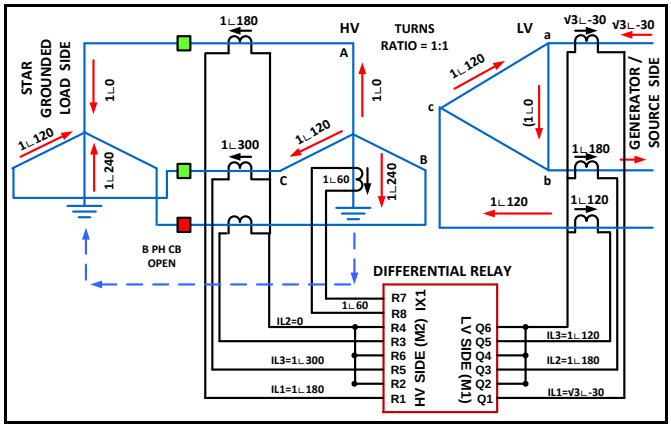

Fig. No. 4.2: Theoretical Current Phase Angle during Y Pole OPEN conditions in GT HV Side.

4. Currents at relay terminals: IL1HV=1L 180°; IL2HV = 0; IL3HV = 1L300° and iX1 = 1L60°. Thus 3I0-M2 = √3L300° (√3L60° i.e co-phasal with iX1 for Siemens 7UT). Taking IL1HV as reference the currents are re-written as IL1HV = 1L0°; IL3HV = 1L120° and iX1 = 1L240°.
5. **CONCLUSION**: **The ground current during one pole open conditions is of opposite polarity in the relay to that of pre-fault current of the opened pole.**

HV Side Phasors taking IL1HV as reference	LV Side Phasors taking IL1HV as reference
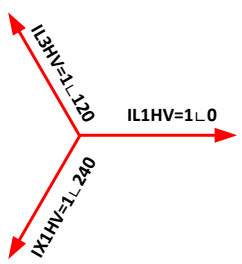	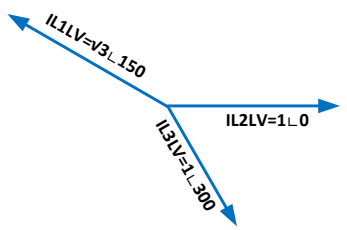
Combined HV & LV Phasors: IL1HV reference	**Actual Relay DR Phasors: M2-HV; M1-LV Side.**
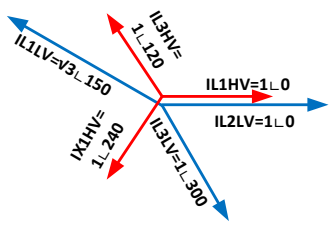	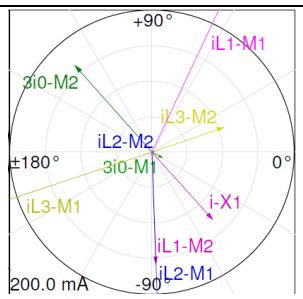

6. Note that IL3HV and IL3LV are 180° apart and IL1LV leads IL1HV by 150° in the theoretical phasor. The actual DR phasor also confirms all these derivations.
7. We see in the DR that iX1 as measured by relay is opposite to the pre fault B pole current thus proving that the ground CT polarity has been reversed. On tracing the wires the predicted mistake was proved. The ground CT wires were reversed and the Generator was put into service.

LESSONS LEARNT:

Theoretical calculations are needed to predict protection operation during such type of abnormal conditions.

No tripping is too small to be ignored. In this case although the machine had tripped due to mechanical reasons, the protection engineers were proactive enough not to ignore the protection mal-tripping leading to a major fault finding.

The ground CT polarity must be checked during commissioning.

CASE STUDY # 5: MALOPERATION OF DIFFERENTIAL RELAY DUE TO MISSING NEUTRAL RETURN.

ABSTRACT: *This case study deals with mal-operation of transformer differential protection due to opened neutral return path in CT secondary. It is illustrated with relay terminal connection diagrams showing the mistake and also snapshots of DR files which picked during this peculiar problem. It may be mentioned here that this problem took around 3-4 maloperations of the differential protection spread around 2-3 months to be finally discovered and rectified. The objective of this case study is to illustrate how DR analysis could have been used to pinpoint the fault very easily.*

BRIEF HISTORY: In a similar Generating Unit as depicted in oneline diagram 3.1, a Generator Transformer had suddenly tripped through Differential protection. Nothing was found in testing the GT and associated differential circuit. Thereafter the unit had tripped about 3-4 times through GT differential protection without any reported network fault. As the events did not point to any mal-tripping full focus of the investigation was on checking the transformer for internal faults and any problems within the differential zone. All low voltage site tests of transformer, Differential stability tests, DGA analysis of transformer oil were done after every tripping but nothing was found to be abnormal. We start our discussion about this event from a detailed analysis of the DRs that picked up in the tripped transformer differential relay as it was where the explanation of events was found later.

ANALYSIS OF DISTURBANCE RECORDS OF ALL 4 OCCASSIONS: Analysis of DR of Transformer Differential Relay showed presence of ground current pointing to physical ground fault in the HV system either internal to the transformer or in external network. The following table depicts the phases involved on LV side for

a LG fault on HV side through an Ynd1 transformer and shall be useful in the next part of analysis.

AN fault in HV causes A&B Phase currents to rise in LV	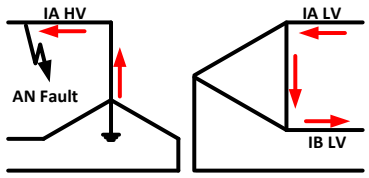
BN fault in HV causes B&C Phase currents to rise in LV	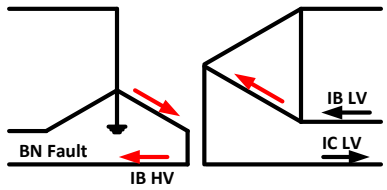
CN fault in HV causes A&C Phase currents to rise in LV	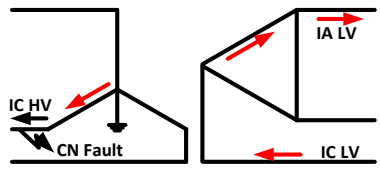

DR OF FIRST FAULT [Fig. 5.1]:

1. It is a BN [ABC Sequence] external ground fault in the HV system as evidenced by iX1 phasor to be opposite to iB-M2 and also B & C phase rising in LV [Source] Side in an Ynd1 transformer.
2. The first 20ms differential protection has remained stable as the faulted phase current is phase opposite to neutral CT current which provides correct zero sequence compensation thus showing ground CT polarity was correct.
3. At 20ms mark it is seen that suddenly 3I0-M2 vanishes, yet the ground CT continues to measure current and the faulted phase current remains high on HV side (M2 Side). The iB-M2 current and iX1 current dies down together in about 70ms which is confirmed by the fact that a 220KV Line had tripped with Zone 1 Distance Protection B Phase during that time. So it is clear that the fault was not cleared at 20 ms and it is this absence of 3I0-M2 but presence of iX1 which makes the differential mal-operate for external fault. **The question was what made the 3I0-M2 disappear?**
4. On studying the phasor relationship between the phase currents of M2 side (after 20ms of fault) it was noticed that iB-M2 current was being vector balanced by corresponding rise in iA-M2 and iC-M2 current with iA-M2 being more dominant. This could not be a case of a BN fault transforming to a AB fault because it can be seen that when the current in unfaulted phases of M2 rises there is no corresponding rise in currents of M1 side.
5. At this point the phenomenon could not be explained and it took three more maltrippings to finally ascertain the root cause.

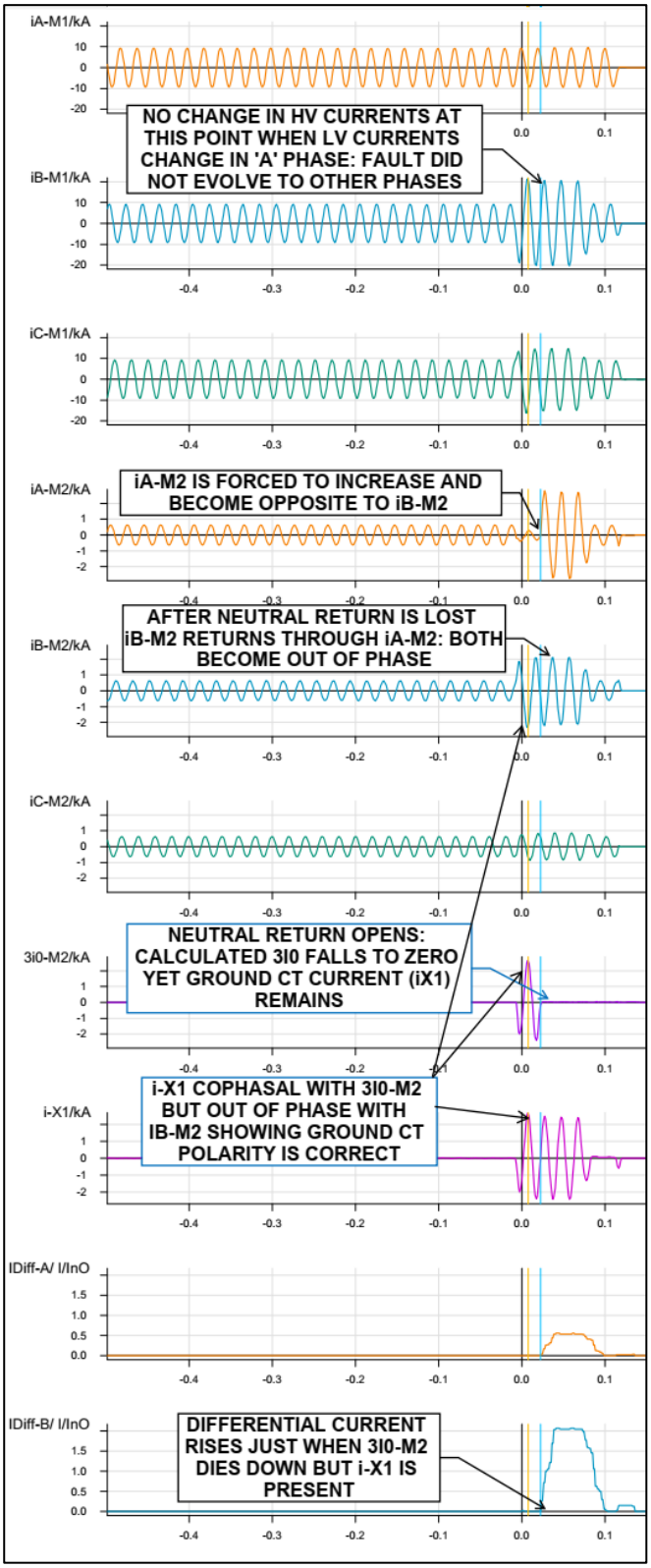

Figure No. 5.1 DR waveforms of first tripping. M1 = HV [System]; M2 = LV Side [Generator].

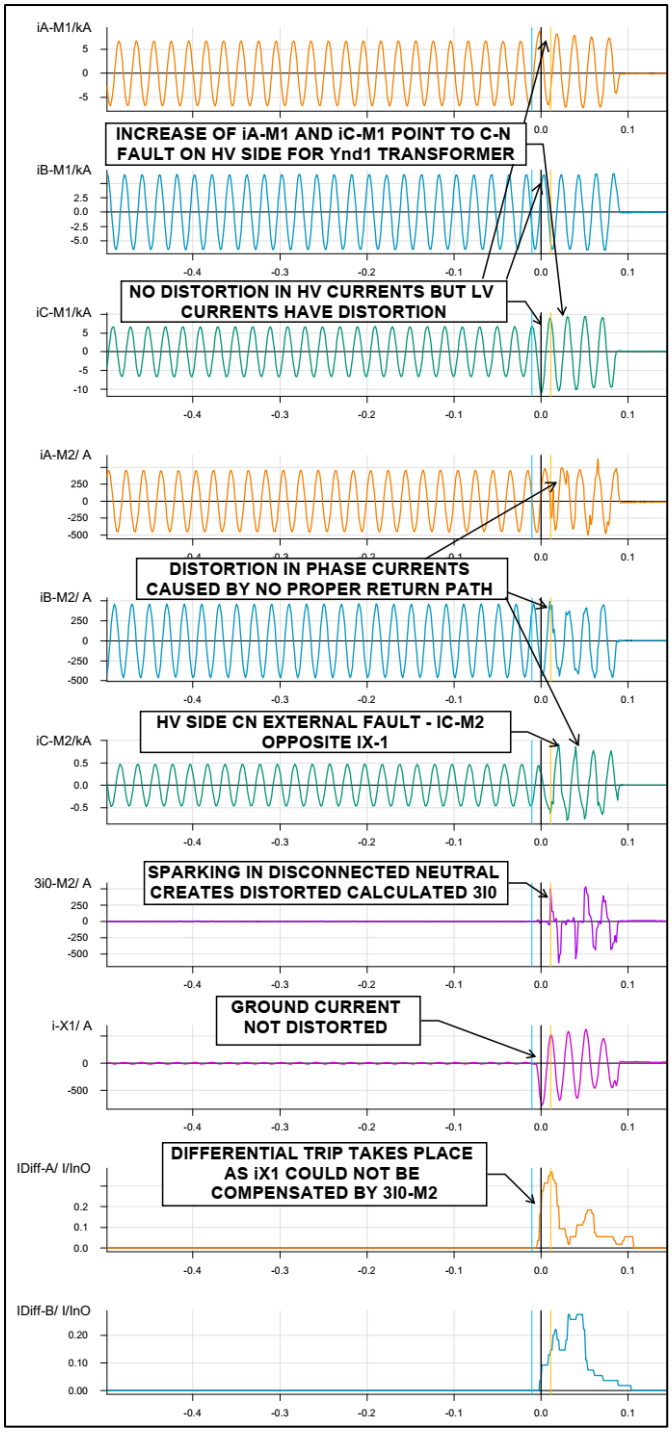

Figure No. 5.2 DR waveforms of second tripping.

DR OF SECOND FAULT [Fig. 5.2]:

1. It is a CN external ground fault in the HV system as evidenced by iX1 phasor to be opposite to iC-M2 and also A & C phase rising in LV Side.
2. In this case during the first cycle of fault there is ground current but no corresponding rise in 3I0-M2 to provide zero sequence compensation which causes the Differential protection to pick up. During this period again the HV side CT secondary currents balance among themselves and there is no resultant 3I0. Thereafter the 3I0-M2 current is conducting only during peaks of ground current iX1.
3. Probable explanation of this could be that there is sparking somewhere in CT secondary circuit neutral return path which was conducting only when the driving voltage from CT was reaching the peak value (during current peaks).

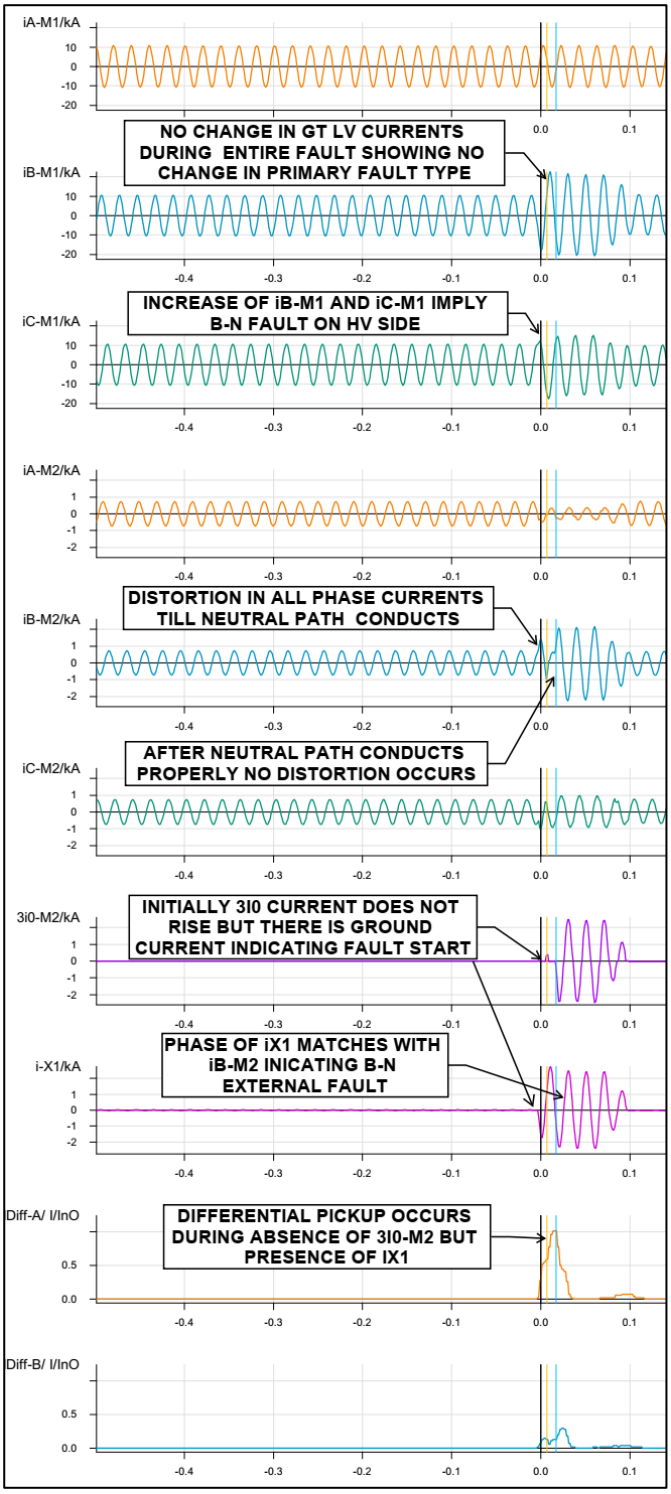

Figure No. 5.3 DR waveforms of third tripping.

4. As the CT Secondary neutral path was not conducting properly highly distorted non sinusoidal currents in HV side in all phases was seen whereas the LV currents had very good sinusoidal waveforms during the entire fault duration.

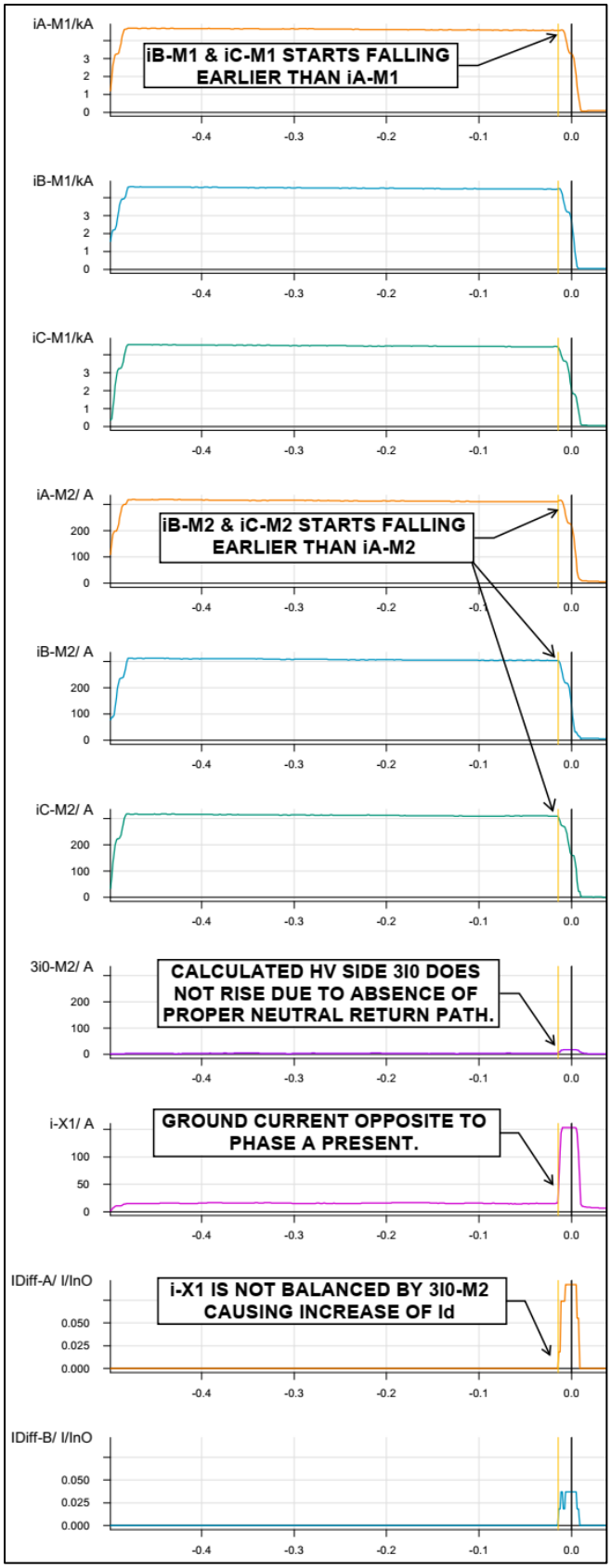

Figure No. 5.4 DR waveforms of fourth tripping.

DR OF THIRD FAULT [Fig. 5.3]

1. It is a BN external ground fault in the HV system for reasons as explained in first fault.
2. Here during the first cycle of fault there is absolutely no 3I0-M2 but iX1 is present. Thereafter suddenly 3I0-M2 appears and all HV currents appear as they should be for external B-N fault. Differential current rise during the absence of 3I0-M2 but drops off once current return path through neutral gets established.
3. This event resulted in Differential pick up only and no trip as the 3I0-M2 current returned fast enough to prevent yet another maloperation.

DR OF FOURTH FAULT [Fig. 5.4]

But in DR we see no rise in 3I0-M2. **It appears that as the zero sequence current is quite small in this case the driving voltage from CT is not high enough to drive the CT secondary current through the loosely connected neutral return.** We observe the difference of this case with that of Case Study # 4. There in a similar situation we had relay calculated 3I0-M2 exactly matching the ground current iX1.

It may be mentioned here that many of the explanations given in the DR analysis part were not properly understood during the first analysis but it all made sense once the problem was finally detected but it was this analysis which made us perform the test which really revealed the circuit problem.

TESTS AND FIELD FINDINGS:

1. The analysis of the previous DRs led us to believe that there was some intermittent discontinuity in the neutral return path which would be undetectable during injection of balanced 3 phase current during routine differential stability tests. So it was decided to check the neutral return path by single phase injection in CT secondary circuit from CT JB.
2. When single phase injection was done on CT secondary from switchyard between R Phase and Neutral it was seen that current could not be driven by the instrument. The same thing was happening in Y & B Phase also thus implying discontinuity in the phase to neutral connection.
3. Wiring checks revealed that the **HV side CT shorting to neutral link was not properly through i.e. it had much loose connection and the split TB # 6 link was barely touching (Fig 5.5).** The opening of this neutral was forcing the phase currents of HV side to realign themselves (in secondary). As the LV side secondary current was unable to match this realigned HV current, the summation differential current was having some value which was causing operation of 87 protection.
4. This problem could not be detected in normal differential stability using 3 phase balanced supply as there was no zero sequence current under those conditions. Hence there was no measurement discrepancies during the said test. When zero

sequence stability was done the current was measured at the REF relay whose CT circuit is completely different. No one bothered to check the current in Differential relay during transformer REF / Zero Sequence Stability tests.

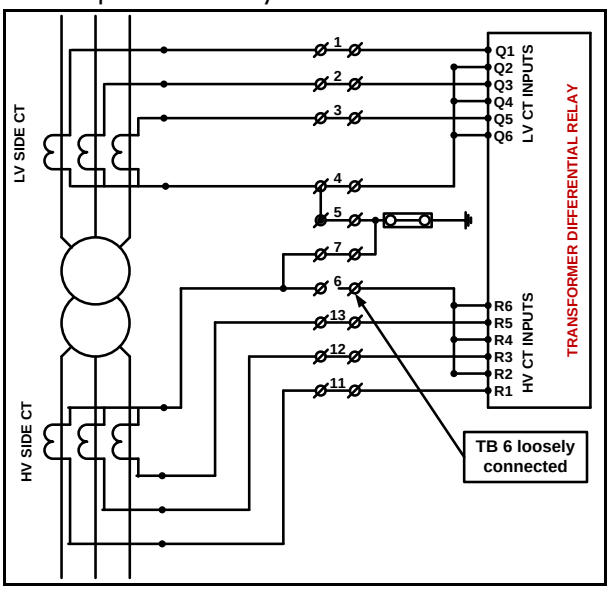

Figure 5.5: CT Circuit as found during investigation

LESSONS LEARNT:

Analysing the DR in minute details is more important than repeating routine tests. Checking the differential relay currents also during zero sequence stability tests is a good practice as this case study reveals. The problem could have been identified long ago.

CASE STUDY # 6: UNDERSTANDING LOCATION OF FAULT FROM DR ONLY

ABSTRACT: *This was an event where there was enough evidence in front of the investigators about where to search for the fault from a careful study of the picked up DRs but it took recurrence of three similar events to finally locate the faulty section. This case although simple enough in itself, is clear evidence about how the human mind follows false trial when a wrong idea has been implanted in it. It teaches us to keep an open mind during investigation of a protection malfunction and not follow mundane beaten track route to locate the fault.*

BRIEF HISTORY: At the powerhouse in Case Study#1 400/11/11KV Station Transformer [ST] had tripped by LV REF reportedly for downstream 11/.415KV transformer fault. Evidence of fault being in downstream was that this downstream transformer was tripping through 11KV side E/F Protection simultaneously. This had led everyone to believe that the LV REF protection of ST was mal-operating during downstream through faults. As ST Differential protection was not operating and there was simultaneous tripping in downstream 11KV it was safely assumed that fault was not in ST and hence the transformer was charged everytime and it stood O.K.

EXISTING PROTECTION SCHEME, SETTINGS AND OPERATING LOGIC: LV REF protection of 11KV side of ST was implemented in the Differential Relay itself [as discussed in Case Study # 1] and was of Low Impedance Biased type.

In Low Impedance REF scheme the three phase currents and neutral current are vector summed in software to yield the operating quantity i.e. IREF = (IA+IB+IC) + IY while the restraining quantity is |(IA+IB+IC)|+|IY| where |I| is current magnitude only & IY is the measured ground current. In Transformer LV Side REF Protection there may be 3 cases:

Case 1 – Out Zone Fault: The faulted phase current and the ground current should be of opposite polarity and thus cancel each other in the operating quantity.

Case 2 – In Zone fault fed from HV side only: The faulted phase current is zero (as fault is before REF CT) whearas the ground CT senses fault current thus creating the REF operating quantity equal to Ground current.

Case 3 – In Zone Fault fed from both HV & LV Side: The faulted phase current is in additive to ground current and produces twice the operating quantity as compared to Case 2. Thus the REF operating current would be twice the phase or ground current scaled to primary amperes.

In our system the fault will not be fed from LV side as it has no source, so we shall stay with only Case 1 & 2.

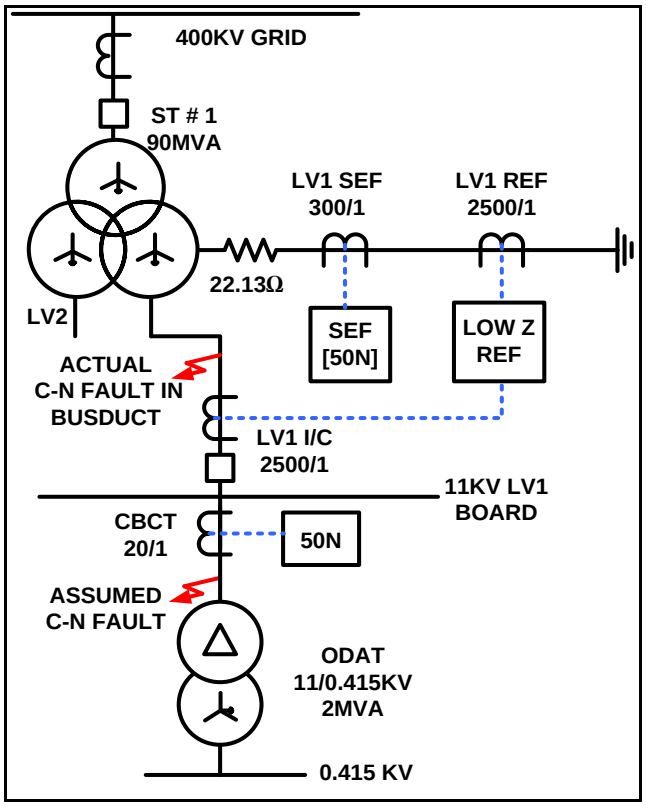

Fig 6.1: SLD of ST along with downstream Transformer

WIRING IN RELAY: The Differential relay was MICOM P633, a three winding Transformer Differential Relay with currents received as follows:

1. Side a, b & c of relay was receiving phase currents from transformer HV, LV2 & LV1 sides for 87 protection.
2. Side b neutral was used for Standby EF prot of LV1.
3. Side c neutral was used for REF prot of LV1.

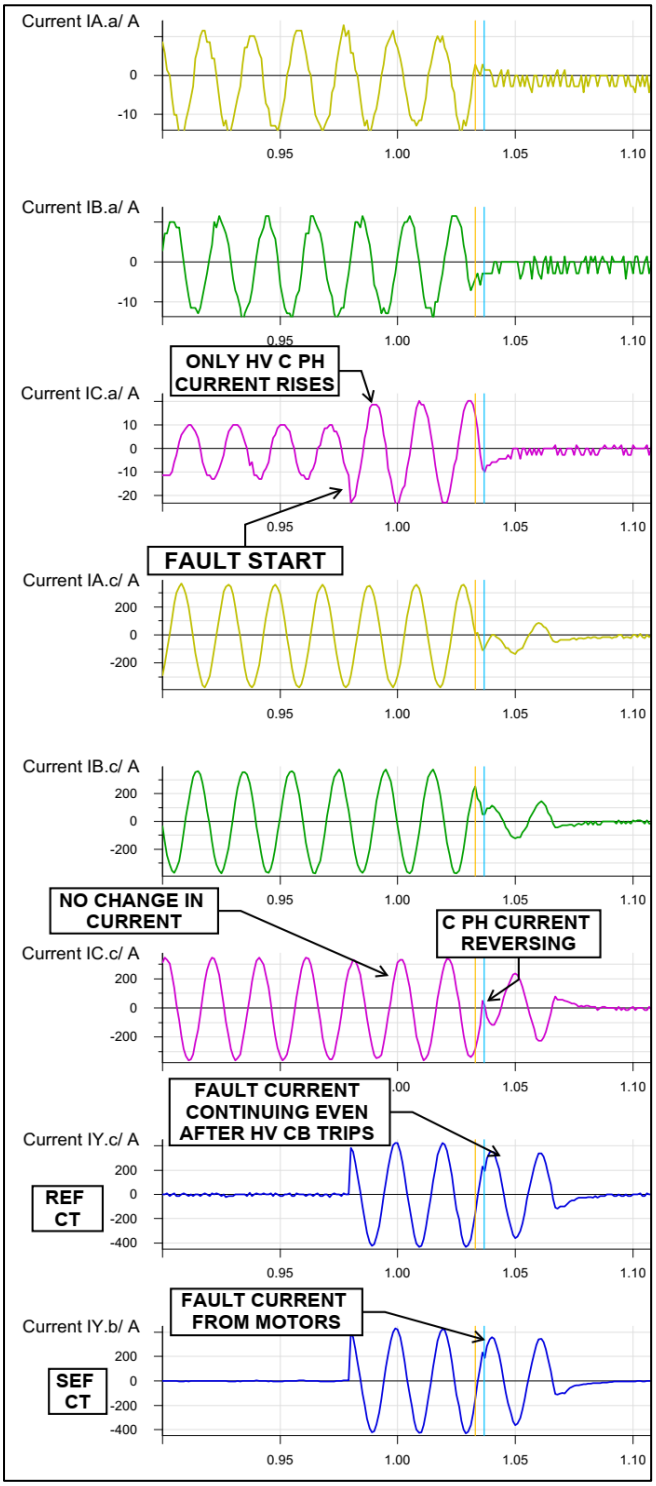

Fig 6.2: DR of ST tripping through LV REF Protection. Side a = 400KV [HV] Side & Side c = 11KV [LV] Side

INFORMATION FROM ST DR:

The DR of ST relay showed presence of 300A current in the both side 'b' neutral & side 'c' neutral of relay which was the maximum possible 1LG fault current as the system is resistance grounded by resistance of 22.13Ω.

The peculiar nature of the DR was that this neutral current was not being balanced by corresponding rise in any of the 11KV phase currents which should be the case for a fault in 11KV boards as reported. During the entire duration of fault there is absolutely no change in the phase currents from the pre fault load current level although there was reflection of a C-N fault in the HV side. A 300A fault current at 11KV would be reflected as 300*400/11 = 8.25A at 400KV level. Approximately 8A increment was noticed in the HV 'C' phase current during the fault thereby signifying presence of real fault in C Phase in LV side. But the unanswered question was why the LV phase current was not showing any increase in C phase current as should be the case for Ynyn0 transformer.

INFORMATION FROM ODAT DR:

In the ODAT incomer DR there was evidence of tripping through E/F protection. The C Phase voltage had dropped down to zero while the other phase voltages had shot upto 11KV [rated LL voltage of system] signifying presence of real E/F in the 11KV system. As ODAT relay DR had picked up due to tripping of ODAT transformer on E/F, an obvious belief developed in the mind of investigators and the powerhouse O & M personnel that the ST had over-tripped through REF on through fault.

INVESTIGATIONS DONE AND ANALYSIS OF FAULT:

1. Relay Settings were checked. Operand of LV REF was found to be correctly set to side 'c' currents i.e. the phase and neutral of side 'c' would be used in REF function for if it would have been set to side 'b' the neutral CT would be getting current from Standby E/F CT but the corresponding neutral current would not be balanced by phase current which belonged to the other LV board.

2. In relay settings in field type of REF protection was found to be correctly set to Low Impedance Sum IP i.e. REF Diff Qty =|IY|= Measured current in Transformer Starpoint and REF Bias Qty =|IY+IN| where IN=Ia+Ib+Ic= Vector Sum of phase currents calculated by relay in software. This correct setting meant that the REF function was operating correctly in this relay as here REF Diff Current =IY=300A and

REF Bias = IY+IN =300+0=300A which was inside the trip zone.

3. Measurement checking during zero sequence stability tests, CT circuit, CT polarity, CT circuit phase to ground and phase to phase IR checked to preclude any possibility of current getting bypassed, relay was tested several times for REF stability but all were O.K.
4. By this time exactly similar event had occurred thrice and every time we were performing the same tests, finding nothing and finally everything was being charged and all stood O.K. But after the third tripping we decided to delve deeper into the LV fault that was actually happening. Interrogation revealed that in all the 3 cases no actual fault had been found and everybody including us had assumed that there was fault in ODAT Tr just because it's relay had tripped in E/F.
5. Now the fault was revisited from another angle – what if the ODAT Tr relay was tripping in excess and there was a real fault in the REF Zone. **That would explain the most perplexing thing about this fault i.e. presence of neutral current in both cores of neutral CT but absence of any corresponding rise in LV1 phase CT.** If there was a CN fault in 11KV incomer busduct say the fault current would rise through the LV1 neutral but the same current would not be reflected in phase currents because the phase currents have been taken from 11kV board incomer CTs and the fault is before it.
6. The ODAT relay tripping DR was checked for amount of fault current and surprisingly it was found that the current where trip had been issued was only 2.0A primary. On checking the E/F P/U settings it was found to be only 10% = 2A Primary as it was fed by a CBCT with CTR 20/1. Moreover the timing was instantaneous. Thus it was highly possible that the fault contribution from induction motors in the secondary LV Side of ODAT was responsible for operating the ODAT E/F protection.
7. **DR of similar fault:** To confirm our assumptions we looked minutely at another DR of a LLG fault in 11KV busduct of the ST in another powerhouse. There a similar ST supplying LV boards had tripped through Differential & LV REF protection for a fault in 11KV LV busduct of ST. So if this time the fault was inside the busduct portion this DR should have the similar characteristics though in the older case the fault was LLG where the 11KV grounding resistance [NGR] had been damaged by fire thus bypassing the NGR causing the neutral current to rise to approx. 12kA.In this DR the difference in HV fed fault current and LV Motor fed fault current was very clear in the fact that a prominent amount of fault current had continued to flow after the HV CB had opened but the LV CB had remained closed (for about 40ms). Moreover there was clear indication of polarity reversal of the LV current showing that till the HV CB opens it.

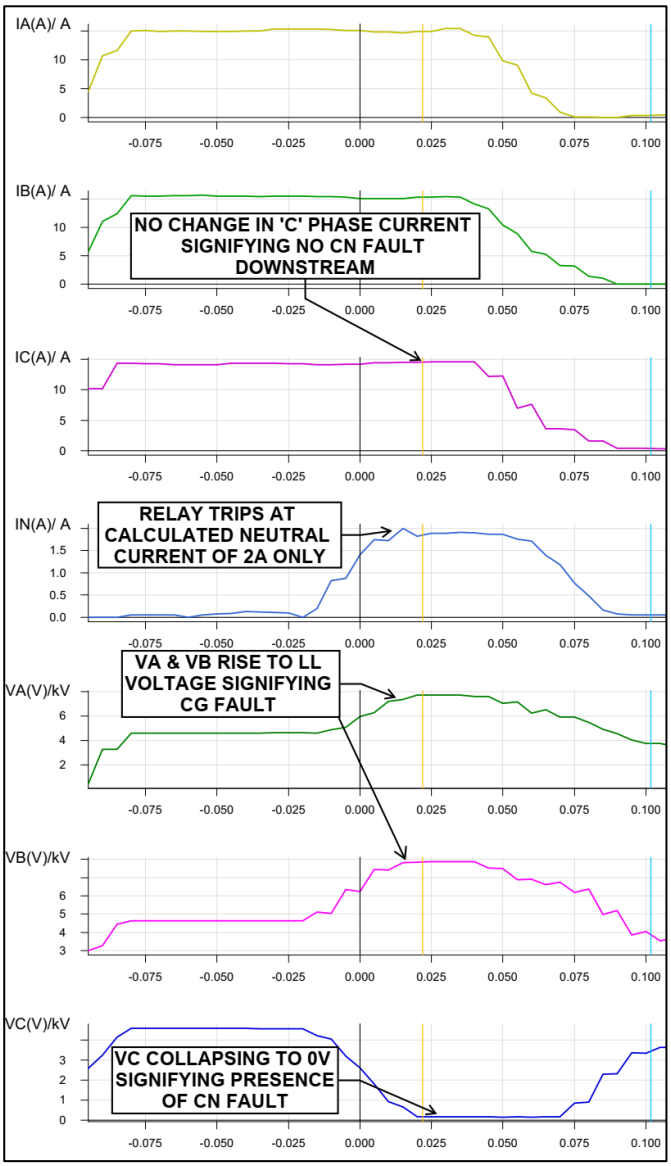

Fig 6.3: ODAT HV Side DR which tripped through E/F Protn.

8. The question of why differential protection was not operating in spite of the fault being within its zone was that for a 1LG fault the maximum unbalance current was 300A at 11KV and 8.5A at 400KV side. Such low unbalance was below the differential P/U of 20% of transformer full load current. In the other case as the LV fault current was of the order of 20kA, differential protection had operated.
9. So it was theoretically concluded that the actual C-N fault was before 11KV board I/C CT and the ODHT relay was tripping in excess from the unbalance in

the board induction motor back fed current as the E/F setting was only 2A instantaneous. It was checked that throughout the 11KV outgoing feeders and transformers of all station boards and unit boards this was the only transformer whose setting was so sensitive.

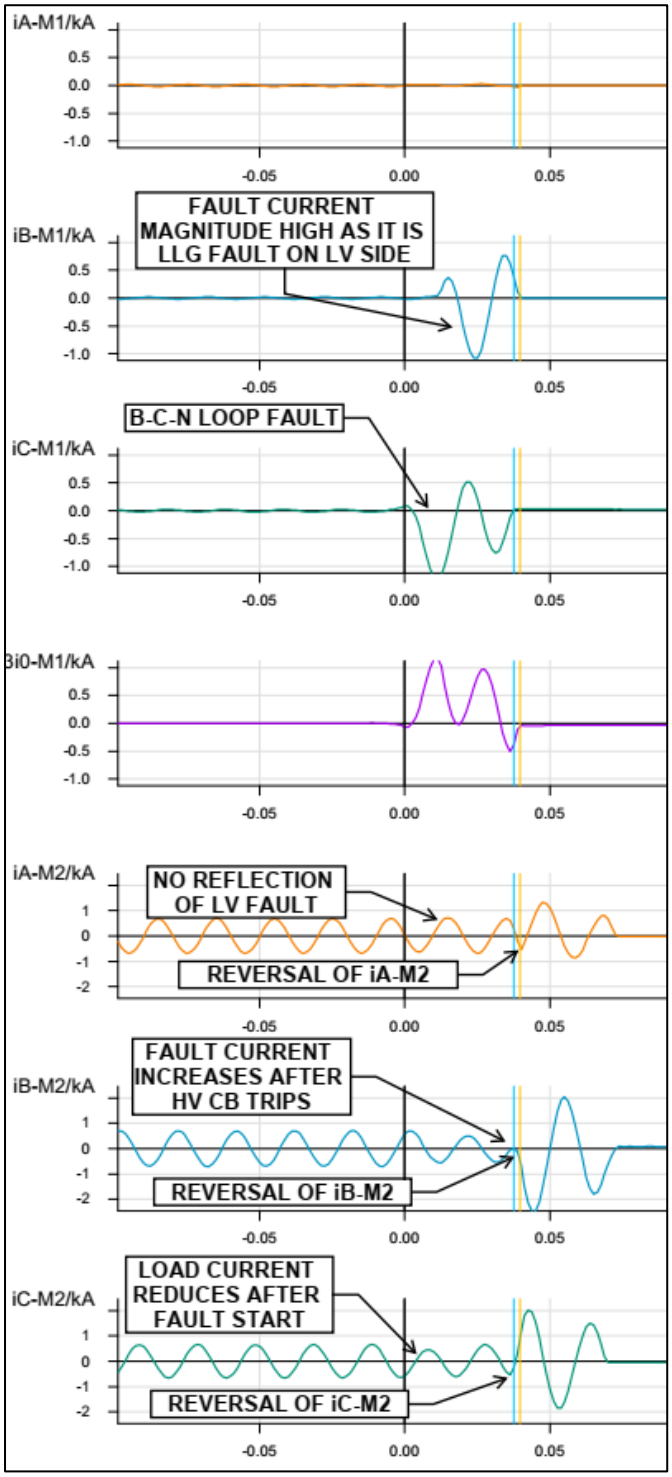

Fig 6.4: Similar DR of 11KV busduct fault of ST. M1- 400KV [HV] Side & M2 – 11KV [LV] Side.

10. Apart from DR analysis it was observed that all the three trippings had occurred during rainy season in this region which pointed to insulation failure type of fault. As DR was pointing to the zone of fault before CT it was proposed to check the IR and perform a Hi-Pot withstand test Combining common sense and DR analysis the suspect region was 11KV busduct from ST secondary to ST Incomer.
11. During the next available shutdown, after disconnecting ST LV side from busduct, a HI-Potential withstand test at 13.5KV Ph-N [2*Un+1=2*(11/√3)+1=13.7KV] was done on 11KV busduct but the system withstood it for 1 minute in all phases.

ACTUAL FAULT FOUND: During the same unit overhauling shutdown, the 11KV ST LV1 incomer busduct was opened and checked. It was found to have flash marks and some places which had waterlogging particularly in the C Phase busduct. It was apprehended that this water ingress inside the busduct was causing these intermittent faults as it was backtracked that each of these faults had occurred 2-3 days after rains. Probably evaporation of this accumulated rain water was causing these faults.

REMEDIAL MEASURES: The ODAT relay E/F setting was revised to 10A primary and a time delay of 100ms was introduced in line with the E/F settings of similar transformers. The busduct water ingress was cleaned up and dried before the ST was put into service. After such corrective action no more cases of mysterious REF operation was reported thus proving that water ingress was the only root cause for these events.

LESSONS LEARNT:

The most important lesson learnt in this case was the concept of induction motor backfeed into fault which was used to pinpoint the fault location in this case.

Even if a section withstands the HI-Potential test there may be possibilities of the section to be the creator of intermittent faults. Thus evidence of DR is more significant than the evidence of test results.

It is important for an investigation engineer not to be blinded by the thought process and root cause analysis presented before him due to popular opinion but approach the problem in the most unprejudiced manner possible on the basis of his clinical analysis of all picked up DRs, Event Log, implemented relay setting data etc. In this case had the downstream transformer DR been analysed before repeating all routine tests the problem would have been identified long ago.

CASE STUDY # 7: NON OPERATION OF REF PROTECTION FOR FAULT WITHIN REF ZONE

ABSTRACT: *This event is about non-operation of REF protection for a fault within its REF Zone. The case study*

deals with the circuit anomaly that existed which prevented the low impedance REF protection [64R] not to operate. It emphasises the absolute necessity of performing zero sequence stability tests when neutral CTs are paralleled for providing REF protection to two transformers connected in parallel but having only one protection system.

BRIEF HISTORY: It was reported that at Substation 'X' power transformer 2 & 3 had tripped through Differential protection. Here the Low Impedance REF of HV side [64R] & Differential Protection [87] was given from the same CT core. As the fault was found to be on HV side within the REF zone and 87 protection had detected the fault correctly and with the REF protection processing the same currents it would be expected that REF should have operated. The unanswered question thus was why was REF protection unresponsive to this fault?

The peculiarity of this installation was that there were two transformers with only one Differential & REF relay the reason being only one bay was available on the HV side. Basically instead of augmenting one 50MVA transformer by a 100MVA one, two 50MVA transformers with similar percentage impedances had been connected in parallel to cater additional load. On LV side there were two bays having two separate sets of CT and breakers but on HV side the paralleling was done by jumpering at primary level and there was only one CT available. The LV Phase CT and HV neutral CT wiring had been paralleled before entering the 87/64HV relay as two separate sets were available.

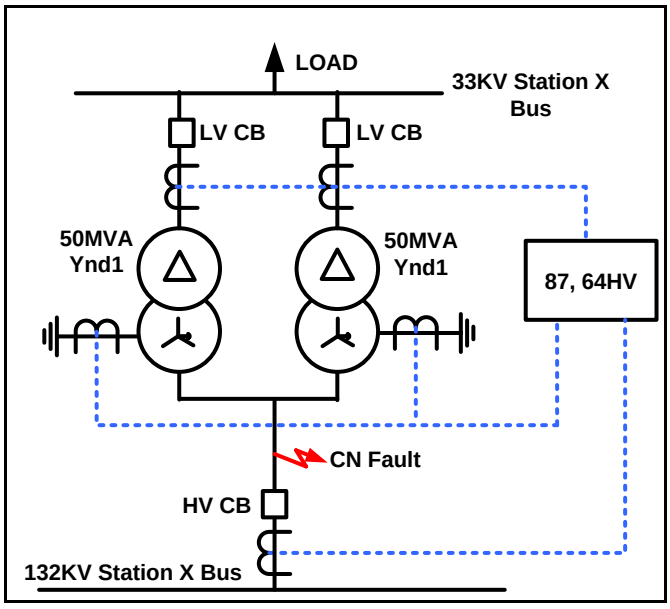

Fig 7.1: Protection Single Line Diagram

DATA FROM DR AND ANALYSIS OF FAULT:

It was seen from the DR that there was a CN fault within the differential zone with C Phase current rising upto 11kA approx. which was very close to the 1LG fault level of Station X bus. As LV was not contributing into the fault and LV C phase current had dropped drastically during the fault it could be safely conjectured that the fault was within transformer HV CT and transformer bushing.

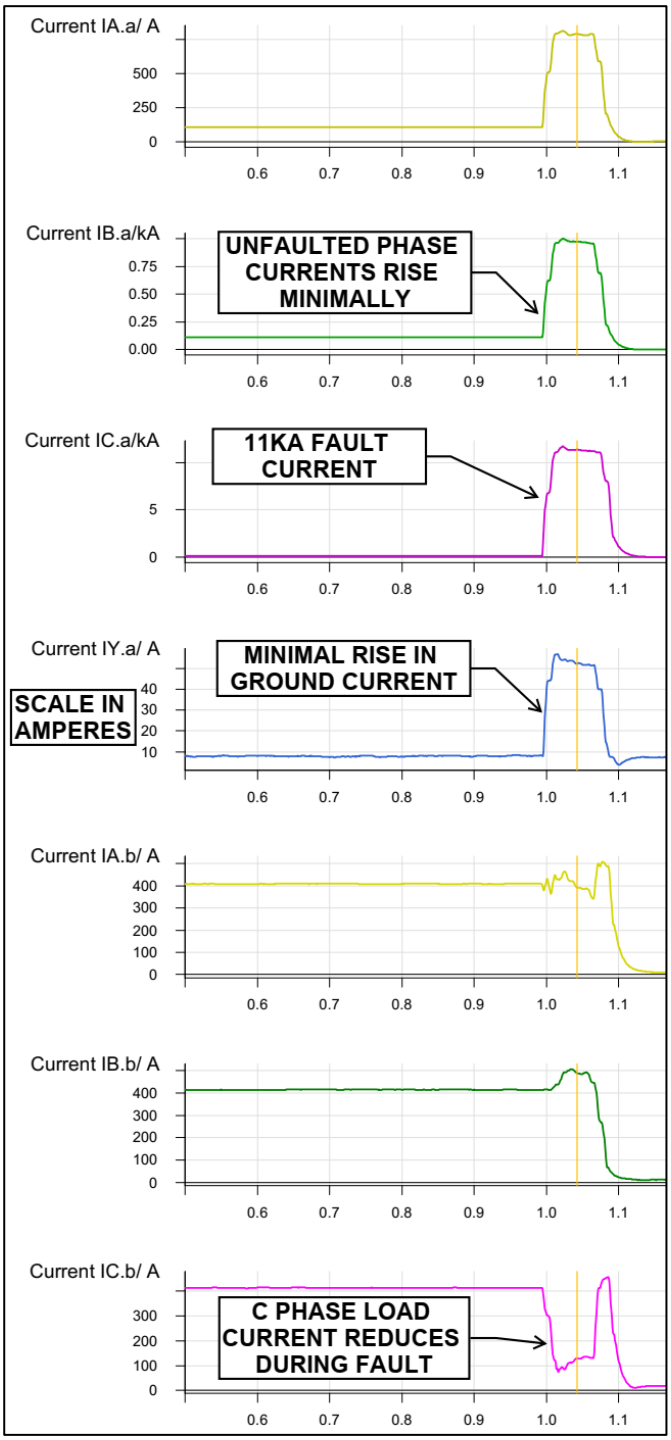

Fig. No. 7.2: DR of Differential relay [Side a. – 132KV side i.e. source side; Side b. – 33KV i.e load side]

So operation of differential protection was correct. **But the peculiar point was the absence of ground current (IY.a) in the DR.** As the HV REF protection was implemented within AREVA P632 differential relay and the REF mode setting was 'Low Impedance Sum IP' presence of ground current was mandatory for relay

operation. So the relay had behaved perfectly O.K with the analog quantities provided to it.

TESTS DONE & CORRECTIVE ACTION:

1. As the HV neutral CTs of two transformers had been paralled before entering the relay there existed the possibility of wrong polarity [opposing polarity] connections such that the primary level ground currents were being cancelled out before entering the neutral of the differential relay. Moreover as in AREVA relay the zero sequence elimination is based on I0 calculated by software and not the physical ground current, the wiring problem would not affect zero sequence correction in differential protection but would only be highlighted during non-operation of REF for in zone faults.
2. Performing zero sequence stability test on transformer HV side by applying single phase voltage between transformers HV leads shorted and neutral showed that there was indeed no current in the neutral of the relay whearas each NCT was replicating the primary current properly. Reversing the polarity of one of the NCT solved the problem.
3. Now the question was whether the CT polarity after paralleling was as per relay manual connection examples. To check whether the NCT polarity was correct we checked the software calculated REF operating current and found it was showing value equal to the bias current which showed that the NCT polarity was incorrect w.r.t the phase CT. The NCT polarity was reversed and then the REF differential current became zero and the bias current was as that of the previous value.

LESSONS LEARNT:

Performing REF stability test is essential to understand the correctness of CT polarity related to REF protection and such tests must invariably be performed during commissioning of such protection.

Proactive action of the protection engineers of the concerned utility corrected a circuit problem which would have caused some other more serious malfunction someday. Thus it is always important to investigate a problem even it is not the cause of concern right now as it will bear fruit later.

CONCLUSIONS:

1. High Impedance REF schemes should consider maximum phase fault current among 3LG, 2LG, 1LG and LL faults for stabilizing resistance calculation. Generally 3LG or 1LG fault gives the maximum Phase fault current.
2. The CT cable lead resistance in REF stabilizing resistance calculation should be properly chosen after understanding the path of fault current during saturation of Phase / Neutral CTs during various types of fault. Generally the one way CT lead length is the distance of furthest CT from the point where the phase and neutral CTs are shorted before proceeding to the High Z REF relay.
3. For systems with different Phase RCT & Neutral RCT, widely varying 1LG & 3LG fault currents, different lead lengths from CT secondary to CT starpoint & PCT & NCT shorting point, the saturation voltage needs to be calculates for multiple conditions and the highest V_S needs to be used for R_S calculations.
4. Checking the differential relay currents during REF or Zero Sequence Stability tests is a good practice even when the REF protection is implemented in a different relay than the transformer Differential relay as it alone can identify polarity reversals of transformer Neutral CT. If the Transformer Differential relay uses measured transformer Neutral current for zero sequence elimination in differential protection (as in Siemens 7UT relays) then polarity check of Transformer Neutral CT is a must step during commissioning of the same.
5. Single pole open conditions also create ground currents in Star Grounded transformers and differential protection zero sequence correction comes into effect during this brief time period too.
6. Opening of CT secondary neutral return path caused heavy distortions in faulted phase as well as other phase currents during LG or LLG faults and such problem cannot be identified during normal three phase differential stability tests as the circuit will allow undisrupted flow of balanced current. The only way to understand CT secondary neutral opening is by single phase injection or measuring neutral current in all CT cores during REF stability tests.
7. Motor backfeeding onto a fault may also cause relay operations after the generator source of fault is segregated and this is the reason why in short circuit studies motors have always been treated as a source of fault current.
8. The fault investigation engineer should never be blinded by the thought process and root-cause analysis presented before him by others but approach the problem with a completely open mind based on only factual data such as DRs, Event Records, implemented settings in relay etc.
9. While paralleling CTs used in protection it is mandatory to correctly match polarities as otherwise the fault current shall cancel itself before reaching

the relay. It is also mandatory to perform zero sequence stability tests on a transformer during commissioning of REF protection.

ACKNOWLEDGEMENTS

The author wishes to sincerely thank all his departmental co-workers and superiors of CTC department of Damodar Valley Corporation who were involved along with the author in the investigation work carried out when the events mentioned in the above case studies occurred. The author expresses deep appreciation to Mr. Sutanu Banerjee and Mr. Akhand Pratap, his co-workers at CRITL for their valuable insights and assistance with root cause analysis and for the countless hours of discussion at office which helped in unravelling many of these problems. The author would specially like to thank his superiors Mr. Bidhayak Datta, Mr. Pankaj Datta and Late Sri Mridul Chanda who were his mentors over the years for their constant encouragement and motivation.

REFERENCES

1. MICOM-P643, ABB-RET 670, SIEMENS-7UT, SEL-387, ER-TPRO Instruction Manuals.
2. Power System Protection, P.M.Anderson.
3. Analysis of Faulted Power Systems, P.M.Anderson, IEEE Press, 1995.
4. Lewis Blackburn & Thomas J. Domin, Protective Relaying Principles and Applications.
5. Protective Relay Application Guide – GEC Measurements.
6. Disturbance Analysis for Power Systems, Mohamed A. Ibrahim, John Wiley and Sons.
7. Circuit Analysis of AC Power Systems, Vol-I – Edith Clarke.
8. Transformer Fault Analysis Using Event Oscillography – Casper Labuschagne and Normann Fischer, SEL Inc.
9. Lessons Learned Through Commissioning and Analyzing Data From Transformer Differential Installations – David Costello, SEL Inc.
10. Transformer Protection – An Analysis of Field Cases – Stanley E. SEL Inc.
11. Secure Application of Transformer Differential Relays for Bus Protection – Michael Thompson and Ralph Folkers, SEL Inc. & Amy Sinclair, ELECSAR Engineering.
12. Analysis of an Autotransformer Restricted Earth Fault Application – Normann Fischer, Derrick Haas, and David Costello, SEL Inc.

BIOGRAPHY OF AUTHOR

The author received his B.E(Electrical) degree from Bengal Engineering College, Shibpur, India (now IIEST, Shibpur) in the year 2000. He has served in the Central Testing Department of Damodar Valley Corporation, Maithan, Jharkhand, India for the last 17 years as a Protection Engineer. He specializes in testing of numerical relays, protection schemes, relay setting calculations, fault analysis, protection malfunction investigation, load flow and short circuit studies. His current responsibilities include relay setting calculations for all protective relays in DVC network, protection coordination studies, root cause analysis of major faults and system disturbances and investigation of protection system mal-operation occurring in DVC Grid and planning of remedial measures.