




APPLICATION AND INTEGRATION OF AUTOMATION-BASED TOOLS FOR EFFICIENT AND ACCURATE MODELING OF TRANSMISSION SYSTEM PROTECTION

Presented by:

Chris Bolton, San Diego Gas & Electric®

Aaron Feathers, Pacific Gas & Electric

Michael T. Miller Jr., PECO Energy

Jacob Tucker, Commonwealth Edison






Introduction

- Protection Engineers are being asked to “do more with less”
  - More studies, more validation, more compliance
  - Less time and less resources
- Simulation capabilities can help – included with major short-circuit software tools
- However, protection representation is required to use simulation capabilities
- Protection modeling is simple in concept, but:
  - Significant effort in modeling an entire system for larger utilities
  - Significant effort is needed to keep that model up to date

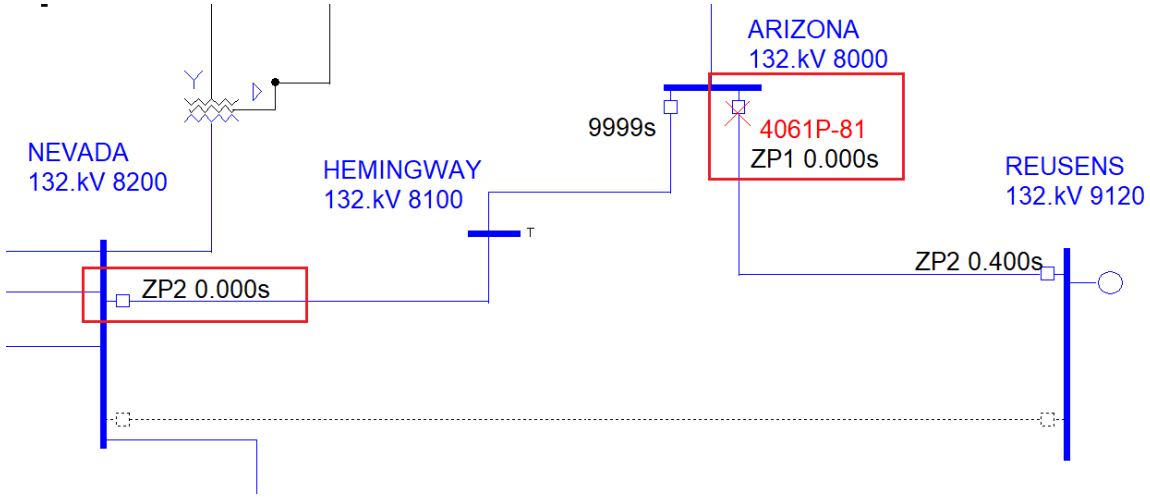

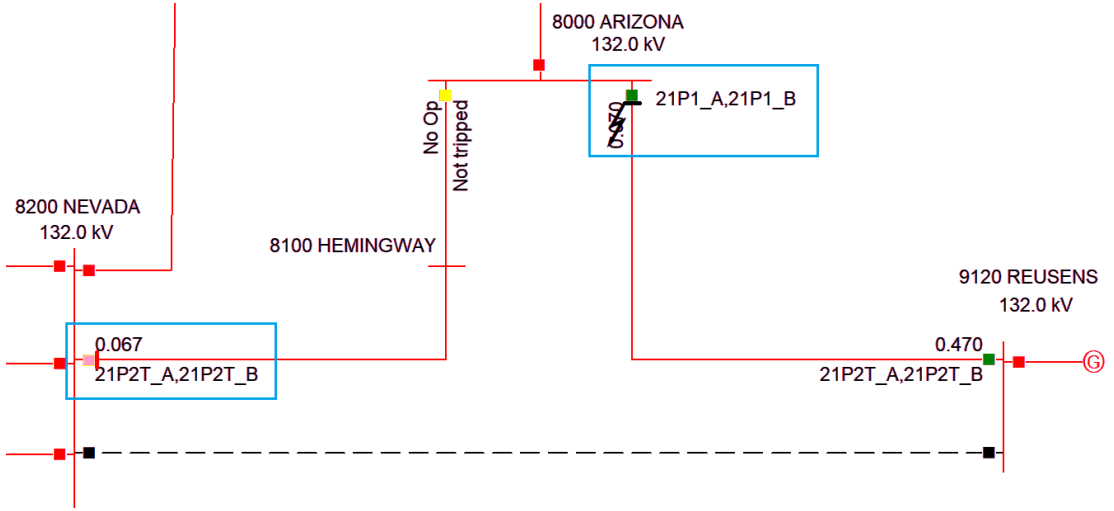

Above: Simulated relay responses to fault on two widely used short-circuit software platforms, showing coordination issue between local Zone 1 and backup Zone 2 distance elements

Automated Protection Modeling Process

Automation-Based Tools can address these modeling challenges and enable simulation-ready protection representation to be created quickly, efficiently, and accurately.

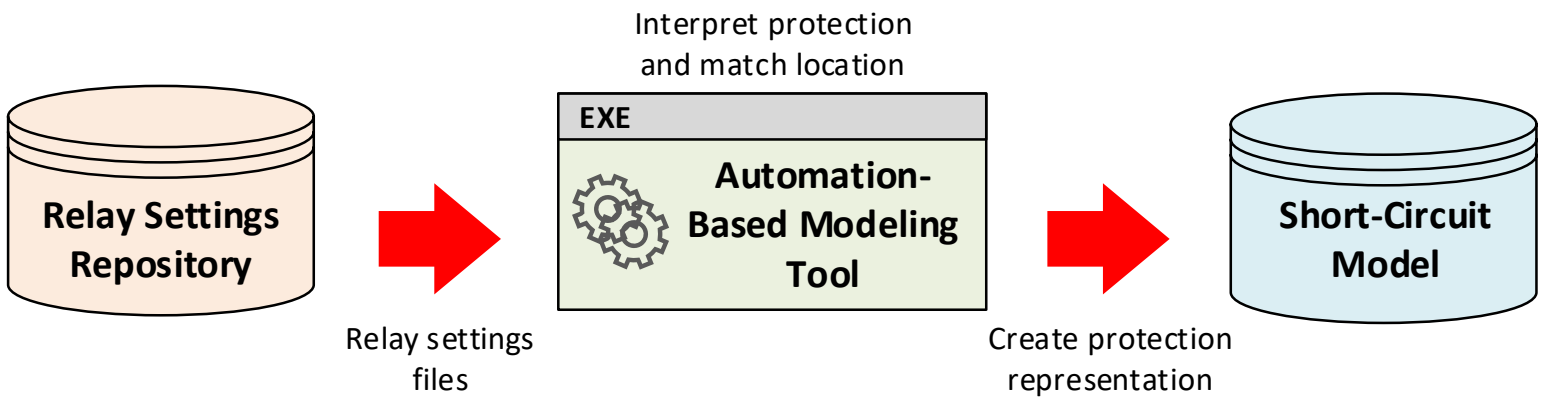

Relay Settings Repository

- Logical source for settings data
- Use actual field-deployed files
- Already part of process for settings storage

"Logic Engine" Bridge

- Interpret protection files
- Transform data to format needed in Short-Circuit Software
- Match repository records to location in Short-Circuit Model
- Used-maintained Translation Table

Short-Circuit Software

- Protection representation depends on software platform
- Tools push data and configure representation to be simulation-ready
- Extra tag data may be written to help various functions

Automated Protection Modeling Application and Integration

In the application and integration of automation-based modeling tools, organizations were required to consider the following in order to:

- Prepare
- Customize

- Deploy
- Utilize

- Maintain

Implementation and Deployment

- Technical Considerations
- Tool Customization
- Logistics

Utilization

- Utilization Model
- Model Management
- Processes

Governance

- Data Integrity
- Translation Table
- Tool Updates

PECO Energy - Introduction

- PECO is the largest electric and natural gas utility in Pennsylvania serving approximately 1.6 million electric customers and 521,000 natural gas customers.
- Philadelphia Electric Company, PECO was incorporated in 1902 but finds it origins in The Brush Electric Light Company of Philadelphia, which was formed in 1881.
- PECO's transmission lines operate at 69kV, 138kV, 230kV, and 500kV
- Operates 457 power substations
- More than 30,000 miles of distribution and transmission lines
- PECO is one of the oldest and largest utility companies in the United States, PECO has its origins in the work of Thomas Edison.
- PECO initiated the effort to implement automation-based modeling tools primarily to assist with lessening the burden of PRC-027 coordination
- Also is planning to utilize this capability for protection performance studies (differentials and pilots are included in the protection)

PECO Energy – Short-Circuit Model

- PECO's short-circuit model is maintained by PJM, a regional transmission organization
- This is a very large model that contains system elements from many different utilities, in addition to PECO
  - Over 33,000 branches!
- This can be a problem for the modeling tool user interface, both in performance and simply finding the line to model
- Limit scope to that relevant to PECO using the area identifier on each bus
  - Only those lines with at least one bus in PECO's "area" will show up

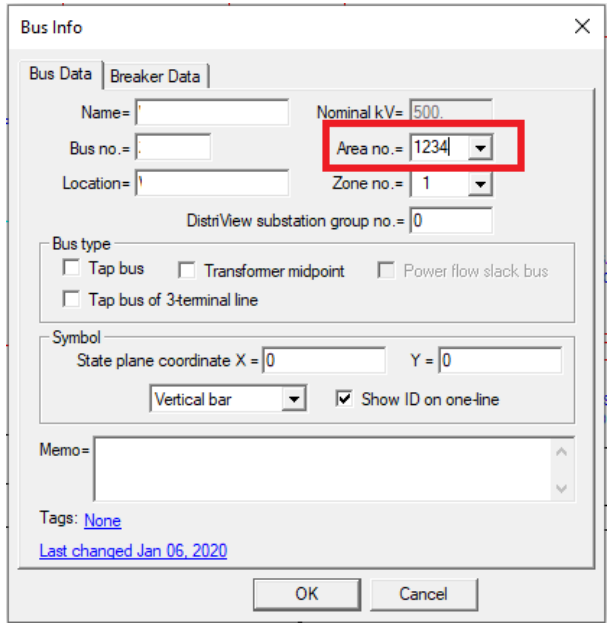

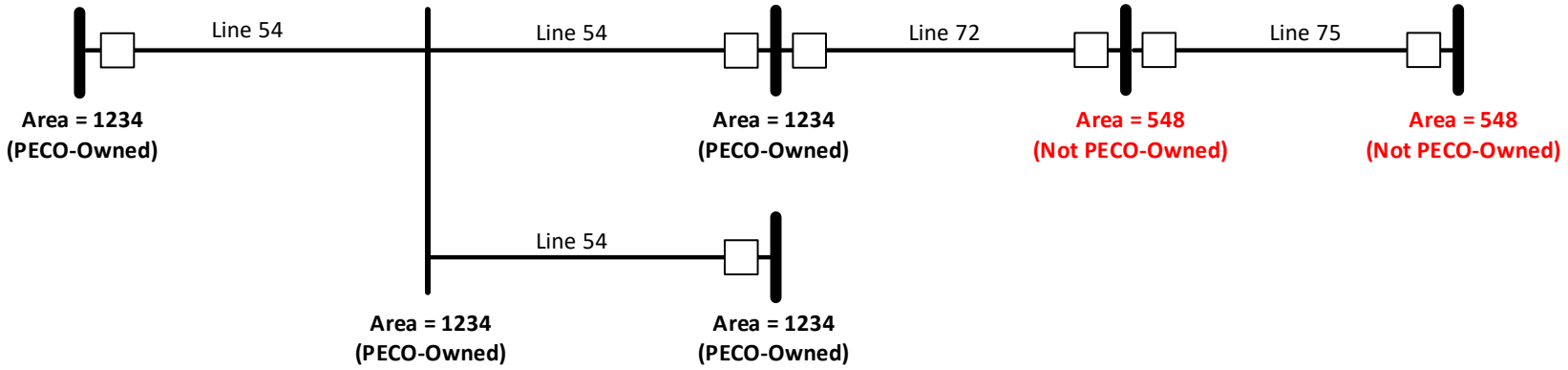

Above: Lines 54 and 72 will show up for modeling in the tool due to having at least 1 bus that is PECO-owned. Line 75 will not show up since all buses are not owned by PECO.

PECO Energy – Fault Detectors

- Customization of tools for protection interpretation
- Some older firmware versions of certain microprocessor relays do not allow users to set fault detector pickup values
  - Repurpose instantaneous overcurrent as a fault detector
  - Tied together using relay trip expression
  - Modeling tools need to interpret this situation
- Relay model in short-circuit software does not allow for custom fault detectors
  - Workaround is to create non-tripping distance zone and overcurrent
  - Use custom logic expression to tie both together into a tripping element
- Normally would be tedious, but can be done automatically with these tools

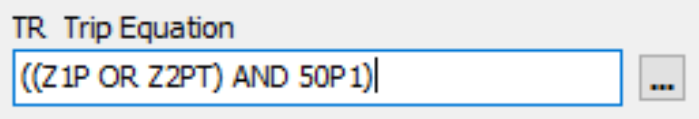

Above: Relay trip expression

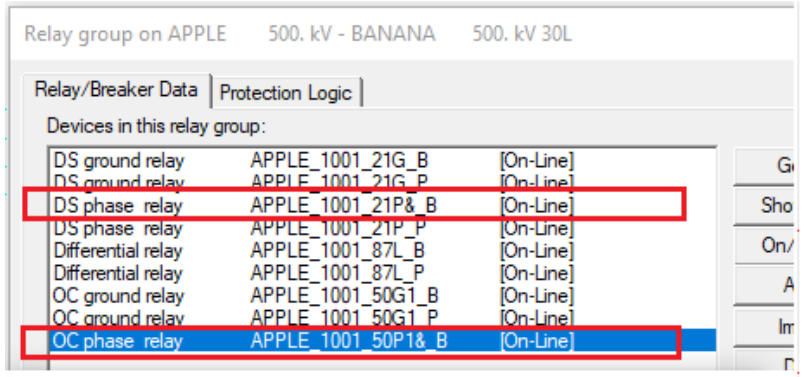

Above: Creation of non-tripping distance and overcurrent functions

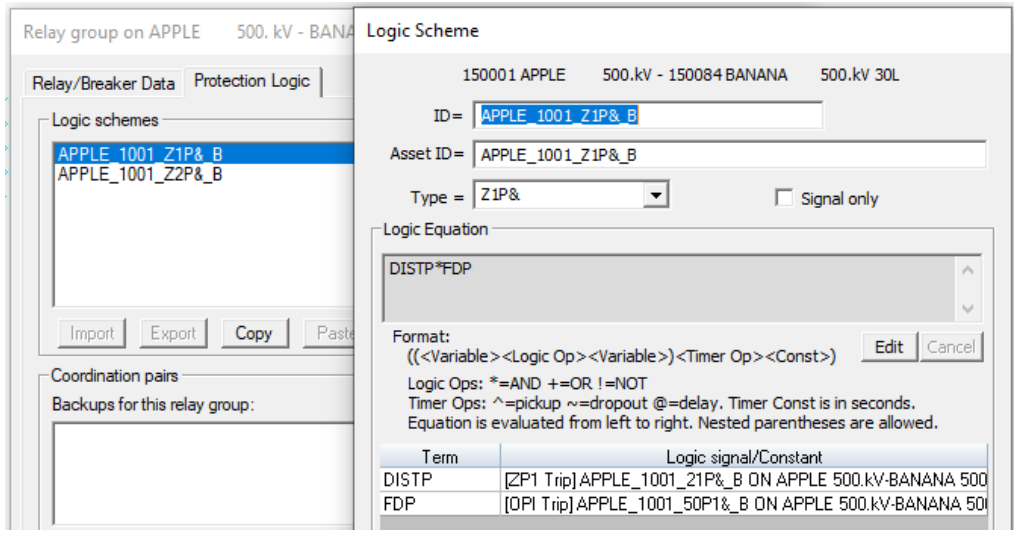

Above: Custom logic scheme to tie non-tripping functions together

PECO Energy – Electromechanical Devices

- PECO has a number of electromechanical relays that need to be modeled
- More complicated than the neat single-device-per-package paradigm of microprocessor devices
- Need to determine:
  - What functions do each of these devices serve?
  - Which devices are used for backup tripping and which are used for communications-based protection schemes only?
- As part of repository data review, all lines with electromechanical devices had relays mapped out and functions determined
  - Set of rules were developed to assign certain devices types to functions
  - Some provision for device combinations (presence of timers for tripping distance zones)

Relays	Pilot Present?	Z1 Trip	Z2T Trip	Z3T Trip	Ground OC Trip	Pilot Initiate	Pilot Block	Pilot Ground	Logic
CEB, CEY, CFC, CNP, SC	DCB					CEY*SC	CEB*SC	CFC, CNP	Lack of timer; distance elements are for pilots only
CEB, CEY, JBCG, SC, CLPG, SAM	DCB		CEY*SC*SAM		JBCG	CEY*SC	CEB*SC	CLPG	Presence of timer; CEY also used to backup trip
KD4, KD4, JBCG, SC, TD5	No	KD4*SC	KD4*SC*TD5		JGCG				Presence of timer and lack of pilot; distance elements are for backup tripping
CEYB, CLPG, SC, JBCG	DCB				JBCG	CEYB*SC	CEYB*SC	CLPG	Lack of timer; distance elements are for pilots only

Above: Examples of function assignment according to combinations of devices at a terminal

Commonwealth Edison - Introduction

- Commonwealth Edison is the largest electric utility in Illinois serving approximately 4 million customers in Chicago and Northern Illinois.
- Formed in 1907 from the consolidation of Chicago Edison and Commonwealth Electric.
- ComEd's transmission lines operate at 69kV, 138kV, 345kV, and 765kV
  - 90 miles of 765kV Transmission Lines
  - 2,468 miles of 345kV Transmission Lines
  - 2,708 miles of 138kV Transmission Lines
- All time summer peak load of 23,753MW
- The grandfather of the founder of SEL, Edmund O. Schweitzer, was an engineer at Commonwealth Edison who went on to cofound S&C Electric
- Commonwealth Edison initiated the effort to implement automation-based modeling tools primarily to assist with lessening the burden of PRC-027 coordination studies
- Also is planning to utilize this capability for protection performance studies (differentials and pilots are included in the protection)

Commonwealth Edison – Translation Table

- Like all organizations on this presentation, ComEd requires a Translation Table to match repository records to an appropriate location in the short-circuit model
- Maintenance of this translation table is a concern, as relays are switched out and lines are reconfigured
- ComEd opted to use a more precise set of identifiers to make this match, requiring the unique Relay ID from the repository.
  - This requires more maintenance (individual devices are tracked rather than all devices types at a location or just a location)
  - However, this can potentially help future updating processes
  - Track "date of modeling" on a per-device basis through the Relay ID, and compare against "date of update" in the repository; provides indication of what settings need to be updated in short-circuit model

SUB	RLID	VOLTAGE	EQUIPMENT	PACKAGE	DEVICE	FUNCTION	STATUS	FILE_DATE
Arizona	4068	230	Line 501	System_A	SEL-311C	11-A	Deployed	3/31/2021
Arizona	4068	230	Line 501	System_A	SEL-311C	11-A	Deployed	10/15/2020
Arizona	4068	230	Line 501	System_A	SEL-311C	11-A	Historical	4/5/2016
Arizona	4069	230	Line 501	System_B	SEL-421-5	11-B	Deployed	10/15/2020
Arizona	4069	230	Line 501	System_B	SEL-421-5	11-B	Historical	4/5/2016

Above: Example of repository data for relay devices. Note the highlight file date indicating a recent revision on March 31.

Repository Data		Short-Circuit Model Data			
RLID	VOLTAGE	FROM BUS	TO BUS	CKT	VOLTAGE
4068	230	8000	9120	1	230
4068	230	8000	9120	1	230
4068	230	8000	9120	1	230
4069	230	8000	9120	1	230
4069	230	8000	9120	1	230

Above: Example of translation table linking the Relay ID to a terminal definition.

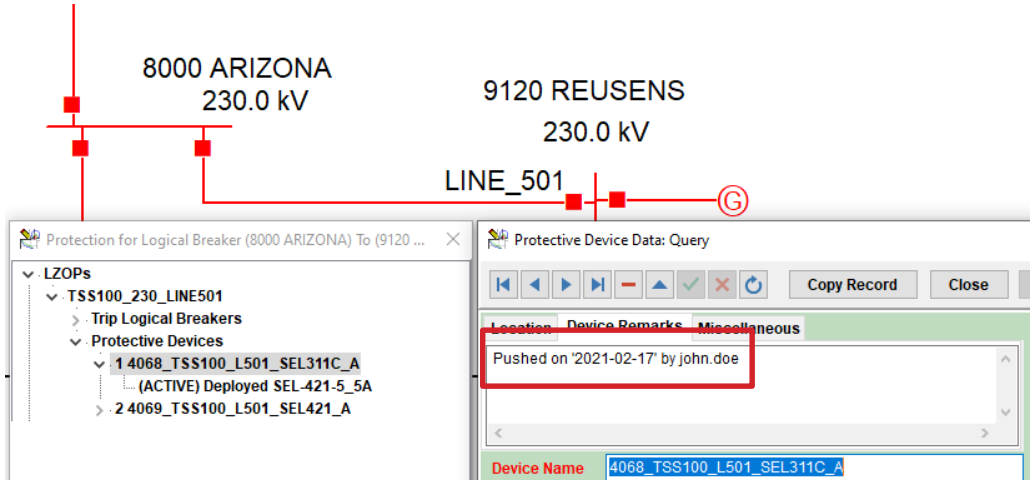

Above: Terminal in short-circuit model. Note the date on the relay device indicating a Feb.17 modeling date, which is older than the latest revision.

Commonwealth Edison – Communications Schemes

- ComEd elected to include Pilots and Transfer Trips within the modeling scope and tool capabilities
- Implementation of DCB required review of drawings to determine configuration:
  - What elements are initiating and blocking
  - What terminals are involved (including load tap transformers)
- Default DCB representation within short-circuit model was not sufficient due to non-directional element – modification needed to existing representation
- Transfer trips required careful consideration for Echo Configuration

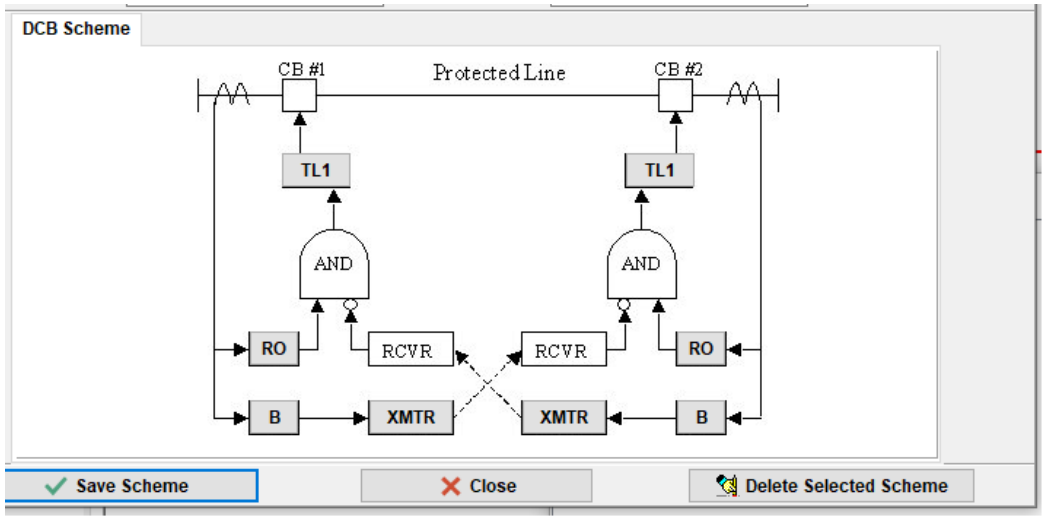

Above: Default DCB implementation in short-circuit model. Note that separate Start/Stop blocks are not supported by default. Tools were required to modify the default implementation during modeling to enable additional functions.

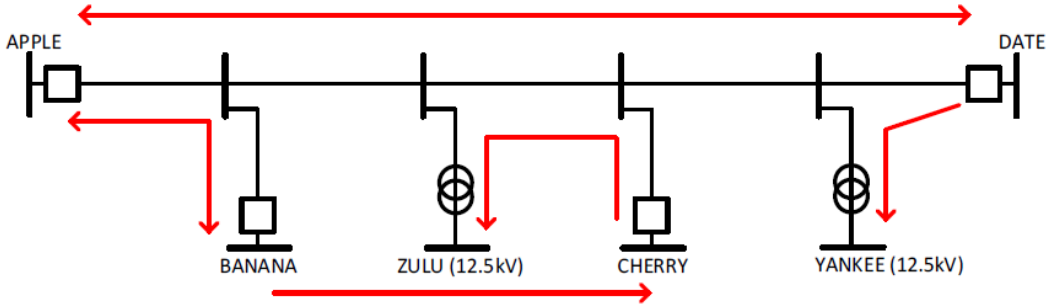

Above: ComEd preferred to have the capability to model extensive transfer trip schemes, such as the hypothetical example above

Commonwealth Edison – EDW and IT Security

- ComEd's relay settings repository is administered outside of the Protection Department
- Repository is subject to data security and access requirements
  - No external applications may connect to the production version ("main") of the database
  - An Electronic Data Warehouse (EDW) database replicating the production version was set up
  - What data to port over to allow tools to function, and what is frequency of update?
- Sensitive data in repository *and* setting files require heightened data security
  - User access control
  - Storage for "data-at-rest"

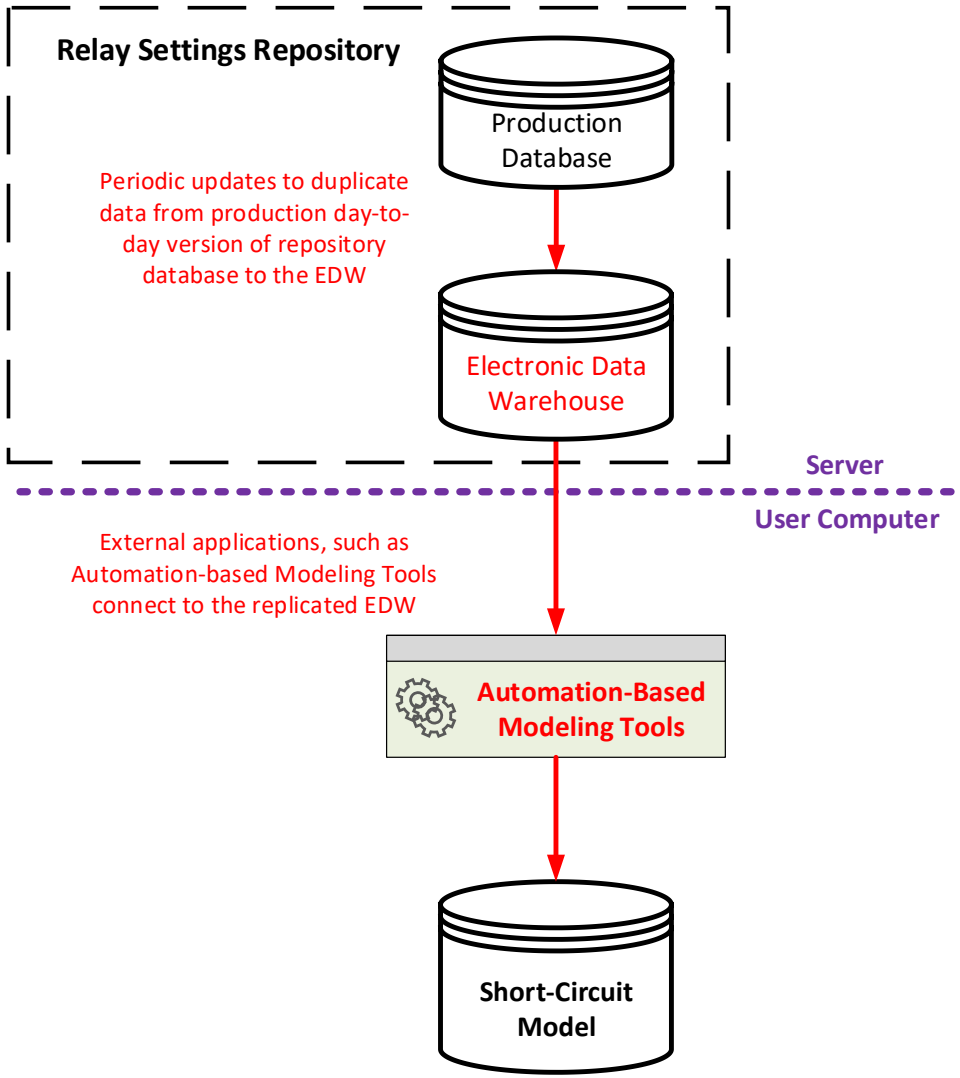

Pacific Gas & Electric – Introduction

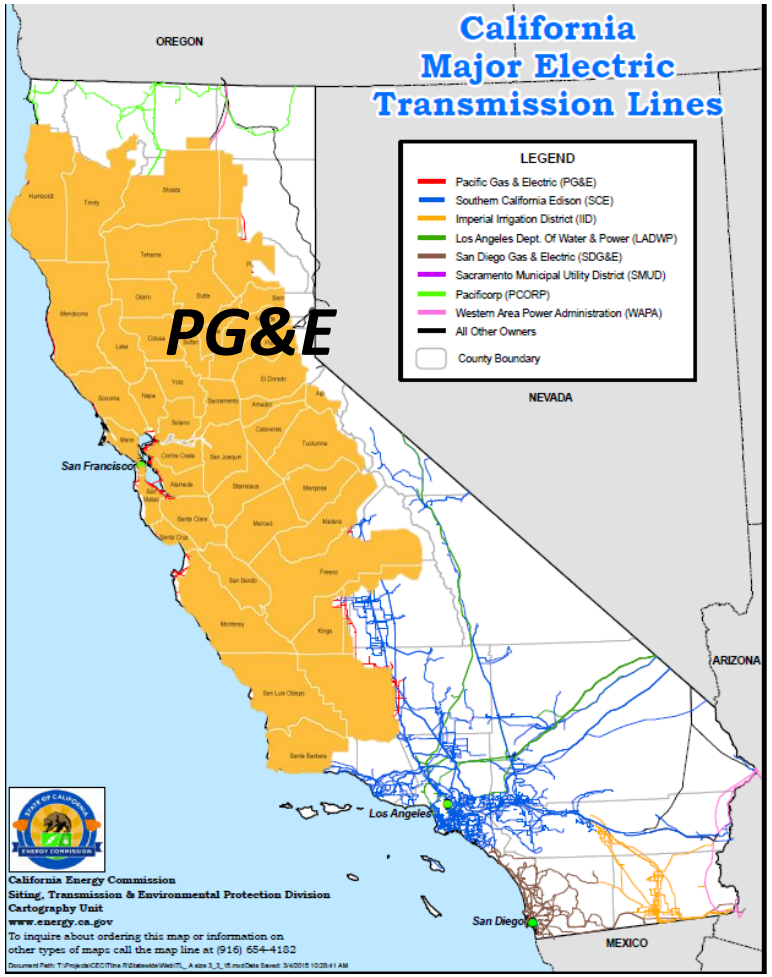

PG&E is a regulated public utility in northern California, U.S.A.

- Provides energy service to 5.4 million electric, 4.4 million natural gas customers
- Service area spans 70,000 square miles.
- Electric Lines: 106,000 miles of Distribution and 18,000 miles of Transmission
- 67 Hydroelectric Powerhouses
- Last Operating Nuclear Generator in CA. 2025 Decommission Date.
- 35,000 Protective Relays

System Protection at PG&E consists of approximately 50 protection engineers supporting 12kV through 500kV. Additional team members within System Protection support compliance, relay maintenance scheduling, and asset management.

Initiated the effort to implement automation-based modeling tools for PRC-027 coordination studies, to capture efficiencies in day-to-day work, and accelerate coordination studies for Public Safety Power Shutoff (PSPS) triggered by extreme fire risk weather events.

Pacific Gas & Electric – Data Integrity Concerns

- PG&E undertook extensive efforts to ensure data integrity within the relay settings repository and the short-circuit model
- Data cleanup effort was more significant than initially thought
- Processes in place to maintain data integrity going forward
  - Data scan "health reports" for both repository and short-circuit model
- Example:
  - More than one settings saved in a single setting file
- Bus classification one of the more prevalent data concerns from the short-circuit model
  - If "Tap Buses" are not defined correctly, the terminals on a line cannot be properly identified

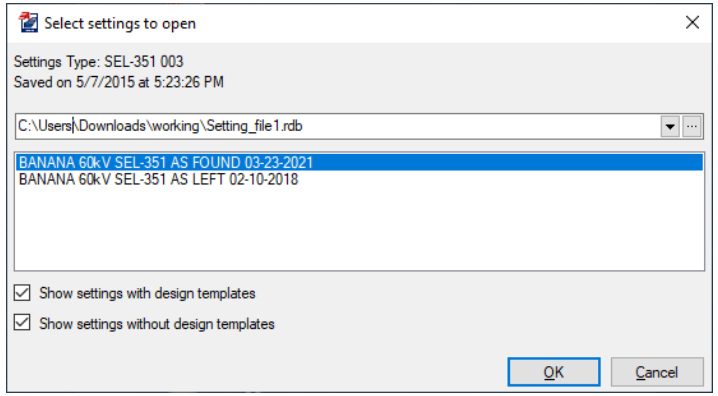

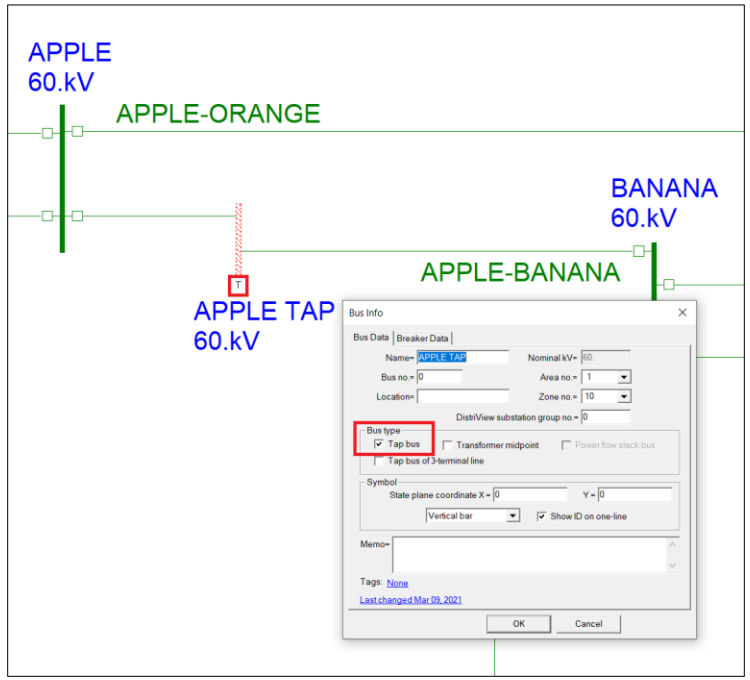

Updating the Short-Circuit "Basecase" Model

- **Coordinator** is responsible for refreshing settings in basecase monthly (push any setting changes from repository)
- Publish monthly basecase

Updating the Translation Table

- **Area Admins** are responsible for updating Translation Table
- Model (add/remove) relays in basecase using tools are necessary
- **Engineers** notify **Admins** to add/remove relays in basecase

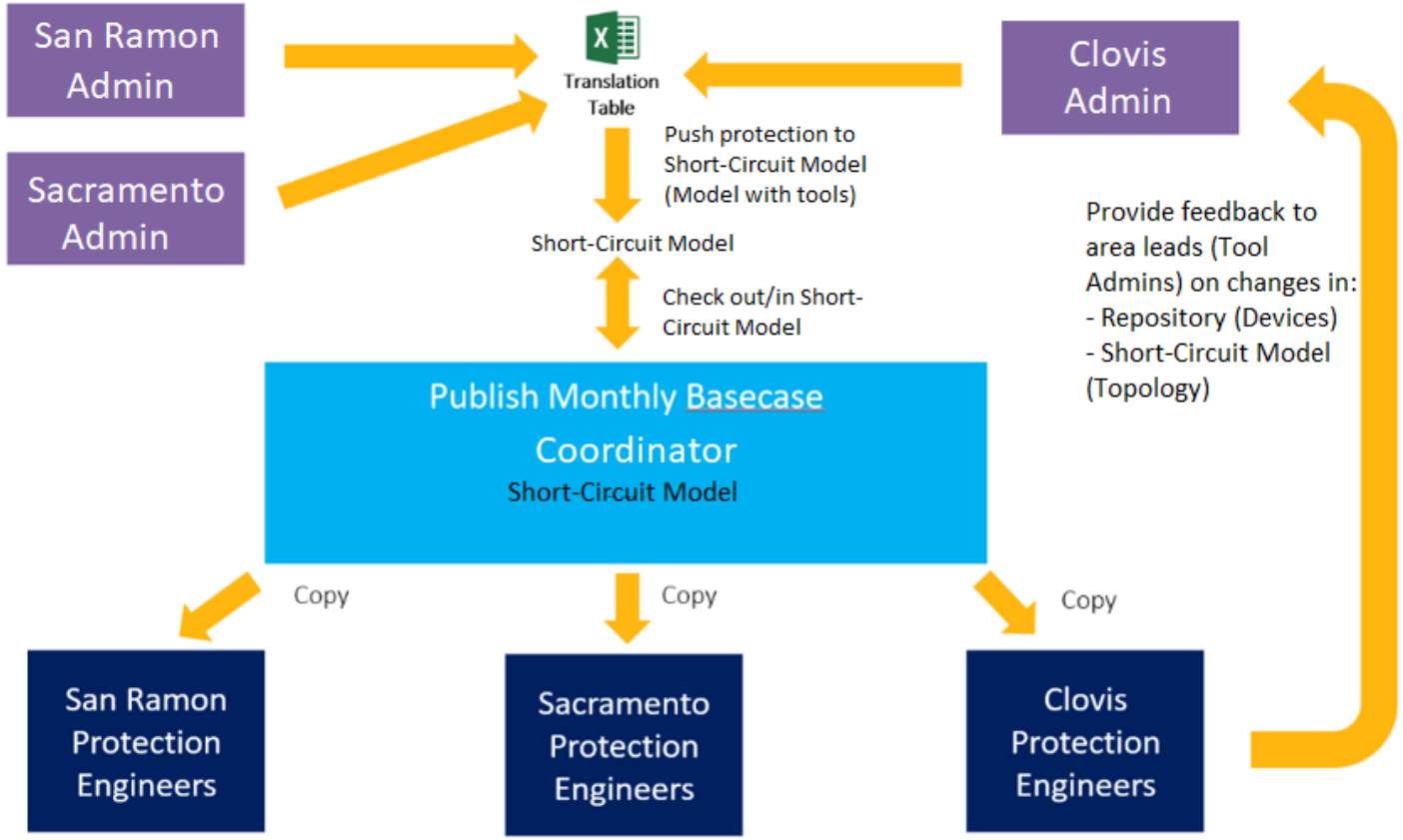

San Diego Gas & Electric® – Introduction

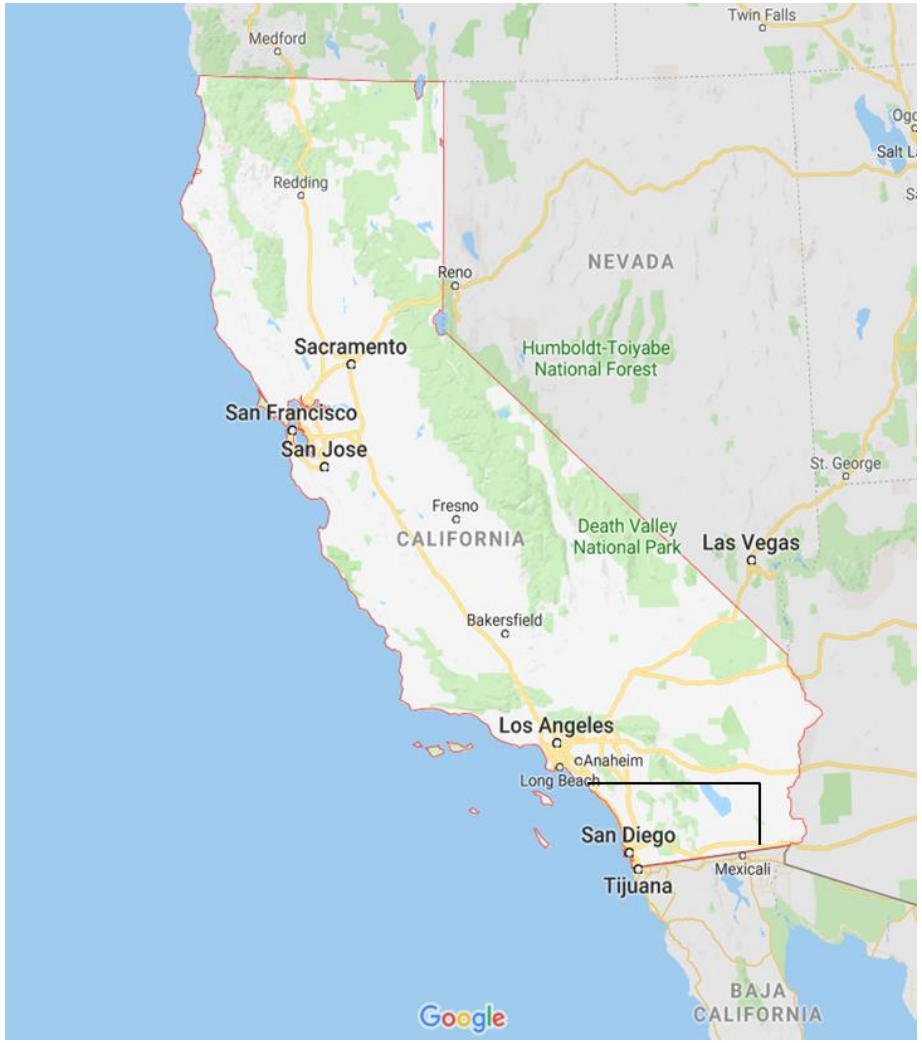

SDG&E® is a regulated public utility in southern California, U.S.A.

- Provides energy service to 3.6 million people through 1.46 million electric meters and 889,000 natural gas meters.
- Service area spans 4,100 square miles.

"SDG&E® is building the cleanest, safest, and most reliable energy infrastructure company in America."

- Approximately 45% of our electric load is supplied by renewable energy.
- Named "Best in the West" for electric reliability for 15 consecutive years.
- 2018 National Reliability Award Winner.

System Protection at SDG&E® supports these efforts by producing well designed protective relaying and control schemes, settings and communication systems resulting in a clean, safe, and reliable electric transmission and distribution system.

Updating the Short-Circuit Model

- **Admin** is responsible for refreshing settings in basecase monthly (push any setting changes from repository)
- Publish monthly basecase

Updating the Translation Table

- **Admin** is hosting monthly meetings with engineers and short circuit model owner to review/update the translation table
- Model (add/remove) relays in basecase using tools are necessary
- **Engineers** notify **Admins** to add/remove relays in basecase

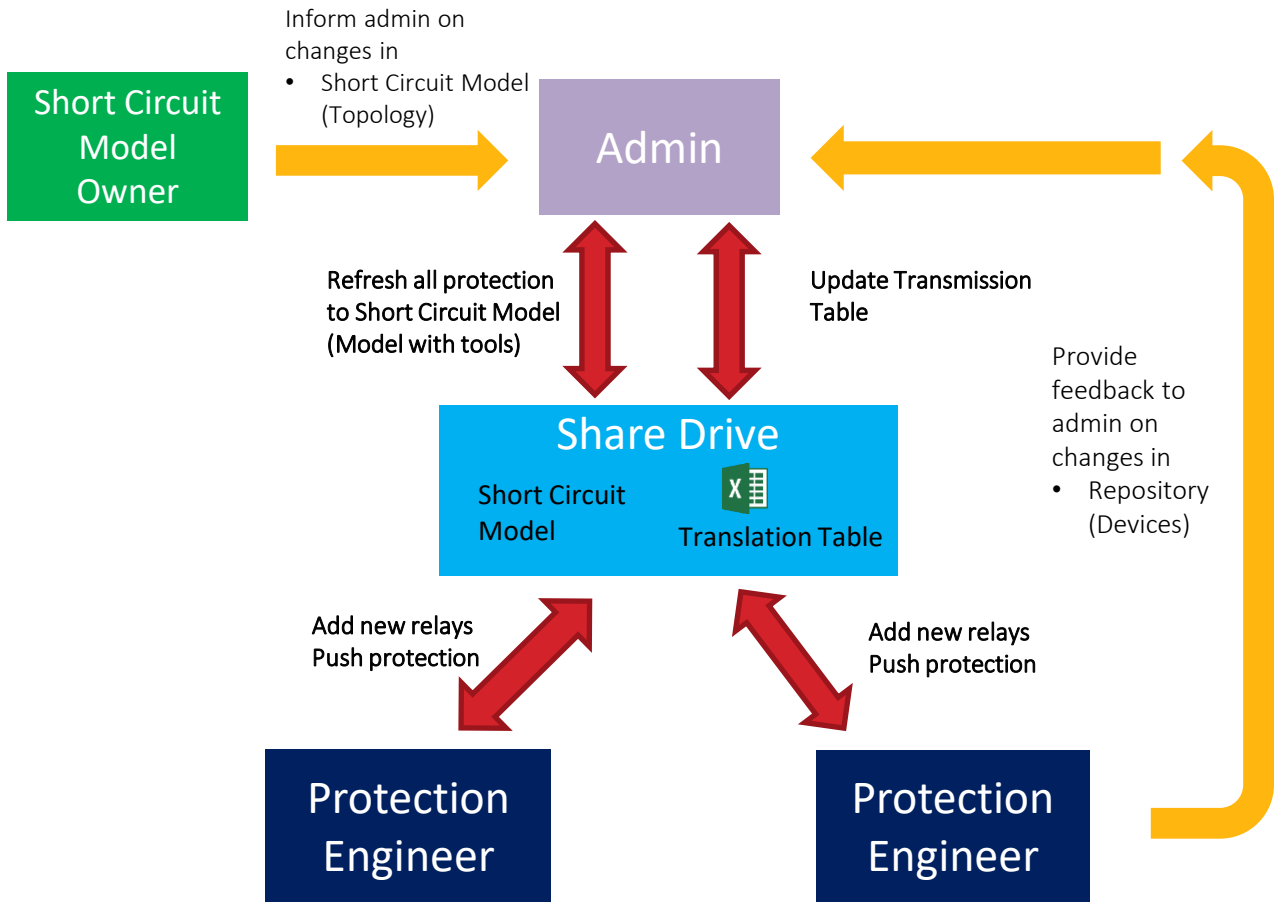

San Diego Gas & Electric® – Outcome

- Prior to implementing these automation-based tools, protection in short-circuit software was modeled manually.
- This barrier is no longer an issue and processes are being revised to leverage software simulation capabilities.
- Applications:
  - PRC-027 coordination studies
  - Engineers are encouraged to test relay settings during the development stage prior to issuance for peer review (or issuance for deployment)
- **Some relay settings concerns have already been identified through Wide-Area Coordination Studies made possible by this protection modeling**

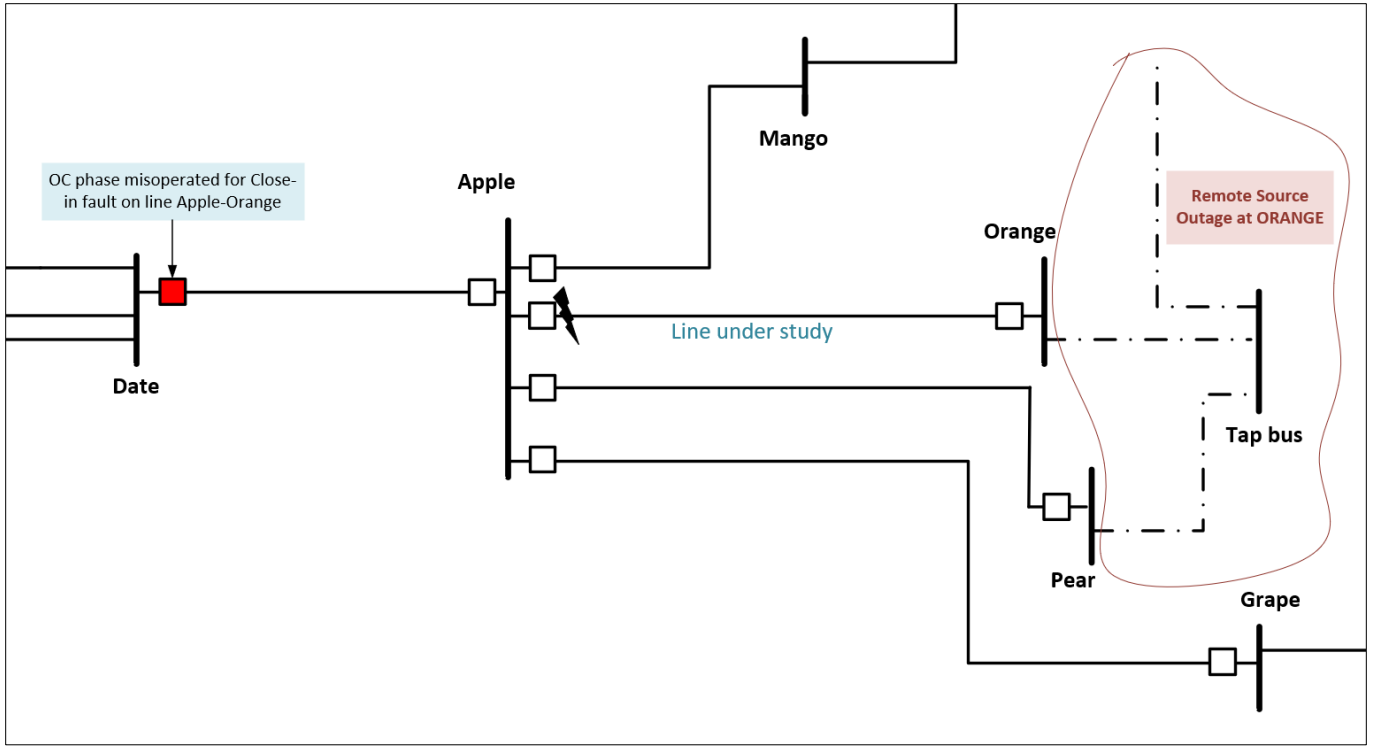

Thank you!