Application Considerations for Protecting Three-Terminal Transmission Lines

Robert Jimerson, *Oncor Electric Delivery*
Alex Hulen, Ritwik Chowdhury, Neeraj Karnik, and Bernard Matta, *Schweitzer Engineering Laboratories, Inc.*

***Abstract*—Three-terminal transmission lines pose protection challenges not encountered with more familiar two-terminal lines. Criteria for selecting protection element reach and pickup values require consideration of infeed and outfeed. Permissive overreaching transfer trip schemes can have dependability issues; whereas, directional comparison blocking schemes face both security and dependability challenges. A three-terminal line in Oncor Electric Delivery's power system is considered in this paper. Different topologies and contingencies affect infeed and outfeed levels, requiring careful selection of protection element settings and directional element polarizing quantities. Lessons learned are generalized so they may be applied to optimize security and dependability in any three-terminal line application.**

I. Introduction

Three-terminal line protection presents unique and complex challenges that are not encountered in applications with two-terminal lines. Three-terminal lines, unlike tapped lines, are characterized by the presence of sources or loads and line protection at all line terminals. The IEEE guide for transmission line protection [1] points to the consideration of current infeed and outfeed effects when protecting multi-terminal lines.

Current infeed is a condition where the current contribution from a line terminal can cause a distance relay to underreach [1] [2] [3]. The example system of Fig. 1 shows how current infeed from a relatively strong Terminal B can result in the apparent impedance measured at Terminal A to be 3.0 Ω for a fault that is 2.0 Ω away, as represented by (1). A higher calculated apparent impedance results in a distance relay underreach at Terminal A (and Terminal B). Section III of this paper provides application considerations when applying distance relays in three-terminal lines.

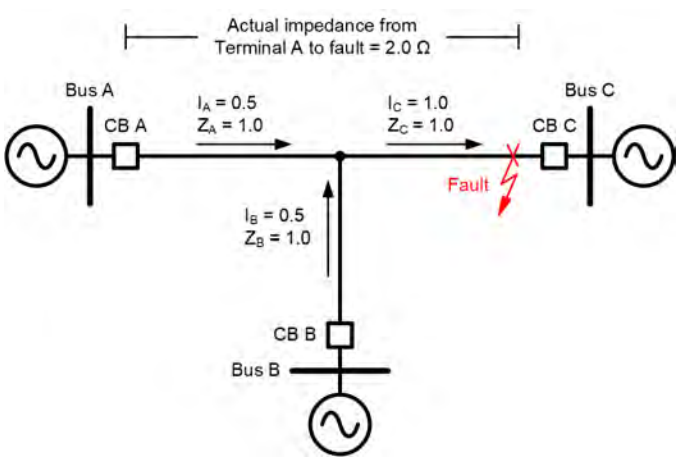

Fig. 1. Current infeed example at line Terminal A

$$\text{Apparent impedance} = \frac{E_A}{I_A} = \frac{(I_A \bullet Z_A) + (I_C \bullet Z_C)}{I_A} = 3.0\,\Omega \quad (1)$$

Current outfeed is a condition where, for an internal or external fault, current flows out of one or more line terminals from the protected line because of the impedances in the network and the load flow [1] [2] [3]. Current outfeed can result in both security and dependability issues, depending on the protection scheme and settings applied. This is explained in the following:

- A security issue may result from an external fault at Bus C (shown in Fig. 2) when using a directional comparison blocking (DCB) scheme that is configured based on commonly applied practices for a two-terminal line application where the overcurrent thresholds of the reverse directional elements at Terminal B and Terminal C fail to engage. Section IV provides an overview of these pilot schemes and Section V provides general setting adjustments that ensure secure protective relay behavior.
- A dependability issue may result where the Terminal B relay declares reverse for an internal fault near Bus C, shown in Fig. 3, resulting in a delayed or sequential trip. A sequential trip is a scenario where a relay cannot detect and trip for a line fault until at least one other terminal of the line has opened. Sequential tripping is described in more detail in Section III and Section VI. Section VI also discusses the dependability challenges faced by both permissive overreaching transfer trip (POTT) and DCB schemes. A further dependability concern arises for a breaker-failure scenario where a sequential trip may be further delayed [2]. Section VII discusses the issues and details of the impact on fault-clearing times due to a breaker-failure scenario.

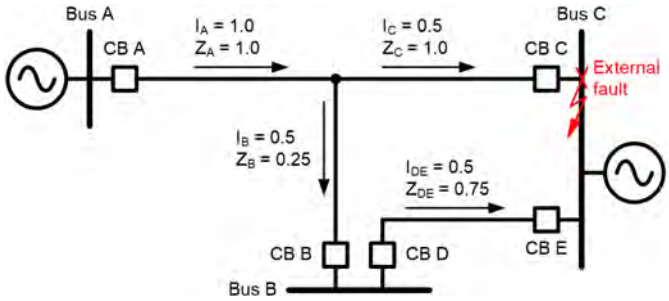

Fig. 2. Current outfeed at weak-terminal Bus B for an external fault

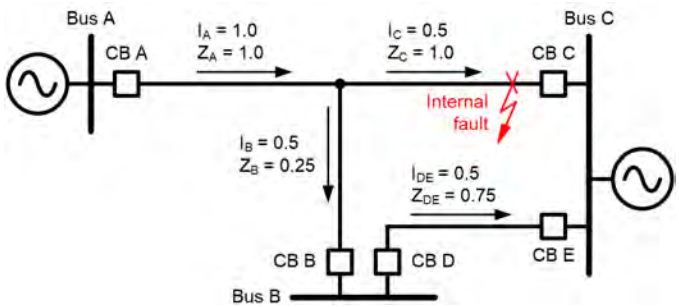

Fig. 3. Current outfeed at weak-terminal Bus B for an internal fault

Several factors influence the decision to configure a transmission line with three terminals, such as economics, constrained lead time, regulatory approvals, right-of-way availability, line overloads, and system performance requirements [2]. With the rapid penetration of inverter-based resources (IBRs), multi-terminal lines are increasing in popularity [4]. A line terminal supplied by an IBR often provides a strong zero-sequence path due to the transformer configuration but may behave as a weak positive-sequence and negative-sequence source, requiring application considerations [5] [6] [7] [8]. Section VIII shows how the choice of the directional element polarizing quantity may alleviate some protection challenges in a three-terminal line application.

This paper is based on a three-terminal line application in the Oncor system described in Section II. It discusses the unique challenges of three-terminal line protection and uses the Oncor system to identify some of the solutions applied. We then generalize the solutions so they may be applied to other systems to increase reliability in any three-terminal line application.

II. Oncor Three-Terminal Line System

Oncor Electric Delivery is a regulated electric distribution and transmission business that provides power to customers equaling about one-third the state of Texas' population via more than 139,000 miles of distribution and transmission lines. The Oncor service territory contains a sprawling combination of north central, east, and west Texas that includes high-growth areas in the Dallas-Fort Worth Metroplex as well as west Texas oil and gas commercial loads.

The Oncor transmission lines include a 345 kV bulk electric system backbone with a 138 kV load serving system, as well as some 69 kV lines. The 138 kV transmission lines are mainly composed of two-terminal lines, but there is also a subset of three-terminal lines. The three-terminal lines are mainly employed due to the limitations of substation breaker positions, land, and right-of-way, among other considerations.

Transmission lines in the Oncor system use redundant microprocessor-based relays to protect the line. The 138 kV and 345 kV lines have communications-assisted pilot protection mainly via DCB schemes, with a lesser proportion of POTT schemes and line current differential relaying. A combination of power line carrier (PLC) and direct fiber optics is used as pilot-scheme communications media in the Oncor system.

The 138 kV three-terminal line studied here is in a landlocked area of the Dallas-Fort Worth Metroplex Area with a unique configuration where several three-terminal lines exist to serve loads. This line uses a DCB scheme for pilot protection. As shown in Fig. 4, this line is connected between Bus A, Bus B, and Bus C (referred to as Line ABC hereafter). The impedance Z_{BC} represents the transfer impedance from Bus B to Bus C, comprises two parallel lines of varying lengths, and varies depending on the network state. Bus A comprises two 138 kV buses and is attached to a combustion unit generation station, typically only energized during peak loading. The two 138 kV buses at Bus A are normally connected via an autotransformer, but there is an operating constraint to separate the buses when more than one of the three combustion generation units are in service. Therefore, both configurations of Bus A must be considered when calculating relay settings for Line ABC.

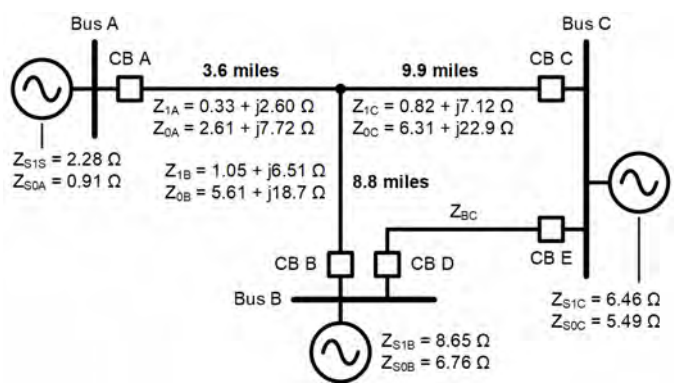

Fig. 4. Oncor three-terminal line impedances

Bus B borders the downtown city of Fort Worth distribution network system. The distribution network is connected to the 138 kV system via wye-delta-wye transformers where the low sides are tied together. This configuration produces a significant zero-sequence fault current contribution from all lines connected at Bus B. Lastly, Bus A, Bus B, and Bus C have other two- and three-terminal lines connected between them, which are not shown. This configuration produces a high amount of mutual coupling among all lines in this area. Fig. 4 shows the source impedances behind each terminal of the 138 kV Line ABC, with each source impedance based on a remote bus fault at the closer remote terminal bus with the other remote terminal breaker open to eliminate infeed/outfeed. It is evident that Bus A is a stronger source of fault currents in comparison to Bus B and Bus C. Additionally, it is located closer to the tap point of Line ABC. This paper will discuss challenges in setting protective relays for Line ABC.

III. Distance Zones in Three-Terminal Lines

Transmission lines are protected by distance elements in relays installed at all line terminals based on line-impedance data. Distance relay schemes may employ mho characteristics and separate zones, such as those shown on the R-X diagram in Fig. 5. Phase distance zones and ground distance zones are used in relay schemes for protection of the various fault types.

A. Traditional Two-Terminal Line Distance Element Considerations

The distance relays use an underreaching Zone 1 phase that is typically set to approximately 80 percent of the line impedance of a two-terminal line. Zone 1 ground is generally set at 80 percent of the smallest apparent impedance of the line under system contingencies, accounting for the effect of mutual coupling, which must be considered for ground faults. Zone 1 has instantaneous timing to trip the breakers for fast clearing of line faults. The underreaching nature of this zone is necessary due to possible inaccuracies in current transformers, relays, the short-circuit model, and to account for system transient effects.

Distance relays also use an overreaching Zone 2 to cover protection of the remaining portion of a two-terminal transmission line. The overreaching phase distance Zone 2 is typically set to 125 percent or more of the line impedance with a time delay of 20 to 30 cycles to coordinate with any distance zones exiting the remote-end terminal, as well as breaker-failure schemes of the remote bus. Ground distance Zone 2 is similarly set to 125 percent of the apparent impedance of the line with a similar time delay, considering the effect of mutual coupling. Zone 2 may also be used in pilot schemes, such as DCB and POTT, to obtain high-speed protection. Additional overreaching zones with larger reaches are sometimes employed for functions such as remote breaker-failure backup.

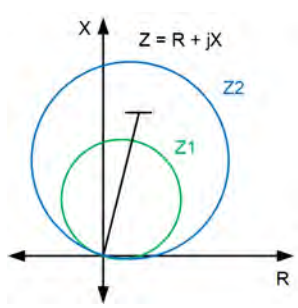

Fig. 5. R-X distance relay diagram

B. Three-Terminal Line Overreaching Distance Element Considerations

The distance zone principles for two-terminal lines can be applied to protect an entire three-terminal line. The addition of the third terminal introduces some challenges for setting the zones of protection. The three line sections connected to each terminal rarely have the same distance to the line tap point, so there is usually a short end and a long end of varying distance from the respective terminal being set. The overreaching Zone 2 on all three terminals must be set equal to or greater than 125 percent of its longest end line apparent impedance to maintain a fully dependable distance relaying scheme for a three-terminal line. Additionally, the effect of current infeed must be considered when setting the overreaching Zone 2.

As mentioned in Section I, the relative source strength of a terminal will introduce current infeed into the three-terminal line, thus adding to the apparent impedance detected by the other two terminals for line faults. When setting the distance relay at Terminal A (in Fig. 1), the relay setting engineer must consider both the line impedance from Terminal A to Terminal C and the apparent impedance resulting from current infeed from Terminal B for faults near Terminal C. The relay setting engineer should perform fault simulations of a line-end fault and a close-in fault at Terminal C with the terminal closed to obtain the maximum apparent impedance as detected by Terminal A for all internal faults. The line impedance from Terminal A to Terminal B must also be considered, as does the apparent impedance for faults near Terminal B from additional fault simulations. Simulations should be performed under various system contingencies and operation scenarios to determine the worst-case resulting apparent impedance. Terminals that experience outfeed may detect some internal faults near the remote terminals in the reverse direction, so the fault simulation contingencies should include separate remote terminal-open scenarios. This simulates a case where the remote Zone 1 instantaneous element trips the breaker, redistributing the fault current and allowing the local Zone 2 element to now detect the fault as forward. The overreaching Zone 2 of Terminal A may then be set above 125 percent of the greatest of these apparent impedances to fully protect the three-terminal line and address any underreaching concerns.

The effect of infeed in setting the Terminal C overreaching Zone 2 reach for Oncor Line ABC is shown in Fig. 6. C Zone 2_1 is shown in green, with a zone reach of 17.2 primary Ω based on a 125 percent multiple of the greater of the line impedances from Terminal C to Terminal A and from Terminal C to Terminal B, without considering the effect of infeed. Separate three-phase line-end faults are simulated in front of Terminal A and Terminal B, both with infeed from the other terminal and with the other terminal opened to eliminate infeed, for a total of four faults. Faults F1 and F2 are bolted line-end faults at Terminal A, with the Terminal B breaker open and closed, respectively. Faults F3 and F4 are the faults at Terminal B, with the Terminal A breaker open and closed, respectively. The effect of infeed on the apparent impedance at Terminal C is evident in the increase in impedance from F1 to F2, and especially from F3 to F4. The proposed C Zone 2_1 reach is sufficient to cover the faults F1, F2, and F3, but fault F4, an internal fault with infeed, is well outside the zone reach. C Zone 2_2, shown in blue, was created with a zone reach of 37.4 primary Ω based on 125 percent of the worst-case simulated apparent impedance for a line-end fault under an additional single contingency (not pictured) and has sufficient margin to cover faults F1 to F4. Line-end faults are considered because these result in the largest apparent impedances.

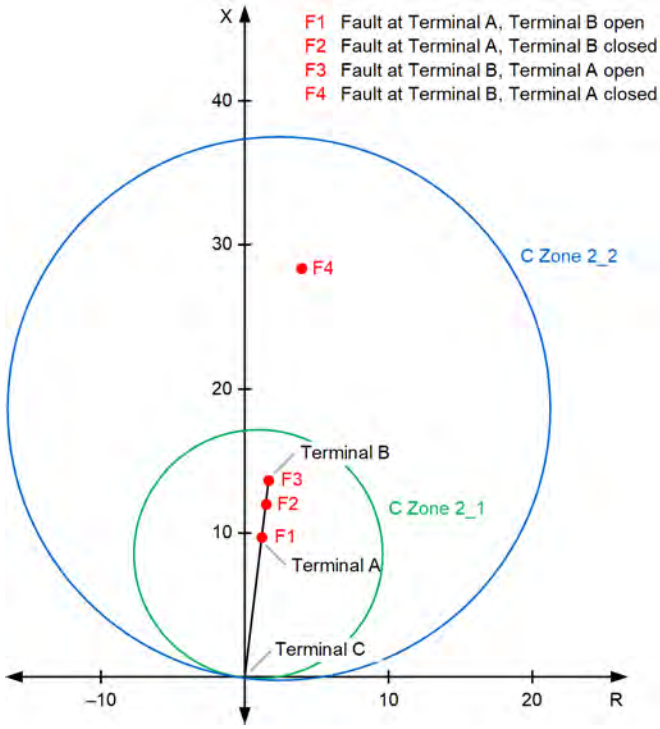

Fig. 6. Terminal C phase Zone 2 reach for line-end faults with and without infeed

The resulting overreaching Zone 2, considering the impedance of the longest end section and the apparent impedance from current infeed, can become quite large. The reach of Zone 2 must carefully be checked for coordination with all terminals exiting both remote terminal buses. The relay setting engineer should especially check relay coordination with relaying located at the closer terminal of the three-terminal line, although all coordination must be verified. Coordination issues were not exhibited in Oncor Line ABC, but the system shown in Fig. 7 provides an example. The Terminal C Zone 2 will overreach the Zone 1 of the remote relaying at Bus B, as the line section from Terminal C to Terminal B is the shorter of the two. In this case, the time delay of Terminal C Zone 2 must be set slower by an acceptable margin than that of the overlapping Zone 2 elements of the remote Bus B relaying to coordinate and obtain a selective system. Lastly, the relay setting engineer must verify that the fault current supplied during simulation will be enough to pick up the fault detectors for the distance Zone 2 to assert.

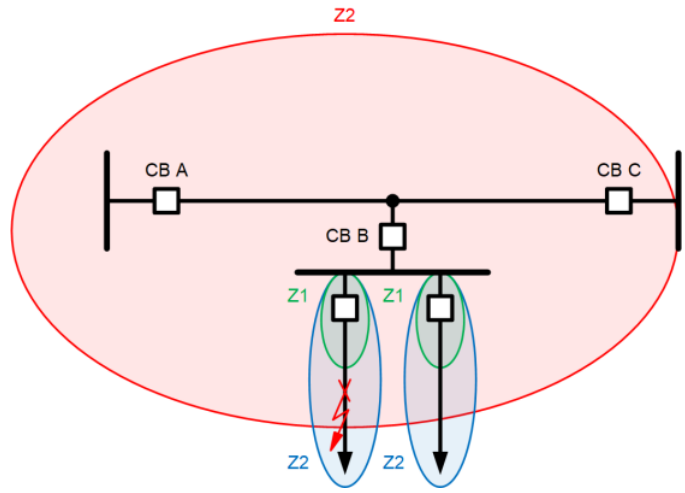

Fig. 7. Three-terminal line Zone 2 coordination

The potentially large reach of the overreaching Zone 2 in a three-terminal line system should prompt the relay setting engineer to check whether there are any line loadability concerns. According to the NERC PRC-023 standard [9], the phase protective relay element should not limit the loading capability of the transmission line. All phase distance zone elements must be evaluated at 0.85 per unit voltage and a power factor angle of 30 degrees to compare with the facility rating of the transmission line, as outlined by [10]:

> Set transmission line relays so they do not operate at or below 150% of the highest seasonal Facility Rating of a circuit, for the available defined loading duration nearest 4 hours (expressed in amperes).

$$Z_{RELAY\ 30} = \frac{0.85 \cdot V_{LL}}{\sqrt{3} \cdot 1.5 \cdot I_{RATING}} \tag{2}$$

where:

$Z_{RELAY\ 30}$ is the relay reach in primary Ω at a power factor angle of 30 degrees.

V_{LL} is the rated line-to-line voltage.

I_{RATING} is the facility rating.

The larger the mho distance zone reach, the less the loading of the line tolerated by the relay system, so this is an important check for overreaching zones in a three-terminal line. The use of the load encroachment feature available in many relays can help mitigate these loadability concerns. Load-encroachment settings define an impedance region for which it will block the phase distance zone element from operating. Reliance on load encroachment does have limitations. As explained in [11], the probability of the mho distance element tripping on volt-ampere reactive (VAR) flow during system disturbances increases as the mho distance element reach increases, even when load encroachment is applied. Maintaining adequate loadability as the reach of the mho element is increased beyond the value given in (2) requires judgment by engineers. Reach settings beyond 150 percent of the value of (2) should be scrutinized.

C. *Three-Terminal Line Underreaching Distance Element Considerations*

Underreaching Zone 1 elements applied to three-terminal lines must not overreach either remote end under any operating condition. Setting Zone 1 for 80 percent of the impedance to the closer remote terminal, with the third terminal open to remove infeed, may be sufficient for some three-terminal lines that will not experience outfeed [2]. However, in cases of lines with relatively weak sources at one or more terminals and strong system interconnections between terminals, the presence of current outfeed can cause relay distance elements to overreach. For the external fault at Bus C shown in Fig. 2, Zone 1 at Terminal A calculates an apparent impedance that includes the impedance to the tap point, plus the parallel impedances from the tap point through both remote terminals to the fault. This apparent impedance must be considered in selecting a secure reach for Zone 1 because the apparent impedance may be smaller than the line impedance to the closest terminal.

Consider Oncor's Line ABC shown in Fig. 4. When determining the Zone 1 phase distance reach for Terminal A, taking 80 percent of the lower of the impedances from Bus A to Bus B and from Bus A to Bus C, without considering outfeed, gives a reach of 7.37 primary Ω. Fig. 8 shows the Terminal A relay set with this 7.37 primary Ω reach as "Zone 1 Initial," in green, on an R-X diagram.

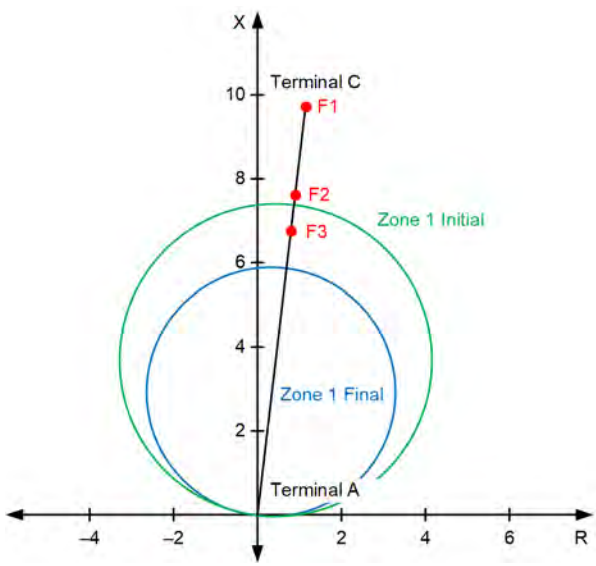

Fig. 8. Terminal A phase Zone 1 reach for remote bus faults

Three separate external faults are placed at Bus C under different conditions, plotted in Fig. 8, for which the Zone 1 element operation is not desirable. Fault F1 is a three-phase fault at Bus C, with the Terminal B breaker open, eliminating any outfeed. F1 plots at an apparent impedance of 9.79 primary Ω, well outside the zone reach. Fault F2 is a three-phase fault at Bus C under normal operating conditions with the breaker for Terminal B closed, with an apparent impedance of 7.64 primary Ω, just outside the zone reach, with an effective margin of 96 percent. For a fault F2 scenario, the relatively weak source at Bus B and the other system interconnections between Bus B and Bus C cause significant current outfeed at Terminal B, resulting in this reduced apparent impedance. As this simulated apparent impedance with outfeed is determined with less confidence than the line impedance, additional margin may be considered when the reach is set based on the apparent impedance, which makes this 96 percent margin insufficient. Fault F3 is a three-phase fault at Bus C, with the breaker at Terminal B closed, and a line outage at Bus B. This outage causes the already weak source at Bus B to weaken further, leading to greater current outfeed at Terminal B. The F3 apparent impedance maps at 6.85 primary Ω, which is within the initial 7.37 primary Ω Zone 1 reach. The "Zone 1 Final" reach of 6.00 primary Ω, 81 percent of the lowest apparent impedance, shown in blue in Fig. 8, was selected as the Zone 1 phase distance reach at Terminal A to address the simulated overreach in the presence of outfeed.

In addition to outfeed, mutual coupling with the line must be considered in setting ground distance elements. Differences in the sequence networks and mutual coupling can result in substantially different current distributions; thus, outfeed may occur under different conditions between phase and ground faults. A thorough study is necessary to account for these differences, and different reaches between phase and ground distance elements may result. For example, the Zone 1 ground distance element at Terminal A was set with a reach of 4.74 primary Ω, which is shorter than the 6.00 primary Ω reach used for the phase element.

Since underreaching zones must account for the impedance to the closer terminal, and may be further reduced for outfeed considerations, the resulting short zone reaches in certain line configurations could lead to a portion of the protected line that is not covered by any Zone 1 element. While this was not a concern on the Oncor Line ABC, the example line shown in Fig. 9 has a Zone 1 "blind spot," highlighted in yellow, due to the relatively long leg to Bus C. Pilot schemes employing overreaching elements, such as DCB and POTT schemes or current differential schemes, can be used to facilitate fast tripping for this portion of the line, but direct underreaching transfer trip (DUTT) and permissive underreaching transfer trip (PUTT) schemes should not be used because they employ underreaching zones, as discussed in Section VI.

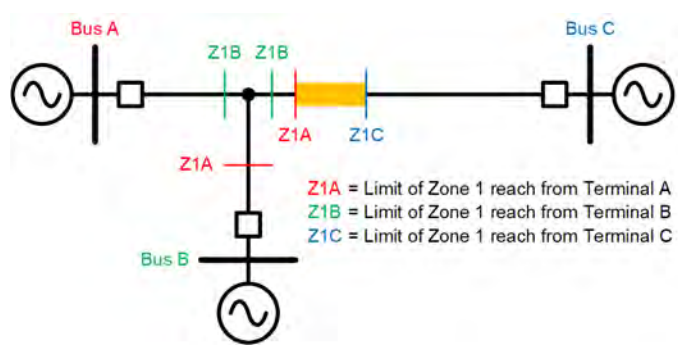

Fig. 9. Zone 1 blind spot (highlighted yellow) in a three-terminal line

Zone 1 elements play an important role in the protection of three-terminal lines with outfeed. During an outfeed scenario, one of the line terminals may detect an internal fault as reverse. Thus, to clear the fault in a timely manner, the Zone 1 element at one of the other terminals may have to trip to start the

sequential tripping of the internal fault. When the breaker opens, fault currents redistribute, allowing the terminal that previously detected the fault as reverse to detect it as forward and trip with its overreaching distance element. As described in Section VI.A, Zone 1 elements are also critical in the sequential tripping of internal faults via a pilot scheme. If there is a possibility of outfeed for a fault in the Zone 1 blind spot, the engineer should investigate whether the outfeed can be mitigated by choosing different polarizing quantities (see Section VIII.C) or consider applying current differential protection for the line.

D. Summary

Distance elements are liable to both underreach and overreach on three-terminal lines due to the presence of current infeed and outfeed, respectively. Therefore, overreaching elements must be set quite large, which can lead to remote coordination and loadability concerns. On the other hand, underreaching elements may have to be set relatively short, leading to potential Zone 1 blind spots. Comprehensive short-circuit model analysis of the protected line is essential to setting reliable distance zone reaches.

IV. Pilot Scheme Overview

Many DCB and POTT schemes use phase distance elements and either ground distance or directional ground overcurrent elements, or both, to provide high-speed protection for the entire line [1] [12] [13]. An overview of these schemes and their application to three-terminal lines is provided in the following.

A. DCB Scheme in Two-Terminal Lines

A brief overview of the DCB scheme for a two-terminal line is provided in Fig. 10 and Fig. 11. The pilot-tripping element at each terminal employs an overreaching forward distance zone or forward directional ground overcurrent element set to detect internal line faults with fault resistance. The pilot-blocking element is a reverse distance zone or a reverse directional ground overcurrent element that keys a block signal that is communicated to the remote end for external faults. The pilot-blocking elements are set to have a larger reach or lower pickup in primary A than the remote-end pilot-tripping elements. In some applications, an additional nondirectional element is used to provide a relatively fast key of the block signal. Note that the nondirectional elements are not discussed in this paper.

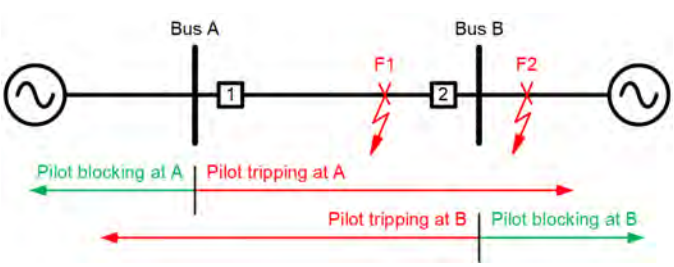

Fig. 10. Pilot-tripping and pilot-blocking zones in two-terminal lines

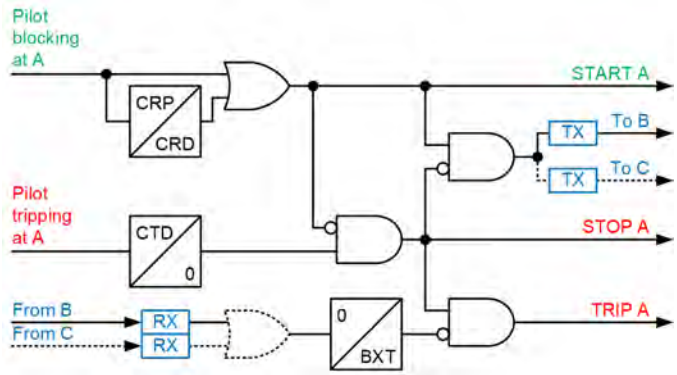

Fig. 11. Two- and three-terminal DCB scheme for a relay at Terminal A (relays at Terminal B and Terminal C are logically similar)

For a DCB implementation over a PLC channel, the START signal is provided to an on/off carrier transceiver to initiate a block signal transmission to the remote terminal. The STOP output to the carrier transceiver stops the block signal transmission and takes precedence over the START transceiver input. For DCB schemes over digital communications media, the TX logic in Fig. 11 is used to send a block signal. The TX logic has stop precedence.

Referring to Fig. 10 and Fig. 11, focusing on Terminal A, the DCB scheme behaves as follows. For fault F1 internal to the transmission line, the pilot-tripping element at Terminal A picks up, and after a short coordination time delay (CTD), trips after not receiving a block signal from the remote end. For a fault external to the line, such as F2, the reverse pilot-blocking element at Terminal B picks up and issues a block signal to Terminal A relaying. The pilot-tripping element at Terminal A may pick up, but the block signal is received before CTD times out, and the relay refrains from tripping. A block extension timer (BXT) is used to maintain the blocking for momentary gaps in the received signal due to communications channel issues like carrier holes.

The DCB scheme is considered very dependable [1] because it operates when no block signal is received, whether that is due to no block signal being issued or due to a communication failure.

DCB schemes typically include current reversal logic to accommodate sequential clearing operations on parallel transmission paths. For a fault near one terminal of a parallel line, the underreaching instantaneous elements at the near terminal may trip faster than the remote terminal relay elements. The resulting current reversal on the healthy protected line caused by this sequential clearing on the parallel line can result in a dropout of local reverse pilot-blocking elements prior to the dropout of remote pilot-tripping elements [1]. The current reversal dropout (CRD) delay timer shown in Fig. 11 is included to prevent undesired trips under this scenario by continuing the block signal for a period of time after the pilot-blocking element deasserts. The current reversal timer has a short current reversal pickup (CRP) timer that is typically one cycle to ensure an external fault has occurred before the CRD time is executed.

B. DCB Scheme in Three-Terminal Lines

The DCB scheme may be applied to a three-terminal line, as shown in Fig. 11, with the inclusion of the dotted portions. Pilot-tripping elements will be similarly employed in each line terminal relaying, though pilot-tripping distance elements must overreach both remote terminals and account for current infeed at the tap point, as discussed in Section III. The pilot-blocking elements must be set more sensitively than in the two-terminal application if outfeed is possible to achieve the desired security for external faults, which is expanded in Section V.

The DCB scheme tripping and blocking logic for a three-terminal line is very similar to that for a two-terminal line. Terminal A, Terminal B, and Terminal C trip for internal fault F3 in Fig. 12 after a delay of CTD and having not received a block signal. For external fault F4, Terminal A and Terminal B refrain from tripping after receiving a block signal from Terminal C. Note that a block signal from one terminal is sufficient to inhibit pilot tripping.

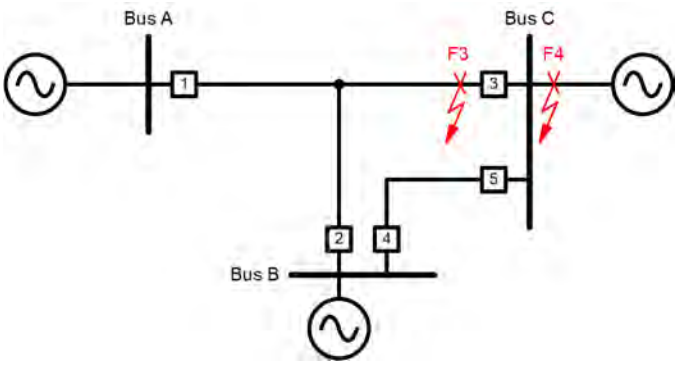

Fig. 12. Fault locations on a three-terminal line

C. POTT Scheme in Two-Terminal Lines

The two-terminal line POTT scheme employs pilot-tripping elements in the form of forward overreaching distance or directional overcurrent elements to send a permissive signal to the remote terminal and to trip the local breaker if a permissive signal is correspondingly received from the remote terminal. Reverse-looking distance or directional overcurrent elements are also included in the scheme as pilot-blocking elements used in current reversal logic [1] [12] [13]. Reference [13] discusses the use of these pilot-blocking elements in hybrid POTT scheme implementations for echo keying logic. The pilot-tripping and pilot-blocking zones are illustrated in Fig. 10.

The POTT scheme is illustrated in Fig. 13. The fault locations indicated in Fig. 10 show that for an internal fault F1 on the transmission line, the pilot-tripping element at Terminal A detects a forward fault and sends a permissive signal to Terminal B. The pilot-tripping element at Terminal B also detects the forward fault and sends a permissive signal to Terminal A. At both Terminal A and Terminal B, the pilot-tripping elements are picked up and a permissive signal is received; thus, both relays trip their respective breakers.

Now, a nearby external fault behind Terminal B, F2 in Fig. 10 is considered. The pilot-tripping element at Terminal A detects the fault in the forward direction and sends a permissive signal to Terminal B. At Terminal B, the fault appears in the reverse direction. Although the Terminal B relay receives the permissive signal from Terminal A, because the pilot-tripping elements do not assert, the relay will not trip for this external fault and no permissive signal is sent to Terminal A. At Terminal A, since no permissive signal was received from the remote end, the relay refrains from tripping under the POTT scheme logic.

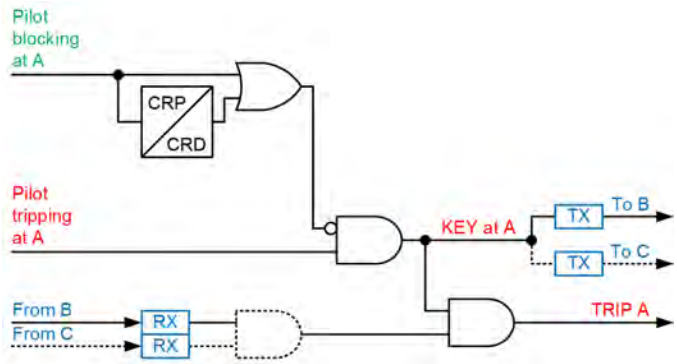

Fig. 13. Two- and three-terminal POTT scheme for a relay at Terminal A (relays at Terminal B and Terminal C are logically similar)

Current reversal logic, which is similar to the logic in DCB schemes, is employed to prevent a misoperation for a current reversal scenario. The pilot-blocking elements have a dropout timer to prevent tripping and keying the remote end following a reverse fault detection. The CRP and CRD delays are typically the same in POTT and DCB schemes. A POTT scheme is considered secure [1] because the scheme does not issue a trip when no permissive signal is received, whether that is due to no permissive signal being issued or due to a communications failure.

D. POTT Scheme in Three-Terminal Lines

The three-terminal POTT scheme application is an extension of the two-terminal scheme, as shown in Fig. 13, including the dotted portions. The differences are as follows:

- The forward distance or directional overcurrent pilot-tripping elements for a three-terminal line are set to overreach both remote terminals while accounting for current infeed at the tap point, as discussed in Section III.
- For the three-terminal POTT scheme, permissive signals are required from both remote terminals for the local terminal to issue a pilot trip.

The POTT scheme tripping logic for a three-terminal line is similar to that of a two-terminal line. The fault locations indicated in Fig. 12 show that Terminal A, Terminal B, and Terminal C trip for an internal fault F3 after receiving permissive signals from both of their respective remote terminals. For an external fault F4, Terminal A and Terminal B receive a permissive signal from each other, but refrain from tripping because no permissive signal is received from Terminal C. At Terminal C, though permissive signals are received from both remote terminals, no trip occurs because the fault is not detected by the pilot-tripping elements.

V. Pilot Scheme Security

DCB schemes may encounter security issues when applied to three-terminal lines if current outfeed is not accounted for. The security of directional ground overcurrent schemes and distance schemes are discussed in the following subsections. While the discussion in this section focuses on the DCB scheme, hybrid POTT schemes that employ reverse-looking pilot-blocking elements [13] face similar security concerns.

A. Security Challenges to Ground Overcurrent Element-Based Pilot Schemes Due to Outfeed

Pilot-tripping ground overcurrent pickups are set to detect internal faults under contingencies, with margin, for dependable operation. It is essential that a pilot-blocking element at a terminal detects all external faults that are within the reach or sensitivity of the pilot-tripping elements at the other terminals. Fig. 14 shows the zero-sequence impedance network for a two-terminal line, neglecting zero-sequence charging capacitance. Both relays measure the same zero-sequence current for an external fault; therefore, setting the Terminal B blocking element pickup below the Terminal A tripping element pickup ensures the blocking element picks up for all external faults that are within the sensitivity of the tripping element. The setting criterion in (3) is applicable, where $32F50_A$ is the forward pilot-tripping ground overcurrent pickup at Terminal A, $32R50_B$ is the reverse pilot-blocking ground overcurrent pickup at Terminal B, and k_1 provides a margin typically chosen between 1.25 to 2.0. Values are calculated in primary A to account for any difference in current transformer ratios at the terminals. The pilot-tripping element pickups may be set differently at the two terminals, so (3) is applied separately to determine the respective pilot-blocking element pickup for each terminal.

$$32F50_A > k_1 \bullet 32R50_B \tag{3}$$

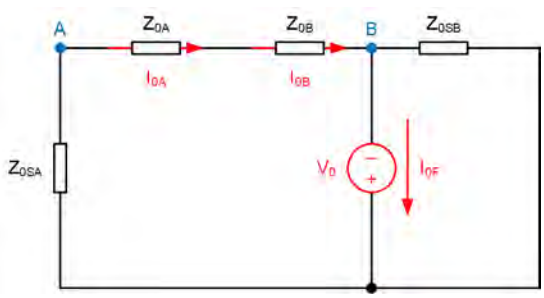

Fig. 14. Two-terminal zero-sequence impedance network for an external ground fault

The zero-sequence impedance network for a three-terminal line with no connections between the terminals, except for the line, is shown in Fig. 15. The setting criterion of (3) is effective for the system configuration because, for an external fault, the blocking element measures the additional contribution from the third terminal, making the blocking element even more sensitive relative to the tripping elements.

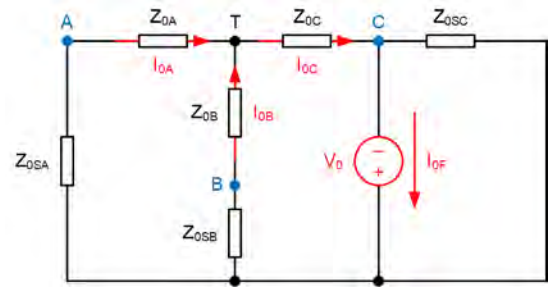

Fig. 15. Three-terminal zero-sequence impedance network for an external ground fault with infeed

Using (3) may lead to a loss of security when there is an outfeed condition due to an additional path between terminals, such as the path depicted by impedance Z_{BC} between Terminal B and Terminal C in Fig. 16. If the source at Terminal B is weak relative to the interconnection impedance between Bus B and Bus C, the currents detected by Terminal B and Terminal C may both flow out of the protected line. The current I_{0A} splits at the tap point T, flowing to the fault point at C via both paths Z_{0C} and $Z_{0B} + Z_{0BC}$, as I_{0C} and I_{0B}, respectively.

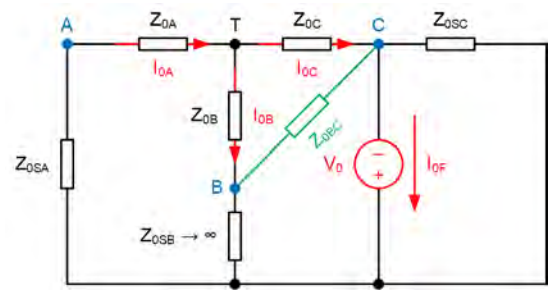

Fig. 16. Three-terminal zero-sequence impedance network for an external ground fault with outfeed

Consider the scenario of the three-terminal line of Fig. 16, where $Z_{0C} = Z_{0B} + Z_{0BC}$ and Z_{0SB} is an open circuit. In this case, $I_{0A} = I_{0B} + I_{0C}$ and $I_{0B} = I_{0C} = 0.5 \bullet I_{0A}$. If k_1 in (3) is less than 2, then an undesired pilot trip may be issued by the DCB scheme at Terminal A for this external fault case. Equation (3), which is used for two-terminal lines, is inadequate for secure operation in a three-terminal line application. A better setting criterion is given in (4), which accounts for the relative decrease in the current available for the pilot-blocking elements at Terminal B and Terminal C compared to that which is available for the pilot-tripping element at Terminal A.

$$32F50_A > 2 \bullet k_1 \bullet 32R50_{B,C} \tag{4}$$

Differing pilot-tripping thresholds may lead to different pilot-blocking thresholds at the terminals. When this applies, the worst-case scenario occurs when the ratio of the I_{0B} and I_{0C} magnitudes is equal to the ratio of pilot-blocking thresholds of the two terminals, $32R50_B : 32R50_C$. This leads to the application of (5), a more general form of (4), where the two remote pilot-blocking thresholds, $32R50_{R1}$ and $32R50_{R2}$, may differ, and where $32F50_L$ is the local pilot-tripping threshold. It is important to ensure that (5) is satisfied for all three terminals.

$$32F50_L > k_1 \bullet \left(32R50_{R1} + 32R50_{R2}\right) \tag{5}$$

The application of these additional three-terminal line specific margins is demonstrated in the Oncor Line ABC. For a single line-to-ground fault nearby on an outgoing line from Bus C, the fault currents detected by each terminal relaying are listed in Table I, as well as each relaying directional element assertion.

TABLE I
CURRENTS FOR A SIMULATED FAULT BEHIND BUS C

Terminal	3I0 Current (Primary A)	Directional Assertion
A	758.8 ∠ 0.0°*	F
B	418.3 ∠ 179.7°	R
C	340.2 ∠ –179.7°	R

* Terminal A 3I0 relay current is taken as the angle reference.

Terminal A has a ground overcurrent pilot-tripping pickup of 752 primary A. Using the two-terminal typical approach to set the pilot-blocking pickup settings at Terminal B and Terminal C with (3) and a k_1 value of 1.5, a setting of 500 primary A would meet that criterion. According to Table I, there is sufficient current at Terminal A to assert the pilot-tripping element, but due to the current outfeed distribution, neither Terminal B nor Terminal C has sufficient fault current to assert their respective pilot-blocking elements, despite a reverse directional assertion. These pilot-blocking settings would not be secure for this outfeed scenario. The application of (4) with the same k_1 value of 1.5 results in a pilot-blocking pickup of 250 primary A at Terminal B and Terminal C. According to Table I, there is more than 250 A of fault current available at Terminal B and Terminal C, which is sufficient, with margin, for each terminal pilot-blocking element to assert and issue a block to the remote terminals. The (4), and thus (5), setting criteria are sufficient for secure operation for this simulated external fault scenario with outfeed.

B. Security Challenges to Distance Element-Based Pilot Schemes Due to Outfeed

Pilot-tripping distance elements are set to overreach both remote terminals when considering infeed. The reach of these distance zones can become quite large, well above two times the line impedance to the farther terminal in some cases. It is imperative that the pilot-blocking distance element reach at each terminal is set appropriately to account for large overreaches of the tripping elements.

The approach used by Oncor to set the local reverse pilot-blocking distance element reach in the two-terminal line application is to set the reach above a multiple of the remote pilot-tripping distance element reach, minus the line impedance, such as in (6), which ensures sufficient margin for the remote pilot-tripping distance element overreach of the line. Another commonly used approach is to set ZR_L equal to or greater than ZF_R, where at least Z_{LINE} is the coordination margin.

$$ZR_L > k_2 \bullet ZF_R - Z_{LINE} \tag{6}$$

where:

ZR_L is the reach of the local blocking element.

k_2 is typically a value 1.5 or greater.

ZF_R is the reach of the remote tripping element.

Z_{LINE} is the line impedance.

A straight application of the approach used by Oncor to a three-terminal line presents some problems, the first of which is the ambiguity of the "line impedance." Additionally, the margin provided by the multiple k_2 in (6) is reduced when there is outfeed. Consider the three-terminal line in Fig. 17, where there is a strong connection between Terminal B and Terminal C. For an external fault at Bus C, Terminal B experiences outfeed, and the apparent impedance at Terminal A is given by (7). Given $I_C < I_A$ for an outfeed scenario, the calculated apparent impedance is less than the actual impedance, $Z_A + Z_C$, causing an overreach as the relay perceives the fault as closer than it really is.

$$Z_{APPARENT} = Z_A + \frac{I_C}{I_A} \bullet Z_C \tag{7}$$

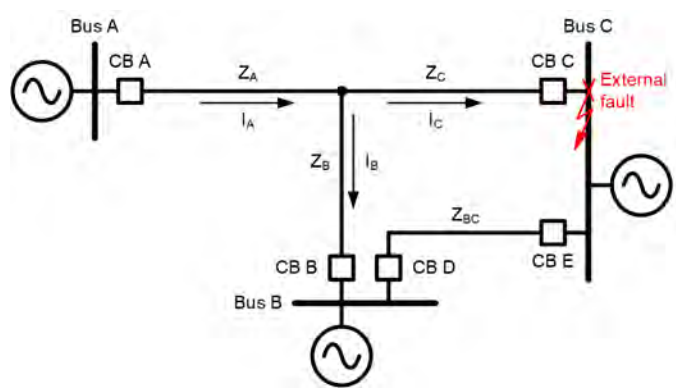

Fig. 17. Three-terminal external fault with outfeed

The worst-case element overreach for an outfeed scenario occurs when the apparent impedance is minimized for an external fault, which will occur in the theoretical case where Z_{BC} goes to zero. In this case, a fault at Bus C electrically becomes a fault at Bus B, and the apparent impedance to the fault can be simplified to the sum of Z_A and the impedances Z_B and Z_C in parallel, given in (8).

$$Z_{APPARENT} = Z_A + \frac{Z_B \bullet Z_C}{Z_B + Z_C} \tag{8}$$

This minimum apparent impedance can be used as a substitute for the line impedance in applying the typical two-terminal approach to setting the pilot-blocking distance element reach (6) for a three-terminal line application. Substituting, the pilot-blocking reach at Terminal A would be set to satisfy (9), with the terms calculated in (10) and (11).

$$ZR_A \geq \max\left(ZR_{AB}, ZR_{AC}\right) \tag{9}$$

$$ZR_{AB} = k_2 \bullet ZF_B - \left(Z_B + \frac{Z_A \bullet Z_C}{Z_A + Z_C}\right) \tag{10}$$

$$ZR_{AC} = k_2 \bullet ZF_C - \left(Z_C + \frac{Z_A \bullet Z_B}{Z_A + Z_B} \right) \quad (11)$$

If the reverse blocking element also provides backup protection (as is the case for Oncor), or if loadability is a concern when using (9), lesser reaches that still provide proper coverage of the tripping elements overreaches can be found by taking into account the actual impedance, Z_{BC}, or by using short-circuit study programs.

For the Oncor Line ABC, the outfeed phenomenon was observed for a three-phase fault occurring nearby on one of the lines connecting Bus C. Fig. 18 shows the phase pilot-tripping zone at Terminal A (in green) and two potential phase pilot-blocking zones at Terminal C. The C Pilot Block 1 zone (in blue) is generated by (6) using the impedance from Bus C to the tap point to Bus A as Z_{LINE}, while the C Pilot Block 2 zone (in black) is generated by (9), regardless of the Terminal B pilot-tripping reach for demonstration purposes, both using a k_2 multiple of 1.5. The simulated fault with the open breaker (no outfeed) at Terminal B is plotted on the R-X diagram in Fig. 18 as points F1A and F1C, and the fault for normal operation (with outfeed) at Terminal B is plotted as points F2A and F2C, where F*n*A faults are mapped apparent impedances as detected by the Terminal A relay and F*n*C faults are the apparent impedances as detected by the Terminal C relay.

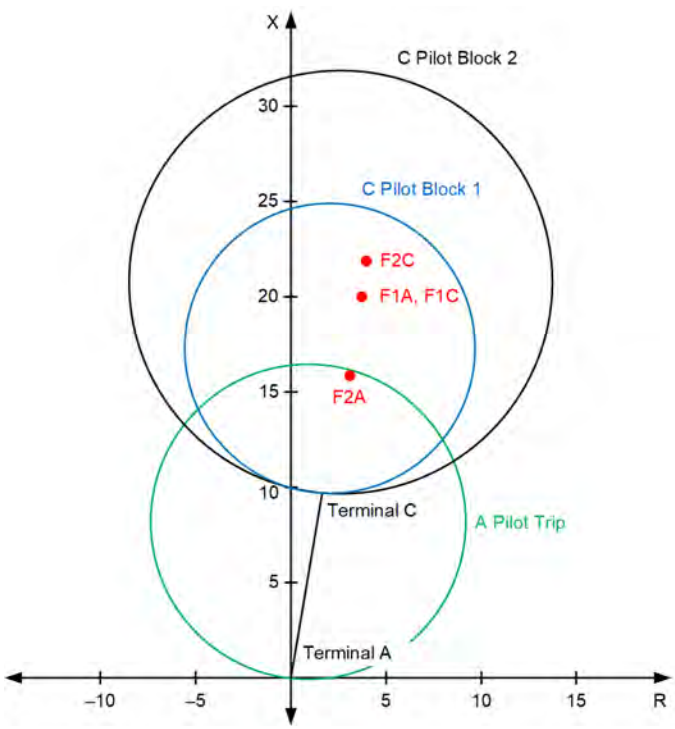

Fig. 18. Terminal A pilot-tripping and Terminal C pilot-blocking coordination for external Bus C three-phase faults

F1C is within both pilot-blocking zones and F1A is well outside the Terminal A pilot-tripping zone for the no-outfeed scenario. However, for a fault at this same location, but with outfeed at Terminal B, F2A plots within the pilot-tripping zone at Terminal A. While F2C does plot within both pilot-blocking zones at Terminal C, the fault is somewhat close to the C Pilot Block 1 zone boundary, coming in at 12.25 primary Ω of the C Pilot Block 1 reach of 14.96 primary Ω, a margin of 122 percent. It is worth reiterating that these distance element reaches are based on the less accurate simulated apparent impedances rather than known line impedances; thus, this 122 percent margin is insufficient. However, the C Pilot Block 2 reach of 22.10 primary Ω provides adequate margin at 180 percent of the F2C fault apparent impedance and was selected for the pilot-blocking distance element reach.

C. Summary

Traditional methods of setting pilot-scheme blocking elements for two-terminal lines could fail to provide adequate security for three-terminal line applications. With the presence of outfeed, one terminal may detect significantly more current flowing into the line than the other two terminals detect flowing out of the line, requiring greater pickup margins between pilot-tripping and blocking overcurrent elements. Distance pilot-tripping elements overreach more in the presence of outfeed, necessitating greater margin to be built into the reverse pilot-blocking distance element reach. The approaches discussed in this section to set the pilot-blocking elements at each terminal of a three-terminal line provide sufficient margin for secure scheme operation.

VI. Pilot Scheme Dependability

A reasonable follow-up to the security problem explained in the previous section is to ask, "What happens when a fault with outfeed is moved internal to the line?" The answer is that the presence of current outfeed during an internal fault presents a dependability challenge for both DCB and POTT schemes, whereby an internal fault is interpreted as an external fault by one of the line terminals.

A. Dependability Challenges to Pilot Schemes Due to Outfeed

The presence of outfeed at any terminal of a three-terminal line may impact the dependability for internal faults for both DCB and POTT schemes.

A three-phase fault at location F3 in Fig. 12 on the Oncor Line ABC demonstrates the impact of outfeed on the dependability of line protection. Terminal B exhibits outfeed for a fault at this location. Focusing on the DCB scheme for the three-terminal line, it is evident that pilot-tripping elements at Terminal A and Terminal C assert for the internal fault, as shown in Fig. 19. The phase pilot-tripping elements are shown for each relay, with the Terminal A element plotted at the origin and the Terminal B and Terminal C elements reversed and offset by their respective line impedance from Terminal A. The apparent impedance each relay calculates for the fault F3 is shown with the appropriate terminal letter appended. However, relays at Terminal B make a reverse directional decision, as well as a pilot-blocking element assertion. As Terminal A and Terminal C receive a block signal from Terminal B, DCB scheme operation is inhibited, and the dependability is adversely impacted for an internal fault.

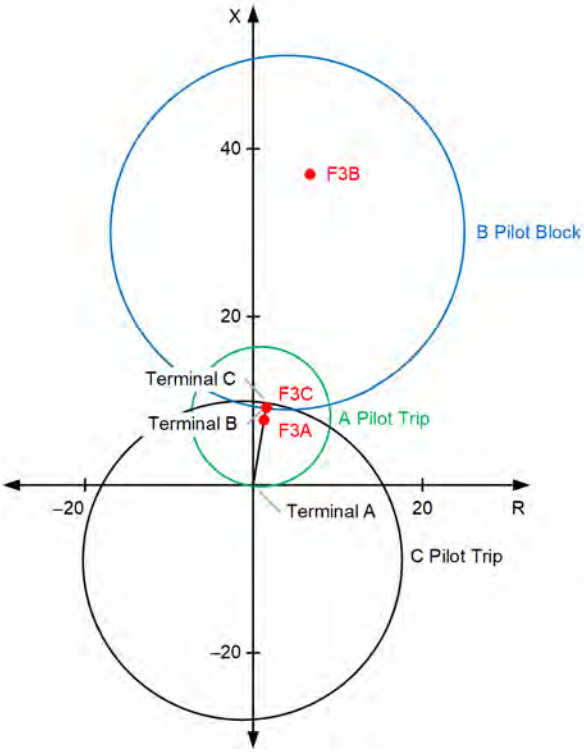

Fig. 19. Relay apparent impedances for 3LG Fault F3 on Oncor Line ABC

Dependability would also be challenged if the line were to employ the security-biased POTT scheme instead of the dependability-biased DCB scheme. In the POTT case, Terminal A and Terminal C assert their respective pilot-tripping elements and receive permissive trip signals from each other. However, because a permissive signal is not received from Terminal B, the POTT scheme does not operate.

It is evident that the presence of outfeed for an internal fault on Line ABC prevents fast fault clearing via a DCB or a POTT scheme. Instead, sequential tripping of the line terminals must be relied on. The sequence of operations for fault F3 is initiated by the tripping of Terminal C, which is closest to the fault, via the underreaching Zone 1 element. Circuit breakers at Terminal C require time (typically 2 to 3 cycles) to open after the Zone 1 element issues a trip. After Terminal C opens, current at Terminal B reverses, the relaying detects a forward fault, and its pilot-tripping elements assert. If a DCB scheme is used, Terminal B does not immediately stop issuing a block signal to Terminal A, but it instead maintains the block signal until the CRD in Fig. 11 expires. Further, the BXT at Terminal A must expire after the block signal from Terminal B stops. In PLC applications, Terminal B may receive its own block signal and be delayed by BXT as well. After these timers expire, the DCB scheme trips Terminal A and Terminal B because neither of the two currently receive a block signal.

Likewise, a POTT scheme also trips because Terminal A and Terminal B provide permissive trip signals to their respective remote terminals after the CRD timer at Terminal B expires. Note that the breaker at Terminal C has already opened. Therefore, echo logic is required for a POTT scheme so that Terminal C can echo the received permissive trip signal back to Terminal A and Terminal B [12] [13]. One option is the simplified open-breaker logic shown in Fig. 20, which can be built into the POTT scheme. A key point for a three-terminal line application is that a permissive signal from both of the other line terminals (Terminal A and Terminal B) must be received for the echo to be sent back. An alternative option is echo keying supervised by the relay not detecting a reverse fault with its pilot-blocking element, as shown in Fig. 21. This echo scheme typically employs the previously discussed current reversal logic for the pilot-blocking elements and an echo blocking delay (EBD) following the assertion of pilot-tripping elements [13].

Either echo logic employed at Terminal C increases the total fault clearing time. According to the open breaker echo logic in Fig. 20, after Terminal C opens and permissive signals from Terminal A and Terminal B are received, the echo time-delay pickup timer (ETDPU) must expire. Only after this timer expires does Terminal C echo the received permissive signals to both remote terminals. Regarding the pilot-blocking element supervised echo logic in Fig. 21, after the pilot-tripping elements stop asserting at Terminal C, the EBD timer must run out before the ETDPU timer starts timing with the receipt of permissive signals from both remote terminals. Because the breaker at Terminal C is open, the pilot-blocking element is not asserted after ETDPU expires, allowing Terminal C to echo-key to the remote terminals.

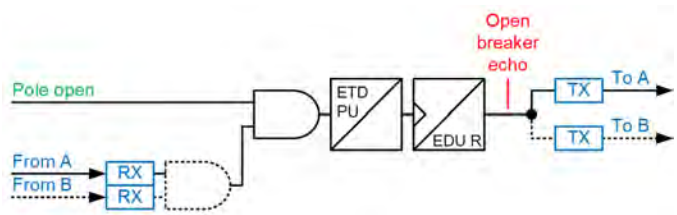

Fig. 20. Simplified open-breaker echo logic for a POTT scheme (Relay C)

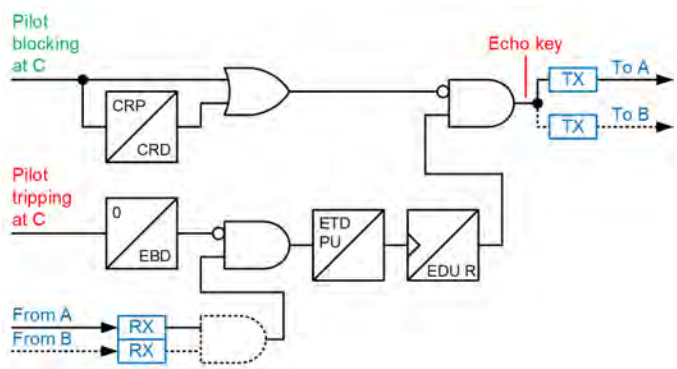

Fig. 21. Pilot-blocking element supervised echo logic for a POTT scheme (Relay C)

Reference [1] points out that a modification to the echo logic may be required during reclosing because when there is a permanent fault, both terminals must echo on receipt of only one signal. A simpler alternative is to rely on an instantaneous overreaching zone in the switch-on-to-fault logic to trip for a permanent fault instead of the pilot scheme.

Note that regardless of the pilot scheme employed, the underreaching Zone 1 element at the terminal closest to the fault initiates the sequential tripping. This highlights the significance

of Zone 1 in a three-terminal line with outfeed, without which, fault clearing would not be achieved via the pilot scheme and time-delayed tripping via backup Zone 2 or time-overcurrent elements would have to be relied upon. If there is a possibility of outfeed for a fault in the Zone 1 blind spot, alternatives such as choosing different polarizing quantities (see Section VIII.C) or using current differential protection should be considered.

To summarize, although the line-protection system eventually isolates the internal fault, presence of outfeed results in sequential tripping and a delay in fault clearing. This delay results from the limitation of the pilot scheme only clearing all terminals after Terminal C has opened so that current flow is redistributed, thereby eliminating outfeed. Fault clearing is further delayed if contingencies such as circuit-breaker failure occur at any line terminal (discussed in Section VII).

B. Solutions to Dependability Challenges Due to Outfeed

There are a few solutions to mitigate the dependability challenges for DCB and POTT schemes due to outfeed.

1) DUTT Scheme

A DUTT scheme presents a viable option to improve dependability. It is evident that the underreaching distance element (Zone 1) at Terminal C asserts for a fault at location F3 in Fig. 12. A DUTT scheme uses the Zone 1 assertion at Terminal C to key a transfer trip signal for Terminal A and Terminal B. These terminals are set to trip upon receipt of the transfer trip signal from Terminal C. As the DUTT scheme uses the underreaching zone of Terminal C to securely detect an internal fault, there is no supervision of the received transfer trip signal at Terminal A and Terminal B. Thus, the relay at Terminal B trips without additional delay, even though it identifies the fault in the reverse direction.

Three-terminal applications benefit from overlapping underreaching zones so that no portion of the line is left without coverage from at least one terminal, allowing the DUTT scheme to clear the fault from all line terminals. On the other hand, it is critical to ensure that underreaching zones do not overreach any remote terminal for all credible operating conditions and contingencies. These two objectives may not be met simultaneously on certain three-terminal lines, which makes the DUTT scheme ineffective for fast total line clearing for all faults in such cases.

It is important to emphasize that reliability of the communications channel is critical to ensuring dependable operation of the DUTT scheme. The DUTT scheme is similar to a traditional POTT scheme in this aspect. The transfer-trip signal may not reach remote terminals if the faulted line is used as a communications channel. Consequently, PLC channels may not be suitable for implementing a DUTT scheme.

2) PUTT Scheme

A PUTT scheme seeks to achieve a compromise between security and dependability. Like the DUTT scheme, the underreaching zones provide a permissive signal to the remote terminals. However, for added security, each remote terminal uses a forward overreaching zone to supervise the received permissive signal from either terminal. For example, in Fig. 12, a forward overreaching zone at Terminal A also asserts for a fault at location F3. Assertion of this overreaching zone, along with the permissive signal from Terminal C, is necessary for Terminal A to trip via the PUTT scheme. Note that receipt of a permissive signal from Terminal C alone is sufficient for tripping Terminal A via the PUTT scheme. This is possible because a PUTT scheme uses underreaching zones (which do not pick up for an external fault) to provide a permissive signal. This enhances dependability over a POTT scheme where receipt of permissive signals from both remote terminals (Terminal B and Terminal C) is required for tripping. Lastly, when a PUTT scheme is employed, Terminal B will not trip instantaneously because its overreaching zone does not assert when the fault is identified as reverse. It eventually trips via overreaching time-delayed elements after Terminal A and Terminal C have opened.

A PUTT scheme, therefore, provides improved performance over a DCB or a POTT scheme by achieving fast fault clearing at two terminals (Terminal A and Terminal C). In comparison, if a DCB or a POTT scheme is implemented, only Terminal C provides fast clearing via its underreaching Zone 1 elements. However, a PUTT scheme is unable to provide fast clearing at all three terminals (as with a DUTT scheme) due to local supervision of the received permissive signal. A PUTT scheme can be used to strike a balance between security and dependability requirements.

C. Weak-Terminal Tripping Considerations

A variation to an outfeed condition is the case where Terminal B does not exhibit outfeed for the fault close to Terminal C but is a weak source with insignificant fault current contribution so that its pilot-tripping elements do not assert. If a DCB scheme is employed for such a scenario, Terminal A and Terminal C trip as expected, but not Terminal B. In most cases, after Terminal A and Terminal C open, current redistribution occurs and Terminal B can trip via the pilot scheme. However, if Terminal B has no sources behind it, the terminal will not trip. A POTT scheme with weak infeed logic [12] [13] may provide better dependability for such cases. In the case of this scheme, Terminal B echoes the received permissive signals to Terminal A and Terminal C, as shown in Fig. 20 and Fig. 21, which allows them to trip via the POTT scheme. Additionally, Terminal B converts the echo signal to trip via the weak infeed logic. This logic typically employs supervision via phase-to-phase undervoltage and residual overvoltage elements. These elements assert at Terminal B during a fault condition, thereby permitting echo-to-trip conversion, which, in turn, opens Terminal B. It is noteworthy that a DUTT scheme may also provide dependable operation during a weak infeed condition.

D. Summary

The outfeed effect and presence of weak terminals have a significant impact on the dependability of pilot protection schemes on three-terminal lines. Schemes that are traditionally deemed dependable for two-terminal lines, such as DCB schemes, may not always retain the same characteristics in three-terminal applications. Careful analysis of network topologies, credible operating conditions, and verification using short-circuit programs are necessary to ensure that three-

terminal lines are dependably protected. Less-commonly applied schemes such as DUTT or PUTT schemes may need to be evaluated based on the application. As discussed in Section VIII, other options may include using different operating principles to mitigate an outfeed or weak-terminal issue.

VII. Breaker Failure Considerations

The delay in clearing internal faults until outfeed is removed is worsened if a breaker fails to interrupt current. The longer fault-clearing time results because the current reversal logic maintains a pilot-blocking signal or prevents permissive keying until the outfeed is removed and the logic timers dropout. The delay in clearing a fault on a three-terminal line with outfeed and a breaker-failure condition can be very long (in the range of step-distance Zone 2 backup clearing times), and the impact on system transient stability may need to be evaluated.

The commonly used DCB and POTT scheme logic shown in Fig. 11 and Fig. 13 is assumed for the following analysis. The current reversal logic and control of the block or permissive signal may vary among line relays and impact the analysis.

A. Local Fault-Clearing Time at Terminal C

The longest clearing of a close-in fault at a terminal occurs if the breaker at that terminal fails, or if the breaker at the other terminal not experiencing outfeed fails, assuming all terminals have the same breaker-failure timer pickup setting. For a close-in fault F3, shown in Fig. 12, and a breaker failure at Terminal C, the total clearing time (in cycles) from fault inception to clearing the Terminal C source is shown in (12).

$$\text{Terminal C Clearing} \approx \text{RTC} + \text{62BF} + 86 + \text{BKR} \quad (12)$$

where:

RTC is the relay trip time at Terminal C.

62BF is the breaker-failure timer pickup setting.

86 is the lockout relay time.

BKR is the interrupting time of the breakers adjacent to the failed breaker.

Using typical values for RTC (1 cycle), 62BF (10 cycles), 86 (1 cycle), and BKR (2 cycles), the total breaker-failure clearing time at Terminal C is approximately 14 cycles. This also corresponds to the total clearing time of a breaker-failure condition for a two-terminal line because the breakers at the other terminal would have already tripped.

B. Fault-Clearing Time at Remote Terminals

For the three-terminal line with outfeed at Terminal B, unlike in a two-terminal line, the relays at the other line terminals wait for the fault to be cleared from Terminal C. The current reverses after Terminal C clears, and the additional time to clear Terminal A and Terminal B depends on the delays from the current reversal logic and other delays specific to the pilot scheme used.

1) Terminal B Clearing Time

In a DCB scheme, when Terminal C clears, the blocking elements at Terminal B drop out and the current reversal timer runs. When the timer expires, a STOP command is given to the carrier transceiver, the block signal is removed when the transceivers reset, and Terminal B clears the fault with a clearing time calculated in (13).

$$\begin{aligned}&\text{Terminal B Clearing} \approx \\ &\text{Terminal C Clearing} + \text{RD} + \text{CRD} + \text{BXT} + \text{BKR}\end{aligned} \quad (13)$$

where:

RD is the blocking element reset time.

CRD is the current reversal dropout delay.

BXT is the blocking extension time included because the transceiver at Terminal B could receive its own block signal. BXT can be set to zero delay when fiber optics are used for the pilot communications medium.

Using typical values for RD (1 cycle), CRD (5 cycles), BXT (1 cycle), and BKR (2 cycles), Terminal B takes an additional 9 cycles to clear after Terminal C is cleared. Consequently, the total clearing time at Terminal B via the DCB scheme is about 23 cycles. This is comparable to a typical overreaching step-distance Zone 2 time delay. Note that because of the outfeed condition, Zone 2 at Terminal B must also wait for Terminal C to clear the fault and be delayed by approximately 14 cycles based on (12).

A POTT scheme also has the current reversal logic and gets delayed in a similar manner because of the outfeed condition. The scheme remains dependable, provided that the permissive signals from Terminal C are received by the other two terminals following breaker-failure clearing at Terminal C. If an echo keying scheme is relied upon at Terminal C to supply its permissive signals, then the clearing at Terminal B depends on the scheme employed and may be delayed further.

2) Terminal A Clearing Time

The total clearing time at Terminal A is approximately the same as the clearing time at Terminal B, unless the step-distance Zone 2 elements at Terminal A trip first, which results in (14). Unlike at Terminal B, the Zone 2 distance elements at Terminal A should pick up within one cycle of fault inception and start the Zone 2 timer. The total clearing time at Terminal A will be the lesser of either the time it takes the pilot scheme to trip or the Zone 2 timer to time out. The Zone 2 timer may be set longer than usual if the Zone 2 elements must coordinate with other Zone 2 elements of adjacent lines, as shown in Fig. 7.

$$\text{Terminal A Clearing} \leq \text{Terminal B Clearing} \quad (14)$$

C. Breaker-Failure Application Considerations

To prevent breaker-failure clearing times from becoming too long, a breaker-failure initiation at Terminal C benefits from fast underreaching elements. For phase fault protection, this may be the Zone 1 phase element; and for ground fault protection, it may be the Zone 1 ground or a high-set instantaneous overcurrent element that picks up for the faults that result in outfeed. If an inverse-time ground overcurrent

element initiates the breaker-failure scheme, overall clearing times could become exceptionally long.

For the Oncor application to Line ABC, primary protection includes Zone 1 phase and ground distance elements, as well as phase distance and directional ground overcurrent pilot protection in DCB schemes over a PLC channel. Backup protection comprises phase and ground distance and inverse-time ground overcurrent elements. Oncor determined that the additional time to clear a breaker-failure condition on their three-terminal line would not result in system instability. Thus, Oncor did not modify their standard protection and relay settings.

If faster breaker-failure clearing on three-terminal lines is needed, an option is to apply direct transfer tripping for a breaker-failure condition using channels other than the power line. The use of DUTT or PUTT schemes with fiber-optic channels would reduce the overall clearing times during breaker-failure conditions. Other options are reducing the delay settings associated with breaker failure, current reversal, or blocking extension timers. Reducing delays reduces scheme security, therefore, the impact must be carefully evaluated.

VIII. Directional Element Polarizing Considerations

Many relays provide the user flexibility in choosing the polarizing quantity for directional elements for ground fault protection. Two popular choices are the negative-sequence (Q) and zero-sequence (V) voltage-polarized elements. Users have the flexibility to use one or both in a preferential order that suits the application [14].

A. Polarizing Similarities in Two- and Three-Terminal Lines

There are some general similarities in application guidelines for choosing the directional element polarizing quantity for both two- and three-terminal transmission lines. First, it is preferable to use negative-sequence (Q) voltage-polarized directional elements when there is a possibility of zero-sequence mutual coupling with parallel transmission lines [15] [16]. There can be conditions under which the zero-sequence networks of the faulted and unfaulted portions of the system are electrically isolated but mutually coupled [15]. These conditions typically result in the most significant impact of mutual coupling on the zero-sequence (V) voltage-polarized elements causing them to make incorrect directional decisions. Fault studies that use short-circuit analysis programs, assessment of system topology, and knowledge of operating conditions should be used to decide whether the Q polarized element is better suited under conditions with mutual coupling [15] [16]. Second, the use of zero-sequence (V) voltage-polarized directional elements is preferable when there may be insufficient or poor negative-sequence currents at the relay location [7].

This situation is becoming increasingly prevalent with the interconnection of IBRs to the power system. When radially feeding a fault, IBRs may inject negative-sequence currents that are not coherent with the negative-sequence voltages due to control system response, so their pickup settings should be desensitized to prevent a misoperation [8]. However, IBRs are typically connected to the transmission system via a transformer that has its high-voltage winding in a grounded-wye configuration, with one other winding that is delta-connected [7] [17]. This configuration provides a strong zero-sequence path for transmission system ground faults. Also, unlike the negative-sequence voltages and currents that may be incoherent in the presence of IBRs, the zero-sequence quantities follow the traditional phase-angle relationships. Consequently, the zero-sequence (V) polarized directional element may provide better ground-fault protection when protecting transmission lines that are fed by IBRs. Short-circuit programs provide the capability of fault studies with zero-sequence mutual coupling and, more recently, systems with IBRs [17] although they may not accurately capture the transient IBR control response and require application specific guidance for systems with IBRs [8].

B. Polarizing Differences in Two- and Three-Terminal Lines Due to Disagreement Between Sequence Networks

To understand some of the differences between two- and three-terminal lines, we first explain the criteria for a very commonly applied directional element preference order of QV [14]:

- Negative-sequence current magnitude should be higher than user-settable forward or reverse current thresholds.
- Negative-sequence current magnitude should be higher than 10 percent of the positive-sequence current magnitude and 20 percent of the zero-sequence current magnitude.

If both the magnitude and percentage checks for the negative-sequence directional element are not satisfied, the relay resorts to the zero-sequence voltage-polarized directional element using similar criteria [14]:

- Zero-sequence current magnitude should be higher than user-settable forward or reverse thresholds.
- Zero-sequence current magnitude should be higher than 10 percent of the positive-sequence current magnitude.

In two-terminal lines, the preference order QV works very well for an external fault because the current entering one terminal must exit the other terminal, and the magnitude and percentage checks are satisfied identically at both terminals.

In three-terminal lines, however, the current at one terminal is the sum of the currents at the other two terminals. While the magnitude check is addressed in Section V using well-coordinated forward and reverse thresholds, the percentage check may not be satisfied if the negative-sequence current is much smaller than the zero-sequence current and the negative-sequence network is non-homogenous. A strong zero-sequence network with a weak negative-sequence network could exist in weak systems (i.e., lines that have a breaker open on the low-voltage delta side of a delta-wye transformer) during system contingencies, or in systems with IBRs.

Fig. 22 illustrates the scenario where relays at all three terminals declare a forward fault even though the fault is external and the sequence currents entering and exiting the line

are equal. At Terminal C, the negative-sequence current magnitude is less than 20 percent of the zero-sequence current magnitude, so the relay uses the zero-sequence directional element to declare a forward fault direction. At Terminal A and Terminal B, since the percentage check is satisfied, the negative-sequence directional element is used to declare a forward fault direction.

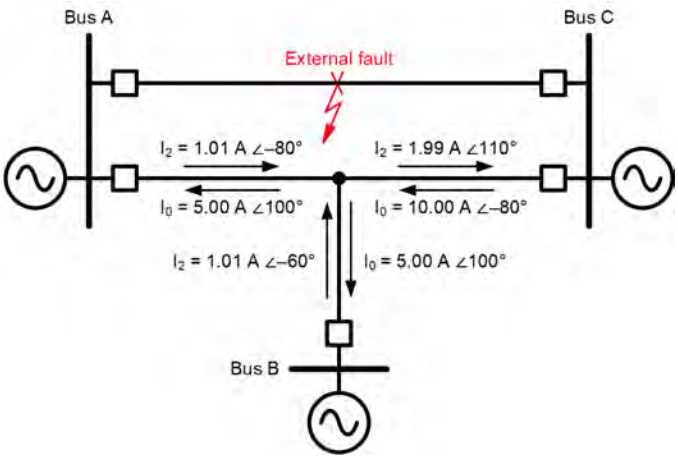

Fig. 22. Negative- and zero-sequence currents for an external fault

To overcome this scenario, an option is to use only one polarizing quantity (i.e., V only for the example in Fig. 22) at all line terminals. The polarizing option may be selected based on the guidance in Section VIII.A, while considering the relative strengths of the negative- or zero-sequence networks to mitigate outfeed effects and/or improve protection sensitivity. For the Oncor Line ABC, this was not an issue, but it may be a consideration for other three-terminal lines or tapped lines.

C. Polarizing Differences in Two- and Three-Terminal Lines Due to Outfeed Effect

The choice of polarizing quantity (Q or V) also impacts the infeed versus outfeed scenario for internal and external faults near Terminal C shown in Fig. 12. The requirement for an outfeed condition at Terminal B is the presence of a relative weak source behind Terminal B but a strong interconnection from Bus B to Bus C, such as the example in Fig. 2. However, a terminal that is weak in the negative-sequence network may provide a strong zero-sequence path due to the presence of grounding transformers, as explained in Section VIII.A. The Oncor system in Fig. 4 is an example where all three sources have a lower zero-sequence impedance than the positive- and negative-sequence impedance, especially behind Terminal A where the generator step-up transformers of the combustion unit generating station presents a low-impedance zero-sequence path.

Based on short-circuit studies on the Oncor system in Fig. 4, for faults near Bus B, there was outfeed at Terminal C when considering the negative-sequence network but not on the zero-sequence network. On the other hand, for faults near Bus C, Terminal B experienced outfeed in both the negative- and zero-sequence networks. However, the outfeed in the zero-sequence network was more severe than in the negative-sequence network and was observed for faults further internal to the line. Use of either polarizing quantity (Q or V) led to outfeed for differing fault locations, and thus resulted in the security and dependability issues described in Section V and Section VI. Ultimately, due to the relative severity of observed outfeed behavior for simulated faults and the presence of mutual coupling with adjacent lines, the negative-sequence polarizing quantity was used for the directional element (Q only) at the three terminals of Line ABC.

To summarize, comprehensive short-circuit studies should be performed to evaluate the choice of ground directional element polarization and evaluate the desired directional element behavior under varying system configurations.

IX. Conclusion

The following summarizes the differences encountered when protecting three-terminal lines relative to two-terminal lines:

- Overreaching distance zones may require larger reach settings due to infeed, whereas underreaching zones may require shorter reach settings due to outfeed.
- Outfeed effect and the presence of weak terminals necessitates greater coordination margins between forward and reverse directional element overcurrent thresholds and distance element reaches to achieve adequate pilot scheme security.
- Outfeed effect and the presence of weak terminals may also reduce pilot scheme dependability. To address this, consideration may be given to less-commonly applied DUTT and PUTT schemes.
- Current reversal logic in two-terminal lines addresses sequential clearing of an external fault on an adjacent line. For three-terminal lines, this logic may engage for an internal fault due to an outfeed scenario. If current reversal logic engages, fault-clearing times may incur an additional delay of about 8 or 9 cycles. If there is an additional breaker failure scenario, fault-clearing times could have a similar delay as step-distance Zone 2 backup.
- It is preferable to use only one polarizing quantity for the ground directional element. A consideration includes the strength of the negative-sequence network relative to the zero-sequence network to mitigate issues related to directionality disagreement between the sequence networks and outfeed effect.

Many of the above considerations require comprehensive short-circuit studies.

X. References

[1] IEEE Standard C37.113-2015, IEEE Guide for Protective Relay Applications to Transmission Lines.

[2] NERC, "The Complexity of Protecting Three-Terminal Transmission Lines," September 2006. Available: nerc.com/comm/PC/System %20Protection%20and%20Control%20Subcommittee%20SPCS%20D L/SPCTF-3TerminalLines091906.pdf.

[3] S. H. Horowitz and A. G. Phadke, *Power System Relaying*, 4th ed., Wiley Press, 2014.

[4] IEEE Standard C37.246-2017, IEEE Guide for Protection Systems of Transmission-to-Generation Interconnections.

[5] IEEE/NERC Task Force on Short-Circuit and System Performance Impact of Inverter Based Generation, "Impact of Inverter Based Generation on Bulk Power System Dynamics and Short Circuit Performance," PES-TR68, July 2018.

[6] M. Nagpal and C. Henville, "Impact of Power-Electronic Sources on Transmission Line Ground Fault Protection," *IEEE Transactions on Power Delivery*, Vol. 33, Issue 1, February 2018, pp. 62–70.

[7] R. Chowdhury and N. Fischer, "Transmission Line Protection for Systems With Inverter-Based Resources – Part I: Problems," *IEEE Transactions on Power Delivery*, August 2020. Available: doi: 10.1109/TPWRD.2020.3019990.

[8] R. Chowdhury and N. Fischer, "Transmission Line Protection for Systems With Inverter-Based Resources – Part II: Solutions," *IEEE Transactions on Power Delivery*, October 2020. Available: doi: 10.1109/TPWRD.2020.3030168.

[9] NERC Standard PRC-023-4 – Transmission Relay Loadability.

[10] NERC Implementation Guidance for PRC-023-4, "Determination of Practical Transmission Relaying Loadability Settings," December 2017.

[11] M. Thompson and D. Heidfeld, "Transmission Line Setting Calculations – Beyond the Cookbook," proceedings of the 41st Annual Western Protective Relay Conference, Spokane, WA, October 2014.

[12] B. Kasztenny, M. V. Mynam, N. Fischer, and A. Guzman, "Permissive or Blocking Pilot Protection Schemes? How to Have it Both Ways," proceedings of the 47th Annual Western Protective Relay Conference, Spokane, WA, October 2020.

[13] W. Tucker, A. Burich, M. Thompson, R. Anne, and S. Vasudevan, "Coordinating Dissimilar Line Relays in a Communications-Assisted Scheme," proceedings of the 67th Annual Conference for Protective Relay Engineers, Atlanta, GA, April 2014.

[14] A. Guzmán, J. Roberts, and D. Hou, "New Ground Directional Elements Operate Reliably for Changing System Conditions," proceedings of the 23rd Annual Western Protective Relay Conference, Spokane, WA, October 1996.

[15] C. Holt and M. Thompson, "Practical Considerations When Protecting Mutually Coupled Lines," in 69th Annual Conference for Protective Relay Engineers, College, Station, TX, April 2016.

[16] D. A. Tziouvaras, H. J. Altuve, and F. Calero, "Protecting Mutually Coupled Transmission Lines: Challenges and Solutions" proceedings of the 40th Annual Western Protective Relay Conference, Spokane, WA, October 2013.

[17] IEEE PES PSRC Report, "Modification of Commercial Fault Calculation Programs for Wind Turbine Generators," PES-TR78, June 2020.

XI. Biographies

Robert Jimerson received his BS degree in electrical engineering from Louisiana State University, Baton Rouge, Louisiana, in 1999. He started with Oncor Electric Delivery (then TXU) in 1999 in the Distribution System Design group. Since 2005, he has been a member of the System Protection group and currently has the title of Consulting Engineer with primary duties as an Area Lead Relay Setter. Mr. Jimerson is a Registered Professional Engineer in the State of Texas.

Alex Hulen, EIT, received his BS degree in electrical engineering, summa cum laude, in 2015 from Texas A&M University. Beginning in 2016, he worked for Entergy as a protection engineer designing relay settings for transmission system protective relays. In 2019, he joined Schweitzer Engineering Laboratories, Inc., where he is presently employed as a project engineer. He is an IEEE member and a registered engineer-in-training in the state of Texas.

Ritwik Chowdhury received his BS degree in engineering from the University of British Columbia and his MS degree in engineering degree from the University of Toronto. He joined Schweitzer Engineering Laboratories, Inc. in 2012, where he has worked as an application engineer and is presently a senior engineer in the Research and Development division. Ritwik holds 4 patents and has authored over 15 technical papers in the area of power system protection and point-on-wave switching. He is a member of the main committee and a member of the rotating machinery, system protection and relaying practices subcommittees of the IEEE PSRC committee. He is a senior member of the IEEE and a registered professional engineer in the province of Ontario.

Neeraj Karnik received his MS degree in electrical engineering from the University of Texas at Austin and his BS degree in electrical engineering from the College of Engineering Pune (COEP), India. He joined DNV GL in 2012 as a system studies engineer and evaluated challenges associated with the interconnection of renewable resources with the bulk power system. He joined Schweitzer Engineering Laboratories, Inc. in 2017, where he currently works as a project engineer. He is a registered professional engineer in the State of Texas.

Bernard Matta received his BS degree in electrical engineering from Pennsylvania State University. He joined Virginia Power (presently Dominion Energy) in 1986 and worked in the System Protection department calculating relay settings, performing system studies, testing protection systems, and writing standard procedures. He was on a team that evaluated and implemented microprocessor-based relays to replace electromechanical equipment. Bernard joined Schweitzer Engineering Laboratories, Inc. in 2000. He has served many electric utilities and customers throughout the U.S. by providing relay settings to protect transmission, distribution, and generation equipment. Bernard is an IEEE member.

© 2021 by Oncor Electric Delivery and
Schweitzer Engineering Laboratories, Inc.
All rights reserved.
20210304 • TP7000-01