Double-Ended Traveling-Wave Fault Locating Without Relay-to-Relay Communications

David López Corton and Jorge Vaquero Melado, *Red Eléctrica de España*
Jesus Cruz, Richard Kirby, Yusuf Zafer Korkmaz, Gianfranco Patti, and Greg Smelich,
Schweitzer Engineering Laboratories, Inc.

***Abstract*—This paper discusses how Red Eléctrica de España, the transmission system operator in Spain, successfully applied double-ended traveling-wave-based fault locating (DETWFL) on a pilot project where relay-to-relay communications were unavailable. The offline DETWFL methodology uses traveling-wave arrival time information that is manually collected from time-synchronized relays at both ends of the line after an internal fault occurs. The paper also discusses the possibility of using the DNP3 protocol over Ethernet to retrieve event information, allowing for automatic DETWFL calculations offline. The paper includes an analysis of a B-phase-to-ground fault on the line to illustrate the performance of the applied offline DETWFL method.**

I. Introduction

The double-ended traveling-wave-based fault-locating (DETWFL) method using current traveling waves (TWs) was first introduced in a transmission line protective relay in 2012. Since then, the DETWFL method has also been made available in ultra-high-speed (UHS) relays. TW-based fault locating is widely popular with transmission system operators, largely due to its field-proven track record with reported errors being within one tower span (300 m; 1,000 ft) on average, regardless of line length. The DETWFL method incorporated in UHS relays provides accurate and dependable results, but it requires TW data from the two line terminals. When relay-to-relay communications are available, the UHS relay can collect the necessary time stamps of the initial TW that arrives at each terminal when a fault occurs, automatically calculate the fault location using the DETWFL method, and make the result available to the user within tens of milliseconds. As described in [1], relay-to-relay communications can be achieved by using a dedicated point-to-point fiber-optic channel (i.e., direct fiber) or an IEEE C37.94 multiplexed channel. However, there are situations where relay-to-relay communications may not be available. In this case, accurate fault location results can still be obtained by using the offline DETWFL methodology described in this paper.

The availability of a precise time reference applied to both line terminals allows for accurate time-stamping of the wave arrival information and enables calculations using information from the two line terminals. This time-stamping process is summarized in Section III.C and is critical for implementing analysis and calculations. The offline DETWFL methodologies described in Section V require the extraction of TW time stamps from the UHS relays using one of the methods described in Section IV. These extraction methods include manual calculations from time-stamped information contained in the event records and an automated process where the relays send the time-stamped information to a central device via the DNP3 protocol over Ethernet. The paper also describes the use of event analysis software that is capable of analyzing TWs and estimating the fault location using TWs.

Red Eléctrica de España (REE) is the transmission grid owner and operator for the transmission system in Spain. With more than 44,000 km of high-voltage transmission lines, REE is responsible for ensuring the proper operation of the Spanish electrical system, coordinating the generation transport system, and planning the long-term growth of the transmission network to provide secure and continuous power supply to the country.

With the intent to explore and gain experience with TW-based fault-locating technology (particularly, improved accuracy of the results and ability to adaptively control autoreclosing on hybrid lines), REE decided to install several UHS relays in their transmission system. In the early stages of their evaluation, relay-to-relay communications were not yet in place on one of the transmission lines where the UHS relays were installed. However, the relays were connected to high-accuracy Global Positioning System (GPS) clocks, allowing event data to be time-synchronized and enabling the ability to use the offline DETWFL methods.

A detailed event analysis from a B-phase-to-ground fault on the 220 kV overhead line between the Casaquemada and Onuba terminals in the REE transmission network serves as an example to show the application of the different offline DETWFL strategies explained in this paper. A summary of results from five faults that happened on this line while relay-to-relay communications were not available is also provided. These results highlight the improved accuracy of the DETWFL method as compared to the singled-ended impedance-based fault-locating (SEZFL) method and the single-ended traveling-wave-based fault-locating (SETWFL) method.

II. Background

A. Project Drivers

In 2019, REE launched the Traveling-Wave Fault Identification System (referred to as SIFOV) project to test new technologies and developments that could provide improvements in two main areas:

- Accurate fault locating
- Adaptive autoreclosing for hybrid lines

Autoreclosing is one of the main functions included in REE's line protection standard. Based on REE's philosophy, the autoreclose function is activated in overhead transmission lines, in single- or three-pole mode, depending on the voltage level and the proximity with generation. In underground cables, the autoreclosing is not in service, as faults tend to be permanent. For hybrid lines, which contain both overhead line and underground cable sections, autoreclosing is active for those cases in which the protection system can determine that the fault occurred in an overhead section.

Presently, the REE design for adaptive autoreclosing on hybrid lines is based on the operation of available distance protection zones with a reach set to block autoreclosing on underground sections or to allow autoreclosing on overhead sections. Since the distance protection is single-ended and operates based on the measured apparent impedance to the fault location, the usual security margins considered are around 20 percent. Depending on the lengths of the overhead and underground sections, these security margins may result in large overhead portions in which autoreclosing is blocked unnecessarily, only to ensure dependability for faults in the underground section.

The continuous growth of cities, along with the opposition by some to electrical facilities, has caused hybrid lines to become a common solution. In Spain, hybrid lines can consist of several overhead and underground sections, which further challenges the technology required to distinguish between sections.

To achieve the two objectives of the project, REE needed an accurate fault-locating system able to provide an adequate location in less than 250 ms. This timing requirement was not fixed by the fault location indication itself, but rather by the autoreclose blocking logic, since the minimum time for the first autoreclosing attempt in the REE system is 400 ms. Reference [2] explains the method used to accomplish this with UHS relays, which provides the ability to allow or inhibit autoreclosing by using adaptive autoreclose cancel logic based on the accurate real-time DETWFL result. This function requires relay-to-relay communications.

REE assessed various alternatives, and finally they decided that the UHS relays were the best equipment for the project due to the four fault-locating methods (single- and double-ended TW- and impedance-based fault locating: SETWFL, DETWFL, SEZFL, and DEZFL, respectively) running in parallel and the promising developments on TWFL included in the relay, such as the ability to control the line autoreclosing relay to cancel reclosing for faults on underground cable sections of a line while still allowing reclosing on overhead sections.

The project was structured in two stages running in parallel:

1. Pilot field installation. In this stage, REE selected various facilities representative of the applications in which the solution could be applied. The system was commissioned, and its performance was monitored. During this period, telecommunication, maintenance, and design engineers received training in order to gain knowledge about the technology.
2. Laboratory tests. Two UHS relays were installed in REE's laboratory to carry out intensive hardware-in-the-loop tests of the equipment. Scenarios like the pilot field installations were modeled in a real-time digital simulator (RTDS) to analyze the performance of the equipment in a wide variety of conditions.

B. Transmission Lines Used for DETWFL Evaluation

This section describes the locations selected for the project.

1) N. Valladolid-to-Mudarra Line, 200 kV

The system was commissioned in November 2019. The circuit is a hybrid line with an overhead section of 21.85 km (Mudarra) and an underground section of 2.42 km (N. Valladolid). Line energization tests were performed during commissioning, and the measured TW propagation times (TWLPT) for the overhead and underground sections were determined to be 74.5 µs and 21.8 µs, respectively.

Relay-to-relay communications have been available on this line since the time of commissioning, allowing REE to evaluate the adaptive autoreclose cancel logic described in [2] using the UHS relays. When writing this paper, this feature had not yet been implemented. The telecommunications infrastructure deployed for this line is described in the Appendix, Section VIII.A.

2) Puerto de la Cruz: Spain-to-Morocco 1 Line and Spain-to-Morocco 2 Line, 400 kV

In this pilot project, the two transmission lines interconnecting Spain and Morocco were selected. Each interconnection consists of a hybrid line that has an overhead section on the Spanish end, an overhead section on the Moroccan end, and a submarine cable section between them. The Spanish overhead section has a total length of 9.33 km, and the Moroccan overhead section is 22.21 km. The approximate length of the submarine cable is 31.3 km. When writing this paper, the UHS relays were installed only on the Spanish side of each line.

The first circuit was commissioned in March of 2020, and the second circuit was commissioned in February of 2021. Line energization tests were performed during commissioning, and the measured TWLPT for the Spanish overhead section was determined to be 31.93 µs. The propagation times of the submarine cable and the Moroccan overhead section could not be deduced from the line energization event records, and they are still under study. The TWLPT values used in the UHS relay settings for these sections were approximated using software simulation tools and may be modified later when additional field data becomes available. The TWLPT values for the submarine cable section and Moroccan overhead section are 236.06 µs and 72.5 µs, respectively.

3) Casaquemada-to-Onuba Line, 220 kV

The system was commissioned in November 2019. The circuit is a 61.98 km (38.51 mi) overhead line. Line energization tests were performed during commissioning, and the measured TWLPT was determined to be 210.5 µs.

Due to various delays in the deployment of the telecommunications infrastructure, this system operated

without communications for several months. During this period, five faults occurred on the line, which led to the offline DETWFL calculations described in this paper. Section VI shows the offline analysis performed for one of these faults. The telecommunications infrastructure that was later deployed for this line is described in the Appendix, Section VIII.B.

III. Double-Ended Traveling-Wave-Based Fault Locating

A. Principle of Operation

Fig. 1 shows a Bewley diagram, which is a time-spatial chart that shows TWs progressing along the time axis (vertically down) and simultaneously progressing along the distance axis (left to right and right to left), for a fault at location F on a line of length LL. The fault is M (km or mi) from the local terminal, L, and LL – M (km or mi) from the remote terminal, R. Faults launch TWs that propagate with a velocity (PV) equal to LL divided by TWLPT (i.e., PV = LL/TWLPT) [1].

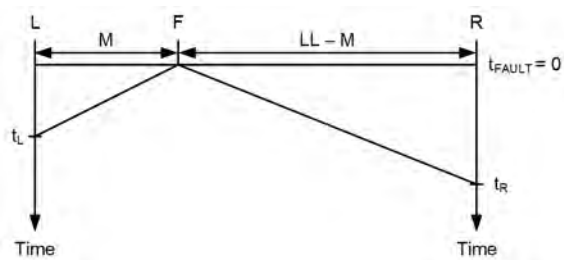

Fig. 1. Bewley diagram explaining the DETWFL method.

When a fault occurs at time $t_{FAULT} = 0$, the first TW arrives at terminal L at time $t_L = M/PV = M \bullet LL/TWLPT$.

Similarly, the first TW arrives at terminal R at time $t_R = (LL - M)/PV = (LL - M) \bullet LL/TWLPT$. Solving these two equations for fault location, M, we obtain the general equation used for DETWFL as (1).

$$M = \frac{LL}{2}\left(1 + \frac{t_L - t_R}{TWLPT}\right) \quad (1)$$

The TWLPT for the transmission line can be measured during commissioning by performing a line energization test.

When the propagation time through current transformer (CT) secondary cables is significantly different at each line terminal, the accuracy of this method can be affected. Assuming the TW propagation velocity for cables is 70 percent of the speed of light in free space, 50 m of difference in cable length between line terminals may result in 36 m of fault location error for the DETWFL method on an overhead line [1].

To increase accuracy, the fault locator compensates for the time delay associated with the cables between the CTs and the relay by backdating the time stamp of the initial TW through use of the TW cable propagation time (TWCPT) setting. If the TWCPT setting for each terminal is known ($TWCPT_L$ for Terminal L and $TWCPT_R$ for Terminal R), they can be used to compensate for the variation in CT lead length by using (2), which is a modification of (1).

$$M = \frac{LL}{2}\left[1 + \frac{(t_L - TWCPT_L) - (t_R - TWCPT_R)}{TWLPT}\right] \quad (2)$$

When relay-to-relay communications are obtained through a direct fiber-optic channel, the UHS relays synchronize their internal clocks to each other, providing a common time reference and making the operation of the DETWFL method independent of an external time source.

When relay-to-relay communications are obtained through a multiplexed fiber-optic channel, such as when using an IEEE C37.94-compliant synchronous optical networking (SONET)/synchronous digital hierarchy (SDH) multiplexer, each UHS relay must be synchronized to an absolute time reference by connecting the IRIG-B input to an external IEEE C37.118-compliant clock with submicrosecond accuracy.

Reference [2] provides an accuracy analysis of the DETWFL method with respect to the LL, TWLPT, and TWCPT settings, as well as suggestions on how to improve the accuracy of these settings.

B. Mode and Phase Reference Selection

UHS relays use the measured current signals to obtain the phase TWs (TWA, TWB, and TWC), obtain the modal TWs (zero, alpha, and beta Clarke components), and apply them accordingly in various functions. The alpha components are appropriate for analyzing TWs launched by single-line-to-ground faults and the beta components for line-to-line faults. The modal signals are calculated as follows:

- The ground mode is calculated as TW0 = (TWA + TWB + TWC)/3.
- The alpha aerial mode referenced to phase A is calculated as TWA – TW0. This mode is typically the highest and most reliable for A-phase-to-ground faults on overhead transmission lines. Similar equations are used to calculate the phase B and phase C referenced alpha modes.
- The beta aerial mode referenced to phases A and B is calculated as (TWA – TWB)/√3. This mode is typically the highest and most reliable for A-phase-to-B-phase (AB) faults on overhead transmission lines. Similar equations are used to calculate the BC- and CA-referenced beta modes.

C. Time-Stamping the Arrival Time of TWs

Since the accuracy of the calculated fault location from (1) or (2) is highly dependent on TW arrival times with submicrosecond resolution, the method the fault locator applies to estimate the TW arrival time is critical to its accuracy.

As [1] describes, a differentiator-smoother filter provides a simple and robust method for extracting the TWs from the input signals sampled at 1 MHz. The differentiator-smoother filter responds to an ideal step change in the input signal with a triangle-shaped output, and it responds to a ramp transition between two levels with a parabola-shaped output, as Fig. 2 shows.

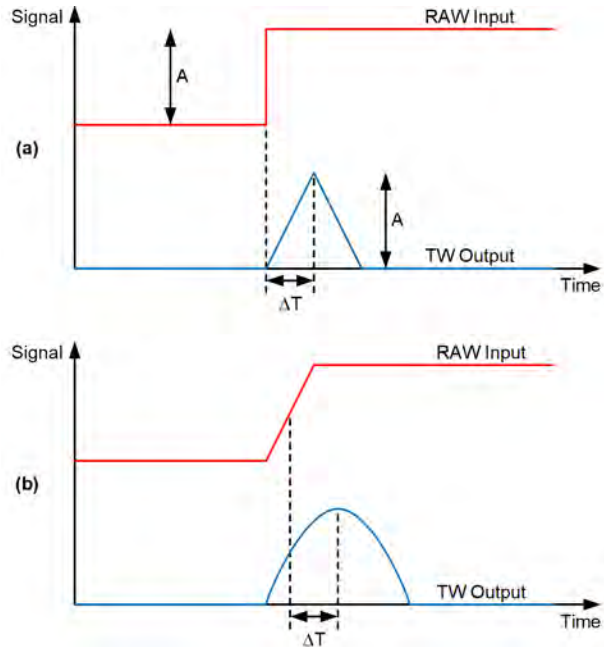

Fig. 2. Response of a differentiator-smoother filter to (a) an ideal step, and (b) a ramp.

To get a better time resolution, which translates to better fault location accuracy, the TW arrival times can be estimated using interpolation between samples, fitting a parabola to the output of the differentiator-smoother filter using the least-squared errors method. The time of the peak of the best-fitting parabola, as shown in Fig. 3, is the TW arrival time and provides a time-stamping accuracy of approximately 0.1 μs [1] [3].

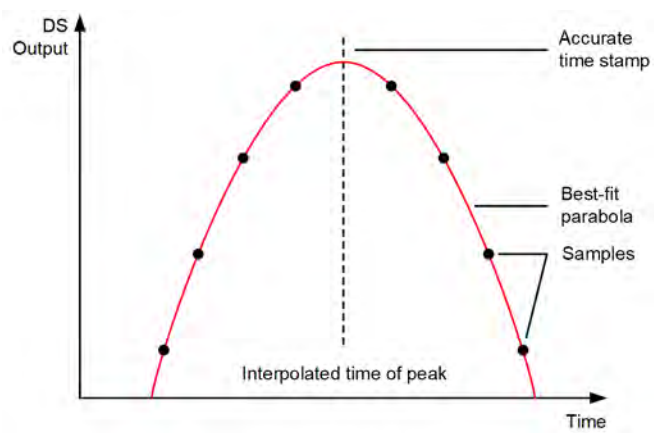

Fig. 3. Using interpolation to find the time of the peak with an accuracy that is better than one sampling interval.

IV. Extracting TW Time Stamps

Section V.A describes how the DETWFL results may be obtained offline either by using a manual process of obtaining the necessary information and performing calculations or by implementing an automated method for collecting the data and calculating the results in a central device. In either case, the time stamp of the initial TW that arrives at each terminal of the line when the fault occurs must be obtained. This section describes several methods to obtain the TW time stamps.

A. *IEEE COMTRADE Header Files*

The UHS relay provides a transient recording functionality with two types of records:

- Ultra-high-resolution record containing voltages and currents (megahertz record [MHR], 1 MHz sampling)
- High-resolution record containing voltages and currents, derived protection quantities, and all digital bits (time-domain record [TDR], 10 kHz sampling)

Both types of records are stored in IEEE C37.111-2013 COMTRADE format. Per this format, both the MHR and TDR IEEE COMTRADE records comprise three files: a configuration (CFG), data (DAT), and header (HDR) file, where the three-letter abbreviations serve as the file extension type. The CFG file describes the content of the DAT file, the DAT file contains the values for each input channel for each sample in the record, and the HDR file contains relay settings and event-related analog quantities (such as prefault and fault voltages and currents, fault type location, etc.) helpful in analyzing power system events and relay operation [1].

Fig. 4 shows the portion of the HDR file that contains fault location information. This information is available in the HDR file for both the MHR and TDR IEEE COMTRADE records. If the UHS relay can estimate the fault location using one of the available methods (SETWFL, DETWFL, SEZFL, and DEZFL, with as many as four possible alternatives for the SETWFL method), the results are populated in the respective fields.

```
[Fault_Location]
SE_TW_Location1
SE_TW_Location2
SE_TW_Location3
SE_TW_Location4
DE_TW_Location
SE_Z-Based_Location
DE_Z-Based_Location
First_TW_Time_Local
First_TW_Time_Remote
```

Fig. 4. Portion of the IEEE COMTRADE header file that contains fault location information.

The fields in Fig. 4 are described as follows:

- SE_TW_Location*n* (*n* = 1, 2, 3, 4) are the fault locations from the SETWFL method.
- DE_TW_Location is the fault location from the DETWFL method.
- SE_Z-Based_Location is the fault location from the SEZFL method.
- DE_Z-Based_Location is the fault location from the DEZFL method.
- First_TW_Time_Local is the time stamp of the first local TW, compensated for by the CT cable delay.
- First_TW_Time_Remote is the time stamp of the first remote TW, compensated for by the CT cable delay.

Without relay-to-relay communications, the time stamp of the first remote TW is unavailable to the local relay, and, therefore, the result from the DETWFL method cannot be automatically calculated by the relay. Regardless of the availability of relay-to-relay communications, the arrival time of the initial TW at the local terminal is First_TW_Time_Local. This time stamp is interpolated using the method described in Section III.C. It is also compensated for the CT cable delay [1].

Section V.A explains how to calculate the DETWFL results offline by obtaining First_TW_Time_Local from the HDR file in both the local and remote relays and using the time stamps in (1).

B. DNP3 LAN/WAN Over Ethernet

It is possible to automate the manual DETWFL calculations discussed in this paper using DNP3 with an optional remote terminal unit (RTU) in the substation that polls the respective UHS relay. This section describes how to obtain the time stamp of the initial TW using DNP3 LAN/WAN over Ethernet. It also explains how to use these time stamps in (1) to automatically calculate the DETWFL results in a central device. Since information must be available from both terminals of the transmission line, the scheme must check the communication status and the availability and quality of data from both terminals. It must also check the time-synchronization status of both UHS relays providing input data for the calculation. The automated method must check that data from both terminals are for the same fault event and consistent in terms of time stamps.

The following information can be employed in a DNP3 register map in the UHS relays and sent to a client system through DNP3 communications.

- Analog input objects:
  - First local TW arrival time in DNP3 format truncated to the second (FILTWH, FILTWM, FILTWL, which are the high, middle, and low 16 bits, respectively)
  - First local TW arrival time, milliseconds portion (FILTWMS)
  - First local TW arrival time, microseconds portion (FILTWUS)
  - First local TW arrival time, nanoseconds portion (FILTWNS)
- Binary input object: Relay clock synchronized with high accuracy to the absolute time (TSOK)

The analog input objects must be set without any deadband so that any data change is reported as an analog input event.

A DNP3 client can then poll the UHS relays (or optionally the RTUs which are polling the UHS relays) and collect these data objects from both ends of the transmission line. The DNP3 client must also store the LL and TWLPT values of the transmission line as local variables.

Using this information, the DNP3 client can implement an algorithm that can be triggered when the analog objects reported by both relays have good data quality, their time stamps have changed, and the time stamps are coherent (i.e., the difference between the time of fault reported by each UHS relay is less than one second).

Using the binary input object information that represents the UHS relay clock synchronization status, the algorithm should check that both relays are time-synchronized at the time of the fault event. If this condition is also satisfied, then the time difference between the two first wave arrival times can be computed. If the computed time difference is smaller than the TWLPT value, the algorithm can calculate the fault location using this time difference and the local variables that store the LL and TWLPT values. Otherwise, the algorithm can exit without returning a fault location result.

Fig. 5 shows a flowchart depicting the proposed method for automating retrieval of TW time stamps via DNP3 and performing offline DETWFL calculations in a central device.

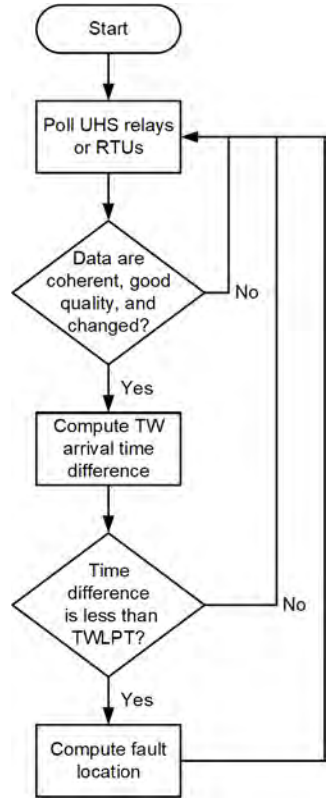

Fig. 5. Flowchart representing proposed offline DETWFL method using DNP3.

The fault location can be calculated using the arrival time difference of the first TW at each end as follows:

1. Construct the date-time object for the local and remote relay using FILTWH, FILTWM, FILTWL (e.g., TW_TIME_S_L, TW_TIME_S_R). These quantities are truncated to the second.
2. Compute the date-time difference in seconds (e.g., TW_DIFF_S = TW_TIME_S_L – TW_TIME_S_R).
3. If the absolute value of the date-time difference is greater than 1 second, exit without producing a result.
4. Otherwise, compute the first TW arrival time for each relay in nanoseconds (e.g., TW_TIME_NS_L and TW_TIME_NS_R) as FILTWMS • 10^6 + FILTWUS • 10^3 + FILTWNS.
5. Compute the first TW arrival time difference in nanoseconds, including the date-time difference (e.g., TW_DIFF_NS = TW_DIFF_S • 10^9 + (TW_TIME_NS_L – TW_TIME_NS_R))
6. If the absolute value of the arrival time difference in nanoseconds is greater than TWLPT in nanoseconds (e.g., TWLPT_NS), exit without producing a result.
7. Otherwise, compute the fault location with respect to the local terminal (e.g., DETWFL_L = LL • 0.5 • (1+ TW_DIFF_NS/TWLPT_NS)).

C. Transient Records With 1 MHz Sampling

The UHS relay stores ultra-high-resolution transient records (MHR IEEE COMTRADE record, 1 MHz sampling) that contain voltage and current samples with 18 bits of resolution and an effective measurement bandwidth of about 400 kHz. Event analysis software is available that allows the user to open the MHR IEEE COMTRADE record and plot the voltage and current signals. The software makes available the modal TW signals (ground, alpha, and beta Clarke components), which are described in Section III.B. The software also provides time cursors that replicate the interpolation method described in Section III.C. Therefore, the time stamp of the initial TW at each terminal may be obtained by opening the corresponding MHR IEEE COMTRADE record in the event analysis software, plotting the appropriate modal TW signal for the fault type, and sliding the time cursor to line up with the peak of the initial TW. It is important to note that this time stamp does not include compensation for the TW CT cable delay. Fig. 6 shows an example of the signals available in the MHR IEEE COMTRADE record from the UHS relay for an internal BG fault in the REE system, and Fig. 9 shows how the alpha-mode B-phase TW signals may be used to obtain the time stamp of the initial TW that arrived at each end of the line.

V. Offline Methodology

There are two general approaches to the methodology for offline calculations of the DETWFL result: manual calculations and software tools.

A. Manual Calculations

After the necessary TW time stamps are obtained by using one of the methods described in Section IV, they can be applied (along with the LL and TWLPT settings) to (1). If time stamps are retrieved from the First_TW_Time_Local entry in the IEEE COMTRADE header file from each end (Section IV.A) or by using the DNP3 protocol over Ethernet (Section IV.B), the time stamps do not need to be compensated for by the CT cable delay because the UHS relay has already applied the compensation. However, if the time stamps are obtained by using the MHR IEEE COMTRADE records (Section IV.C), the compensation must be applied for the CT cable delay.

B. Software Tools: Bewley Diagram

The event analysis software described in Section IV.C also provides the ability to plot and analyze Bewley diagrams. DETWFL results may be obtained offline by retrieving the MHR IEEE COMTRADE record from each end of the line, opening them in a single session of the event analysis software, and plotting the appropriate modal TW signals in the Bewley diagram. After the time cursors are manually aligned to the initial TW peak at the local and remote ends, the DETWFL results are automatically displayed in an information pane within the software tool. Section VI.A provides an example of how REE used this method to verify the DETWFL results for an internal BG fault in their system and includes the Bewley diagram used for the analysis (see Fig. 10).

VI. Field Experience

In December 2019, the 220 kV, 61.98 km line between the Casaquemada and Onuba terminals (described in Section II.B.3) did not have relay-to-relay communications in place, making the DETWFL results unavailable for automatic calculation by the UHS relays. However, both UHS relays were connected to a high-accuracy IRIG-B time source.

A. Internal BG Fault, December 8, 2019

For this fault event, the pair of UHS relays detected an internal B-phase-to-ground fault while monitoring the line. Since the relays were synchronized to absolute time, the DETWFL results could be obtained using the offline methods described in Section V. REE calculated the DETWFL result for the Casaquemada terminal to be 27.045 km. This was corroborated by the SEZFL and SETWFL results, which were 24.220 km and 26.728 km, respectively.

The event report data in Fig. 6 were used to evaluate the UHS relay line protection, which uses elements and schemes based on incremental quantities and TWs [1]. Fig. 6 shows the voltage and current signals sampled at 1 MHz by the UHS relay at the Casaquemada terminal. Fig. 6 also shows the performance of the incremental-quantity directional forward (TD32F) element and incremental-quantity ground distance (TD21G) element, which operated in 1.29 ms and 9.09 ms, respectively. In the UHS relay at the Onuba terminal, the TD32F and TD21G elements operated in 1.29 ms and 9.69 ms, respectively.

As described in Section IV.A, the HDR file of the TDR and MHR IEEE COMTRADE records from the UHS relay contains fault location results for all four available methods. Fig. 7 shows the fault location results from the UHS relay at Casaquemada, and Fig. 8 shows the results from the UHS relay at Onuba.

REE calculated the DETWFL results manually using data available in the event records from both terminals. The First_TW_Time_Local value in Fig. 7 and Fig. 8 indicates the arrival time of the initial TW at each end, respectively. These arrival times are compensated for by the TWCPT setting in each relay. Comparing these arrival times shows that the UHS relay at Casaquemada was the first to detect a TW, which indicates the fault was closer to that terminal. Furthermore, the first TW arrived at Casaquemada 26.798 µs before the first TW arrived at Onuba.

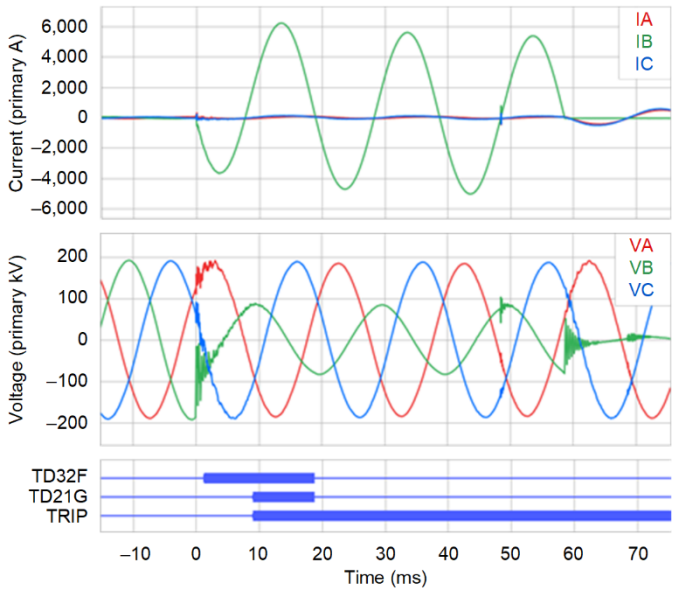

Fig. 6. Casaquemada UHS relay event record data showing a B-phase fault.

```
[Fault_Location]
SE_TW_Location1,"26.728(km)"
SE_TW_Location2,"33.168(km)"
SE_TW_Location3,"$$$$$$$(km)"
SE_TW_Location4,"$$$$$$$(km)"
DE_TW_Location,"$$$$$$$(km)"
SE_Z-Based_Location,"24.220(km)"
DE_Z-Based_Location,"$$$$$$$(km)"
First_TW_Time_Local,"2019/12/08,05:06:48.182811650"
First_TW_Time_Remote,"$$$$$$$$"
```

Fig. 7. Fault location information in the HDR file from the UHS relay at Casaquemada.

```
[Fault_Location]
SE_TW_Location1,"3.158(km)"
SE_TW_Location2,"27.738(km)"
SE_TW_Location3,"34.755(km)"
SE_TW_Location4,"38.668(km)"
DE_TW_Location,"$$$$$$$(km)"
SE_Z-Based_Location,"32.081(km)"
DE_Z-Based_Location,"$$$$$$$(km)"
First_TW_Time_Local,"2019/12/08,05:06:48.182838448"
First_TW_Time_Remote,"$$$$$$$$"
```

Fig. 8. Fault location information in the HDR file from the UHS relay at Onuba.

Using (1), REE calculated the DETWFL result for Casaquemada to be 27.045 km, as shown in (3). Note that $t_L - t_R$ is negative in (3) because the fault was closer to Casaquemada.

$$M = \frac{61.98}{2}\left(1 + \frac{-26.798}{210.50}\right) \qquad (3)$$
$$M = 27.045 \text{ km}$$

Similarly, REE used (1) to calculate the fault location from the Onuba terminal. Since the fault was closer to Casaquemada, $t_L - t_R$ is a positive number when performing the calculation with respect to Onuba, and the result is 34.935 km.

Fig. 9 shows the B-phase alpha-mode current TWs captured by the UHS relays (available in the MHR IEEE COMTRADE record) at the local and remote terminals, Casaquemada (black) and Onuba (blue), respectively, and it displays the relative arrival time difference between the first TWs at each end (–27.037 µs). For this application, the TWCPT setting at Casaquemada and Onuba is 0.238 µs and 0.477 µs, respectively. When compensation for TWCPT is applied to the time stamps determined in Fig. 9, the same arrival time difference used in (3) is obtained: –27.037 – (0.238 – 0.477) µs = –26.798 µs. Fig. 9 also shows that both TWs are in phase (i.e., both have negative polarity), as we would expect for an internal (on-the-line) event or fault.

The Bewley diagram in Fig. 10 shows the time and distance relationship of the measured B-phase alpha-mode current TWs for the local and remote terminals, Casaquemada (black) and Onuba (blue), respectively, and it shows the first TW that arrived at each terminal, along with the subsequent reflections. This view is obtained after aligning the time cursors to the initial TW peaks for each end (green and red, respectively). The fault location provided by the software in the information pane on the left side of Fig. 10 matches the result of the manual calculations shown in (3).

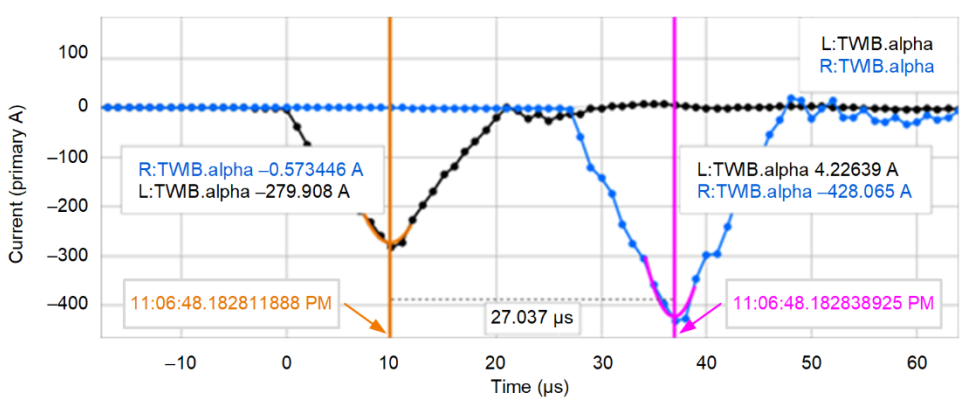

Fig. 9. B-phase alpha-mode current TWs captured by UHS relays (available in the MHR IEEE COMTRADE record) at the local and remote terminals, Casaquemada (L, black) and Onuba (R, blue), respectively, including the arrival times of first TWs at each end.

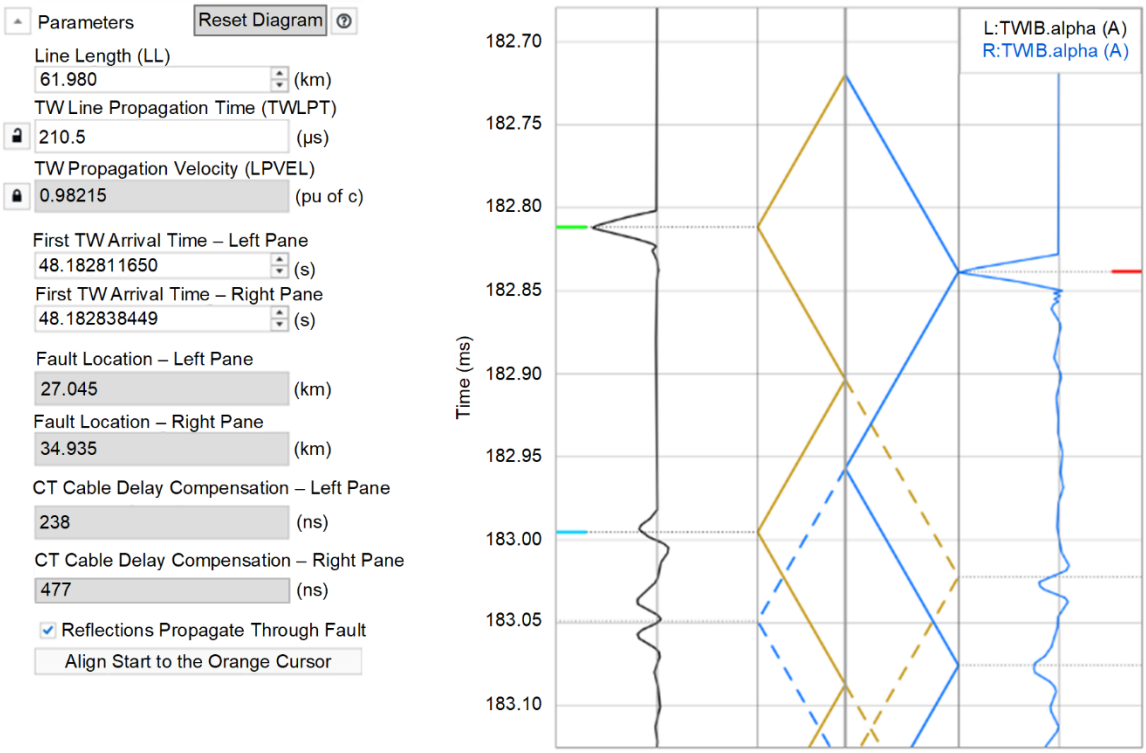

Fig. 10. Bewley diagram showing B-phase alpha-mode current TWs for the local and remote terminals, Casaquemada (L, black) and Onuba (R, blue), respectively.

The offline DETWFL results calculated by REE differed from the SETWFL results in Fig. 7 and Fig. 8 by 317 m (1,040 ft) and 180 m (591 ft), respectively. The SETWFL and SEZFL results corroborated the DETWFL results REE obtained from the Bewley diagram and by manual calculation. Using the results of this analysis, REE's maintenance team inspected the circuit and found evidence of the fault at a tower located 26.943 km from Casaquemada (35.009 km from Onuba). Identification of the true fault location confirmed that the results obtained from the Bewley diagram in Fig. 10 and from manual calculations were within one tower span from either end: 102 m from Casaquemada and 74 m from Onuba.

B. Summary of Results

A summary of five fault events, including the event described in Section VI.A, is provided in Table I. It includes fault location results on the Casaquemada-to-Onuba line while relay-to-relay communications were not available. The tabulated results include the following:

- SEZFL, provided by the distance relays protecting the line.
- SETWFL, provided by the UHS relays monitoring the line.
- DETWFL, obtained from UHS relays using the offline calculation methods explained in this paper.
- The location of the tower where the fault was confirmed.

Table I shows that the offline DETWFL method provided results that were accurate to within one tower span for all five faults that occurred on this line while relay-to-relay communications were unavailable. Having these accurate results allowed line crews to quickly identify the cause of the fault and restore the line to service. Fig. 11 shows an example in which evidence of the December 17, 2019 fault was found, confirming the fault location and showing that bird contamination was the likely cause.

Fig. 11. Evidence found of the December 17, 2019 fault, showing bird contamination and arcing across the insulators.

TABLE I
SUMMARY OF FAULT LOCATION RESULTS FOR THE 220 KV, 61.98 KM OVERHEAD TRANSMISSION LINE BETWEEN THE CASAQUEMADA AND ONUBA TERMINALS

Event Date	Fault Type	Terminal	SEZFL		SETWFL		DETWFL		Tower Location (km)
			Result (km)	Error (km)	Result (km)	Error (km)	Result (km)	Error (km)	
Nov 29, 2019	BG	Casaquemada	30.573	3.294	33.449	0.418	33.872	0.005	33.867
		Onuba	25.332	2.753	28.212	0.127	28.108	0.023	28.085
Dec 08, 2019	BG	Casaquemada	24.220	2.723	26.728	0.215	27.045	0.102	26.943
		Onuba	32.081	2.928	34.755	0.254	34.935	0.074	35.009
Dec 17, 2019	BG	Casaquemada	25.922	3.115	28.758	0.279	29.138	0.101	29.036
		Onuba	29.825	3.091	32.714	0.202	32.842	0.074	32.916
Dec 26, 2019	BG	Casaquemada	55.398	4.033	33.153	26.278	59.210	0.221	59.431
		Onuba	2.154	0.367	2.505	0.016	2.770	0.249	2.521
Jan 01, 2020	BG	Casaquemada	30.447	3.420	33.343	0.524	33.908	0.041	33.867
		Onuba	25.162	2.923	27.918	0.167	28.072	0.013	28.085

VII. CONCLUSION

UHS transmission line protective relays include built-in TW-based fault-locating methods that are accurate to within a tower span (300 m; 1,000 ft), regardless of the line length. Having accurate fault location results allows for improved system operations by reducing patrol and repair time, and they help minimize costs by aiding in the detection of problematic areas of the line so reoccurring faults can be reduced.

Since 2019, REE has been gaining experience with UHS relays for TW-based fault locating and adaptive autoreclosing on hybrid lines with relay-to-relay communications. This paper presents REE's experience with performing offline calculations using the DETWFL method when relay-to-relay communications were not yet available on one of the lines where the new technology was being evaluated. Analysis of the results verifies that the accuracy was within one tower span for this line, providing confidence for REE to continue moving forward with the SIFOV project.

Methods for obtaining DETWFL results using offline calculations and software tools (such as the Bewley diagram available in event analysis software) are described, as well as requirements for time-stamping TWs and options for obtaining the time stamps using manual and automated protocol-based methods.

Fault location data recorded during five faults on an REE transmission line confirmed that DETWFL results could be obtained using an offline methodology when relay-to-relay communications were not available, providing REE with results that were accurate to within a tower span.

The offline calculated DETWFL result can be used to confirm the SETWFL result(s), help select the correct alternative result, or provide a TW-based result when the results from other fault-locating methods are not available.

VIII. APPENDIX

Obtaining successful results from the DETWFL method, including when relay-to-relay communications were not available, has motivated REE to continue evaluating UHS relays based on the project drivers described in Section II.A. The ability of the UHS relay to automatically provide DETWFL results and allow for adaptive autoreclosing control requires that relay-to-relay communications be available. This section describes the telecommunications infrastructure that is now in place for the N. Valladolid-to-Mudarra line and Casaquemada-to-Onuba line.

A. Telecommunications Infrastructure for the N. Valladolid-to-Mudarra Line, 220 kV, 24.27 km

Fig. 12 shows the telecommunications infrastructure deployed for this line. To make an efficient use of the available fiber optics and communications equipment, REE decided to use passive optical multiplexers. For the length of this line, passive multiplexers were sufficient to satisfy the distance limitations of the SDH equipment. These multiplexers receive two signals:

1. A 1,550 nm wavelength fiber-optic signal from the direct-fiber port of the UHS relay.
2. A 1,310 nm wavelength fiber-optic signal from the SDH equipment connected to a multiplexed-fiber port on the UHS relay.

The passive optical multiplexers introduce both signals into a single fiber-optic channel for transmission to the other terminal. The demultiplexers at both sides decouple the received signals and distribute them to the appropriate ports of the UHS relay.

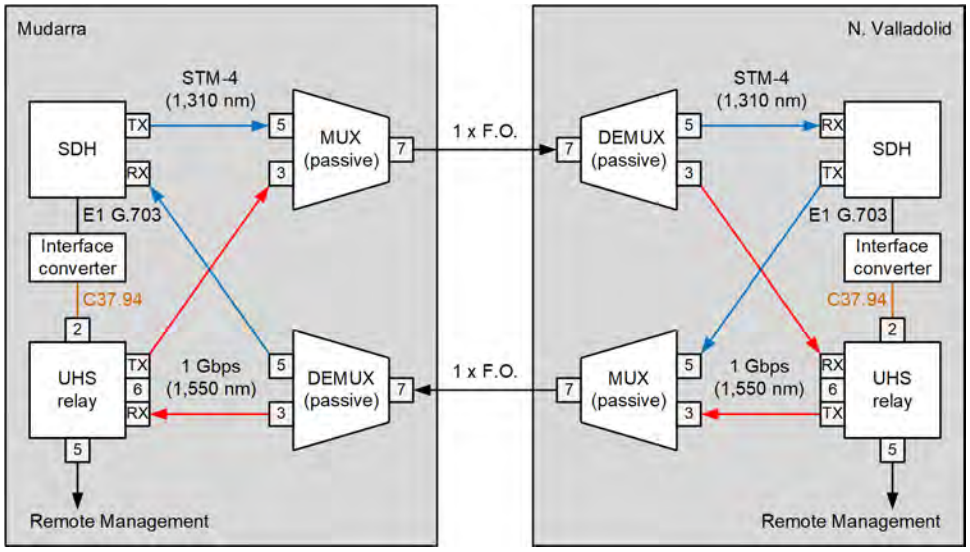

Fig. 12. Telecommunication infrastructure between Mudarra and N. Valladolid terminals using passive optical multiplexers/demultiplexers (MUX/DEMUX).

B. Telecommunications Infrastructure for Casaquemada-to-Onuba Line, 220 kV, 61.98 km

Fig. 13 shows the telecommunications infrastructure deployed for this line. To accommodate the distance limitations of the SDH equipment for the length of this line, REE decided to apply active optical multiplexers. These active multiplexers use optical principles similar to the passive multiplexers employed on the N. Valladolid-to-Mudarra line, but they also include electronics to amplify the signals before introducing them in the fiber-optic channel. The active multiplexers receive two signals of 1,310 nm, one from the direct-fiber port of the UHS relay, and the second from the SDH equipment connected to a multiplexed-fiber port on the UHS relay. The active optical multiplexers introduce both signals into a single fiber-optic channel for transmission to the other terminal.

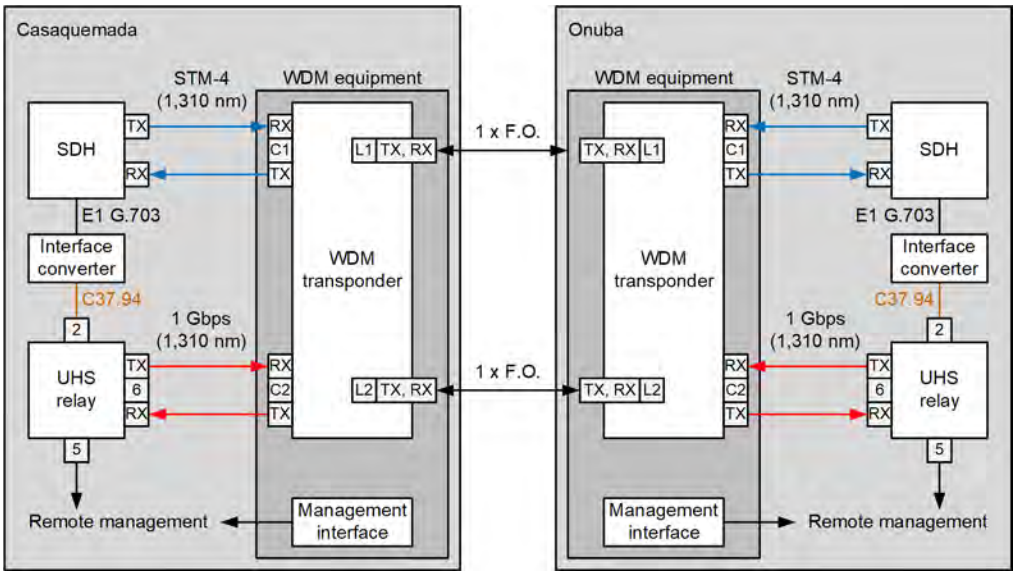

Fig. 13. Telecommunication infrastructure between the Casaquemada and Onuba terminals using active optical multiplexers

IX. References

[1] *SEL-T400L Time-Domain Line Protection Instruction Manual*. Available: selinc.com/products/T400L/docs/.

[2] B. Kasztenny, A. Guzmán, M. V. Mynam, and T. Joshi, "Locating Faults Before the Breaker Opens – Adaptive Autoreclosing Based on the Location of the Fault," proceedings of the 44th Annual Western Protective Relay Conference, Spokane, WA, October 2017.

[3] A. Guzmán, B. Kasztenny, Y. Tong, and M. V. Mynam, "Accurate and Economical Traveling-Wave Fault Locating Without Communications," proceedings of the 44th Annual Western Protective Relay Conference, Spokane, WA, October 2017.

X. Biographies

David López Corton received his Master's Degree in Industrial Engineering, specialty Electrical Engineering, by the Polytechnique University of Madrid (UPM), Spain. In 2009, he joined Red Eléctrica de España (REE), the Spanish TSO, as dispatcher of the national control room. In 2013, he moved to the System Security Department of REE, where he currently coordinates the Testing and Calibration Laboratory, being responsible for protection testing, qualification of new protection equipment, validation of protection and automation schemes, disturbance root cause analysis, and metrology. His research interests are protection equipment, metrology, power quality, and renewable energies integration.

Jorge Vaquero Melado received his Master's Degree in Industrial Engineering specializing in Electrical Engineering from the University of Valladolid (UVA), Spain. In 2004 he joined Red Eléctrica de España (REE), Spanish TSO, as a protection engineer in the System Security Department. In 2016, he became the head of the department, where he is responsible for the Testing and Calibration Laboratory, relay configuration, protection of the electrical system, and incident analysis. His research interests are the protection of electrical systems, protection and renewable energies, wide-area adaptive protection systems, and analysis of electrical systems.

Jesus Cruz received his BS degree in electrical engineering in 2010 from the Polytechnic University of Madrid. His final project, which involved protection relays applied to transmission lines, developed his interest in protecting power systems. From 2010 to 2015, he worked for the engineering department in ZIV Automation, providing technical support, configuration, testing, and training on protection and control equipment. Since 2015, he has been an application engineer at Schweitzer Engineering Laboratories (SEL), providing technical assistance and developing solutions for European customers.

Richard D. Kirby, is a senior product sales manager at Schweitzer Engineering Laboratories, Inc. (SEL) in Houston, Texas. His current focus is ultra-high-speed transmission line protection technology. He is a registered Professional Engineer in Arkansas, Louisiana, Michigan, Oklahoma, and Texas. He has 28 years of diverse electric power engineering experience. He received a BS in engineering from Oral Roberts University in Tulsa, Oklahoma, in 1992, and in 1995, he earned his master of engineering in electric power from Rensselaer Polytechnic Institute in Troy, New York. He is an IEEE Power & Energy Society and Industrial Applications Society senior member.

Yusuf Zafer Korkmaz received his BS in electrical and electronics engineering from the Middle East Technical University, Ankara, Turkey, in 1995. He has worked on protection and control schemes, substation automation and telemetry systems, and generator automatic synchronization systems. In 2013, he joined Schweitzer Engineering Laboratories, Inc. (SEL) where he is presently a senior application engineer. He is a member of the IEEE.

Gianfranco Patti received his BS in electrical engineering from Simón Bolívar University in 2013 and specialized in distribution and transmission electrical systems at University of the Andes in 2015. For four years, he worked on projects in Colombia that involved the design, construction, and operation of power systems, specifically for oil fields and generation plants. In 2018, he joined Schweitzer Engineering Laboratories, Inc. (SEL) as an application engineer, which has allowed him to expand his knowledge, particularly in protection and control systems.

Greg Smelich earned a BS in mathematical science in 2008 and an MS in electrical engineering in 2011 from Montana Tech of the University of Montana. Greg began his career at Schweitzer Engineering Laboratories, Inc. (SEL) as a protection application engineer, where he helped customers apply SEL products through training and technical support, presented product demonstrations, worked on application guides and technical papers, and participated in industry conferences and seminars. In 2016, Greg transitioned to the SEL Research and Development group as a product engineer, where he now helps guide product development, training, and technical support related to time-domain technology. He has been a certified SEL University instructor since 2011 and an IEEE member since 2010.

© 2021 by Red Eléctrica de España and
Schweitzer Engineering Laboratories, Inc.
All rights reserved.
20210312 • TP7002-01