Testing Transformer Differential Protection in Digital Substations

Use Cases and Results

Authors:
Dinesh Baradi, ABB
Mohit Sharma, Megger
Sughosh Kuber, Megger
Lam Nguyen, Megger

IEEE PES Power & Energy Society

IEEE

Objective

- What – Learning how to perform acceptance testing of SV Based transformer differential relay and understand the challenges and solutions
- Why – Because of standard protocols and digitization in substation
- How – Three test scenarios to compare analog based and SV based transformer differential

Introduction: Traditional Transformer Diff

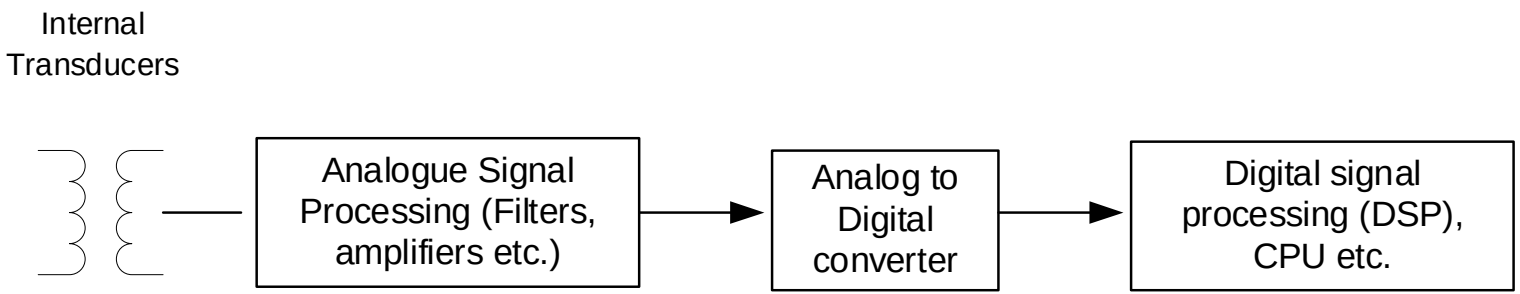

Introduction: Sampled Values Transformer Diff

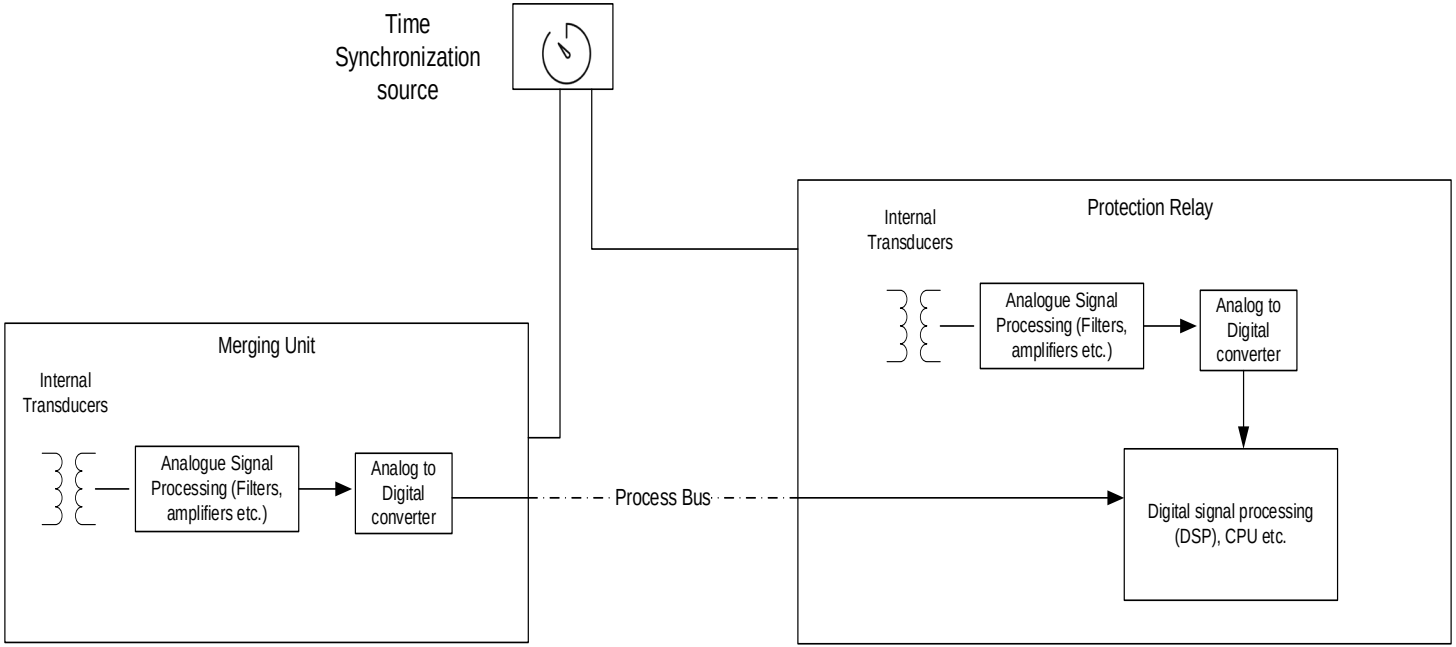

Relay Settings

- Dyn1
- Two-Winding Dual Slope % Restrained Differential
- Minimum Pickup = 5%
- High Set-point = 500%
- Slope-1 = 30%
- Slope-2 = 100%

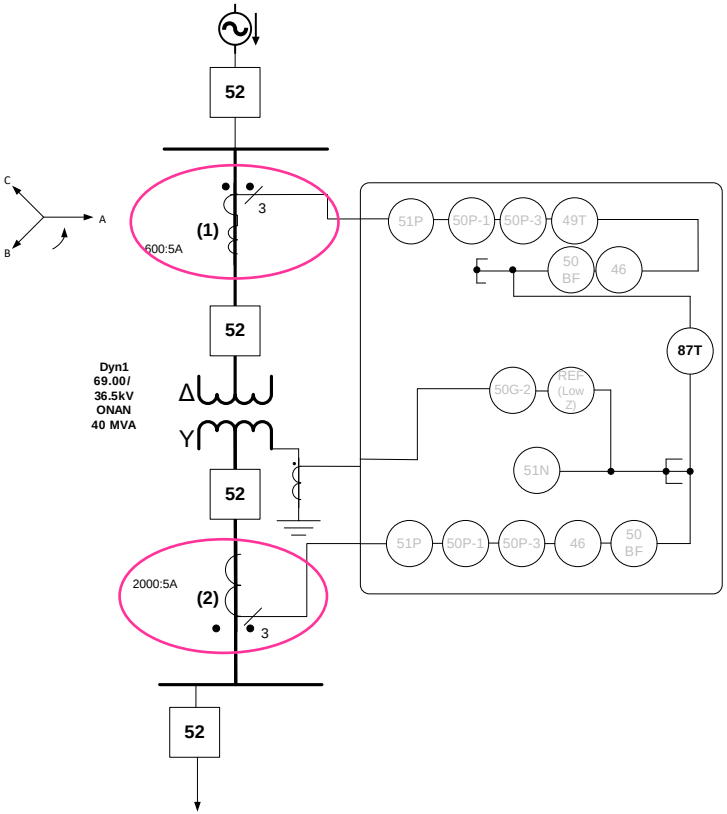

Scenario 2 and 3: SV Based and Hybrid Transformer Diff

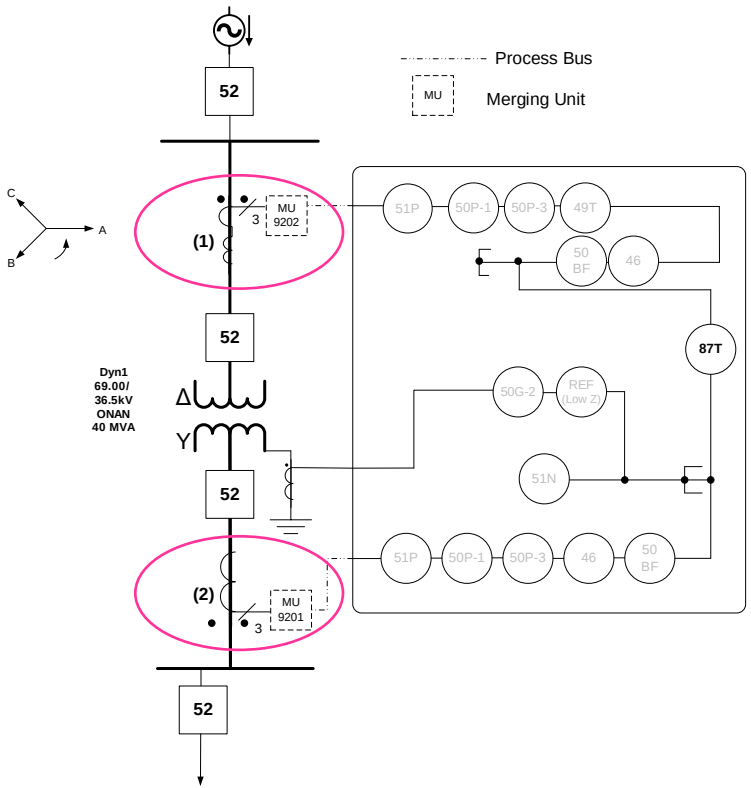

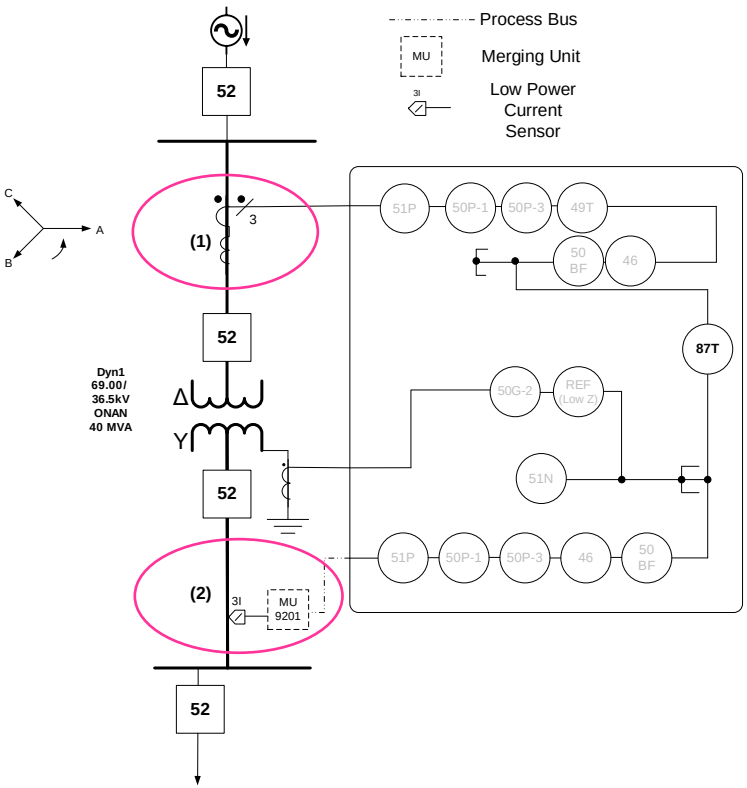

Test Cases

- Low Staged Differential Trip for an in-zone fault
- High Staged Differential Trip for an in-zone fault
- 2nd Harmonic Restraint Element Operation for Inrush

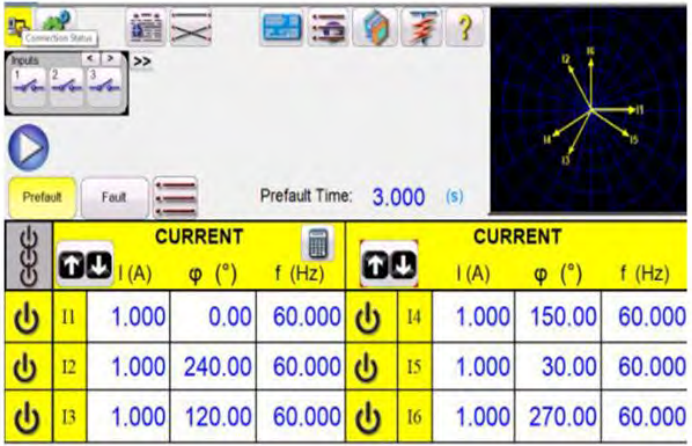

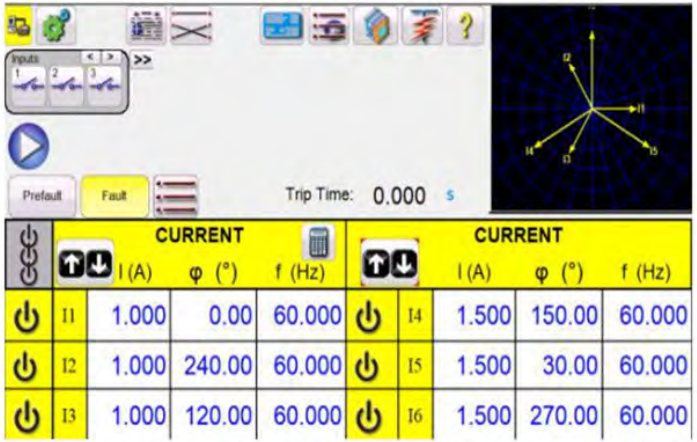

Test Set up : Test Scenario 1

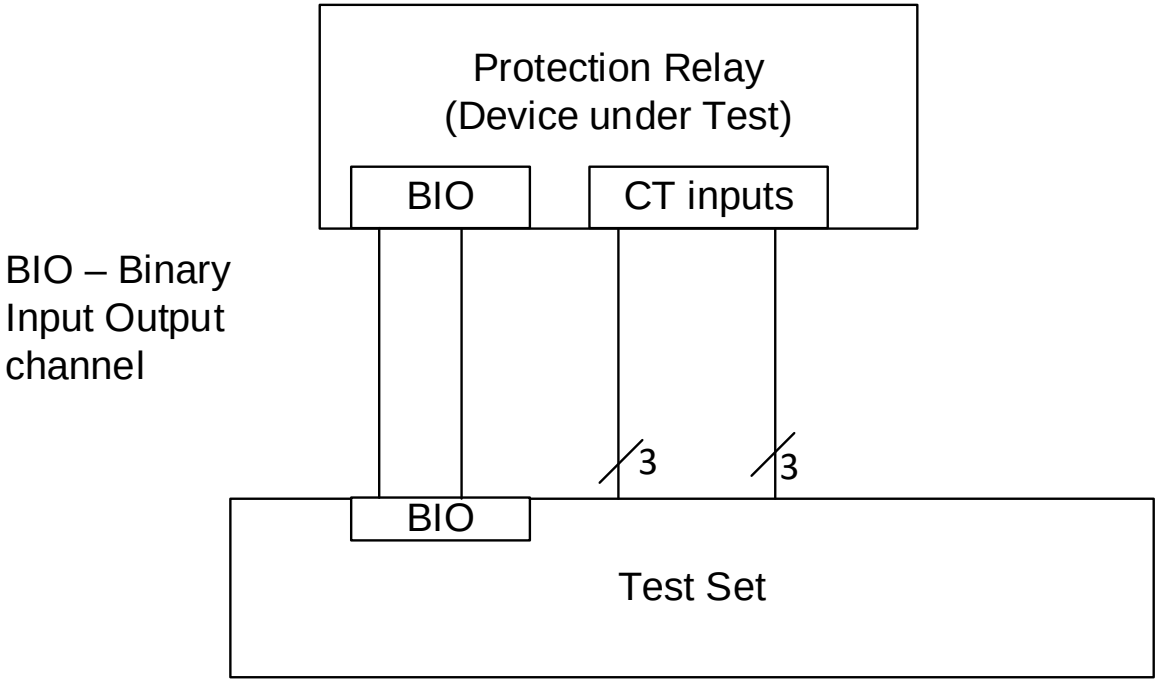

Test Set up : Test Scenario 2

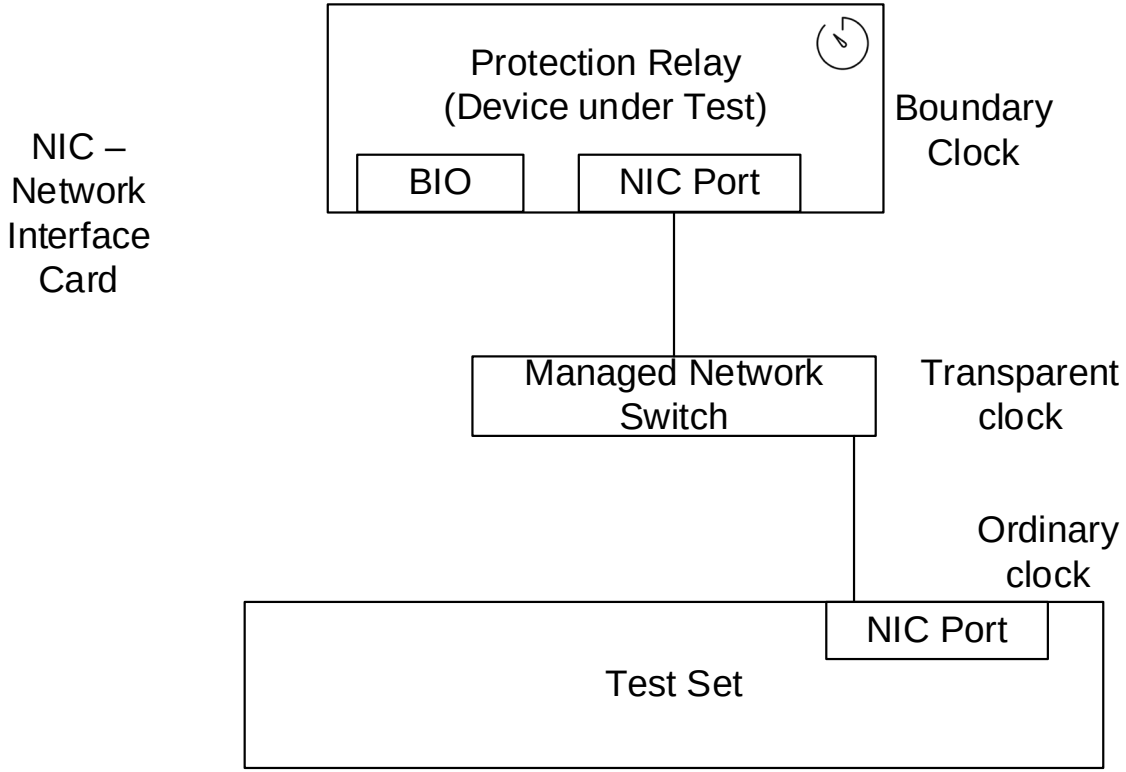

Test Set up : Test Scenario 3

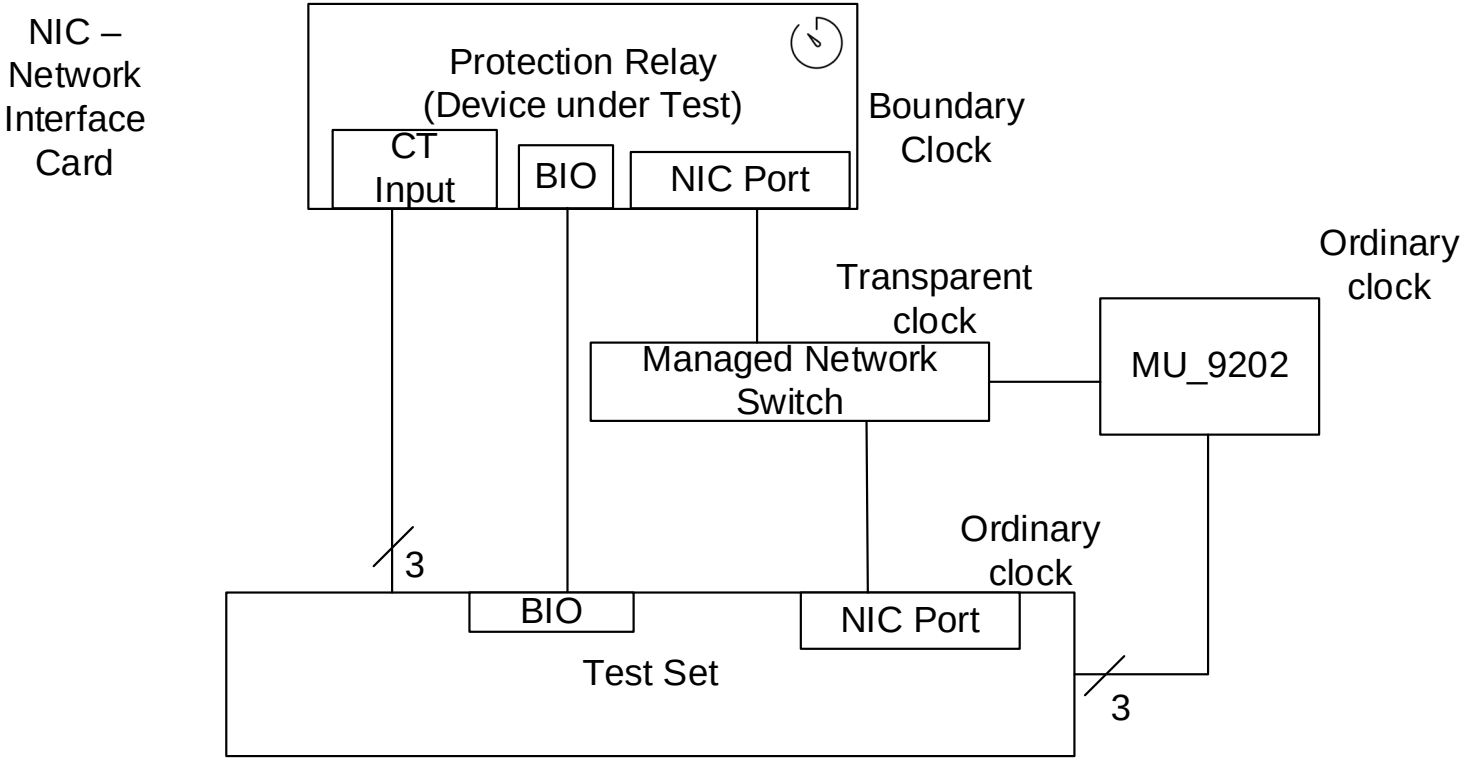

Results : Test Scenario 1

	87T Trip Time (msec)		2nd Harmonic detection (msec)
	Restrained	Unrestrained	
Test 1	25.7	20.1	4.167
Test 2	27.7	20.4	6.25
Test 3	28.1	20.7	6.25
Test 4	24.1	20.4	6.25
Test 5	28.8	19.1	4.167
Average	26.68	20.14	5.41

Results : Test Scenario 2

	87T Trip Time (msec)		2nd Harmonic detection (msec)
	Restrained	Unrestrained	
Test 1	29.5	19.6	5.1
Test 2	28.6	17.6	5.3
Test 3	28.0	19.8	4.9
Test 4	29.9	17.4	4.9
Test 5	30.1	18.2	4.0
Average	29.22	18.52	4.84

Results : Test Scenario 3

	87T Trip Time (msec)		2nd Harmonic detection (msec)
	Restrained	Unrestrained	
Test1	27.1	20.9	8.3
Test 2	28.4	20.6	8.5
Test3	25.6	21.1	7.4
Test 4	27.8	20.9	8.6
Test5	28.5	21.1	7.9
Average	27.48	20.92	8.14

Results : Analysis

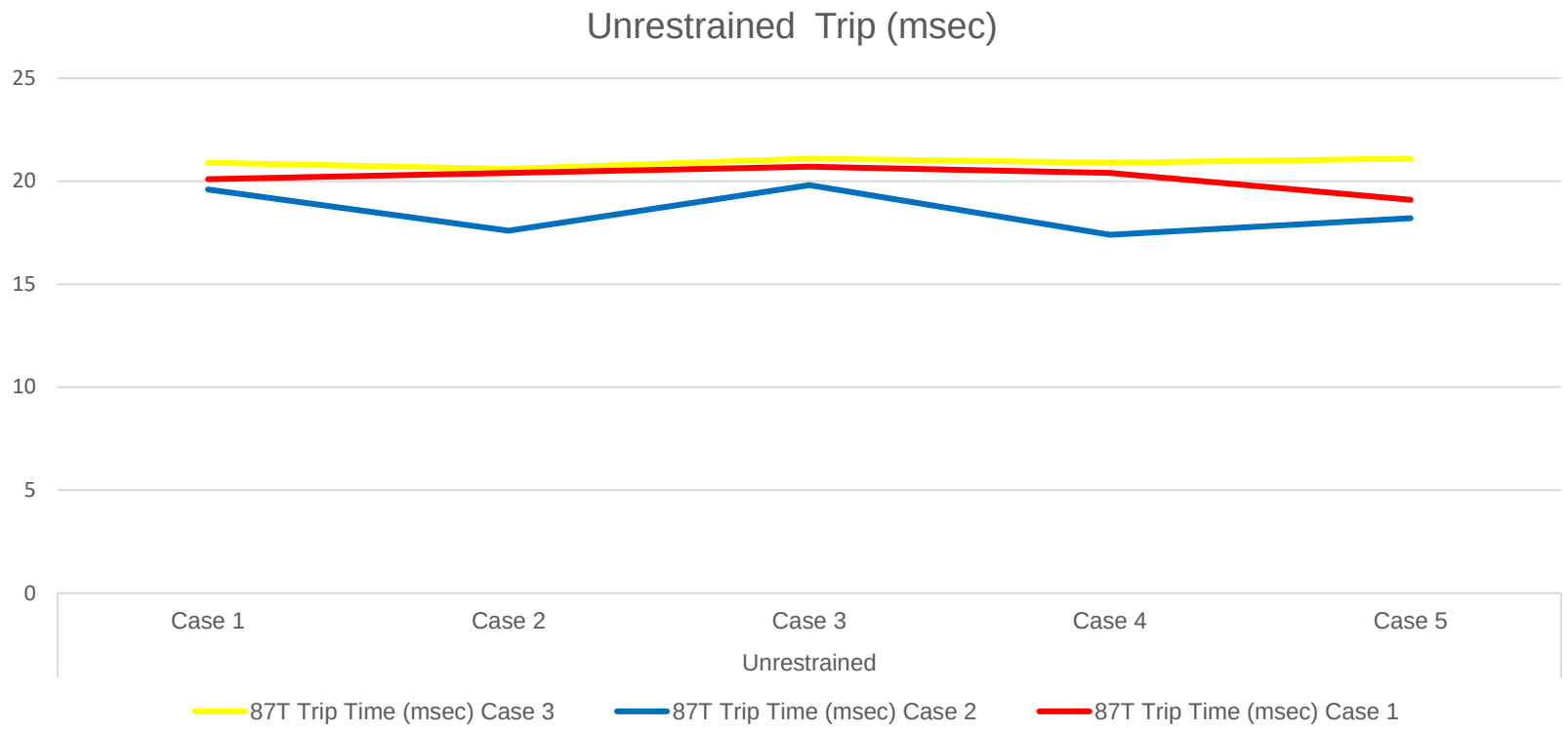
Unrestrained Trip (msec)
25
20
15
10
5
0
Case 1
Case 2
Case 3
Case 4
Case 5
Unrestrained
87T Trip Time (msec) Case 3
87T Trip Time (msec) Case 2
87T Trip Time (msec) Case 1

COMTRADE : Test Scenario 2

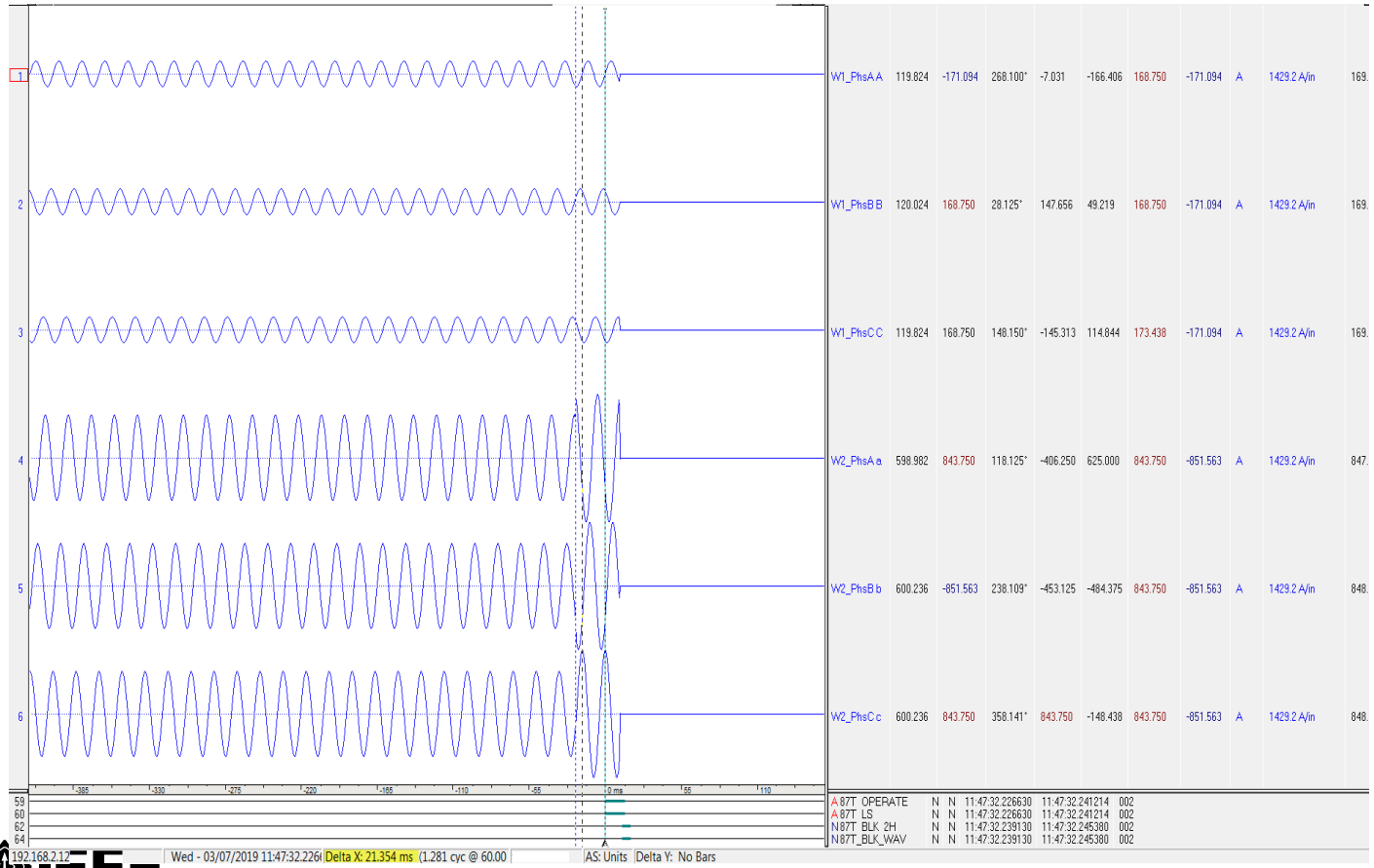

Conclusions

Test Scenario 3: an additional GOOSE data attribute LD0.TR2HPDIF1.Op.general (unrestrained 87T trip) was used for timing tests and results are compared against TR2PTC GOOSE trip

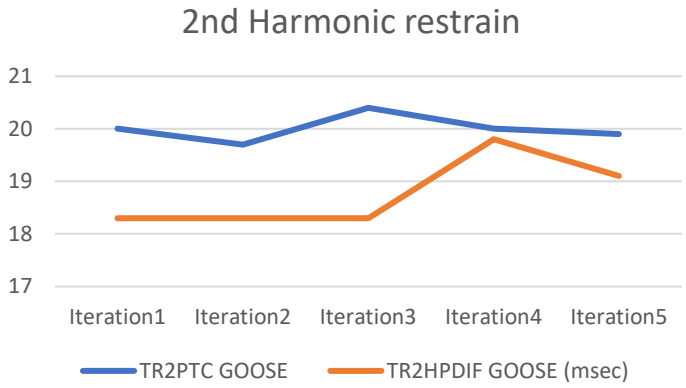

- Performance of the network and redundancy are critical to the overall performance of protection and control systems that are process bus driven

- Per IEEE PES PSRC WG K15 – to clear a fault within 80-100msec; a communication signal must propagate within 5-10msec; these are met when conventional and non-conventional inputs are used.

Questions??