# Simplifying PRC-026 Compliance With Practical Solutions You Least Expect

Pratheek Annamdevula, Austin Thurman, Michael Thompson, Brian Smyth, and Demetrios Tziouvaras
*Schweitzer Engineering Laboratories, Inc.*

© 2021 SEL

## Outline

- Objective of PRC-026
- Attachment criteria
- Power swing detection elements
- Limitations of dual-blinder scheme
- Practical mitigation solutions
- Conclusion

## Objective of PRC-026

"To ensure that load-responsive protective relays are expected to not trip in response to stable power swings during non-fault conditions"

–NERC Standard PRC-026

Applicable Elements

- Phase distance
- Phase overcurrent
- Out-of-step tripping (OST)

Excluded Elements

- Current differential
- Power swing blocking (PSB)
- Elements that do not trip within 15 cycles on load

## Power Swing Detection Elements

## PRC-026-1 Unstable Power Swing Region

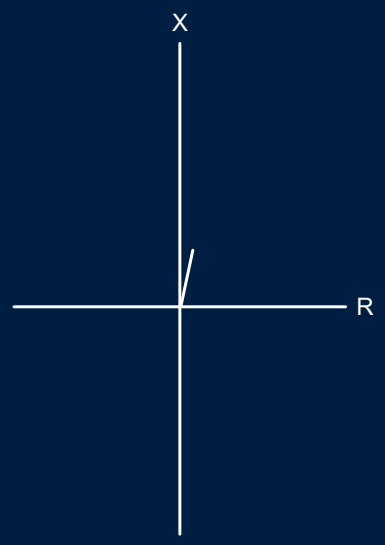


## PRC-026-1 Unstable Power Swing Region

- Upper loss of synchronism

  $E_S / E_R = 1.43$, and $\delta = 0 – 120°$

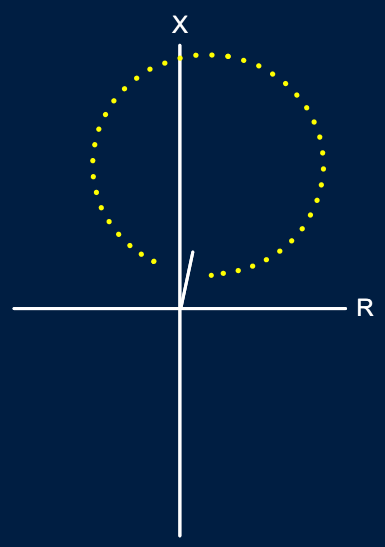

## PRC-026-1 Unstable Power Swing Region

- Upper loss of synchronism

  $E_S / E_R = 1.43$, and $\delta = 0 – 120°$
- Lower loss of synchronism

  $E_S / E_R = 0.7$, and $\delta = 0 – 120°$

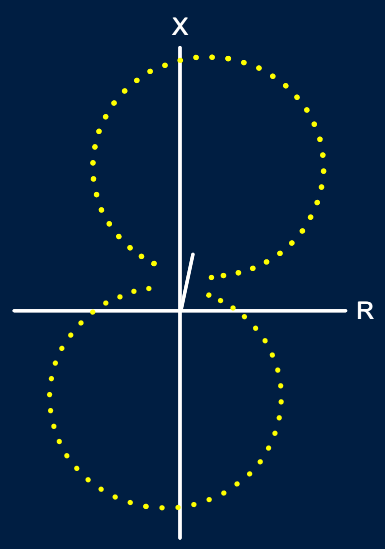


## PRC-026-1 Unstable Power Swing Region

- Upper loss of synchronism

  $E_S / E_R = 1.43$, and $\delta = 0 – 120°$
- Lower loss of synchronism

  $E_S / E_R = 0.7$, and $\delta = 0 – 120°$
- Lens characteristic

  $E_S / E_R = 0.7 – 1.43$, and $\delta = 120°$

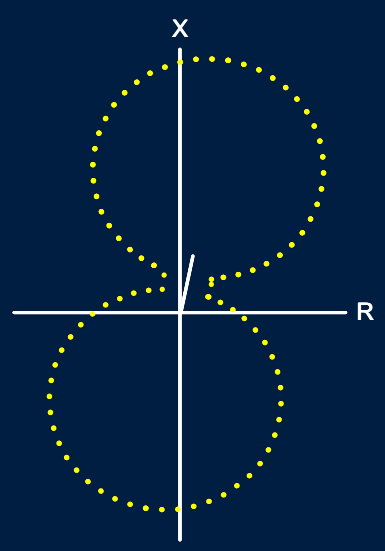

## PRC-026-1 Unstable Power Swing Region

- Upper loss of synchronism

  $E_S / E_R = 1.43$, and $\delta = 0 – 120°$
- Lower loss of synchronism

  $E_S / E_R = 0.7$, and $\delta = 0 – 120°$
- Lens characteristic

  $E_S / E_R = 0.7 – 1.43$, and $\delta = 120°$

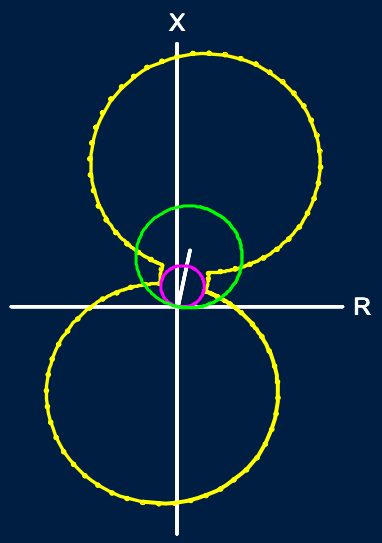


## Desired Response During Power Swings

- Restrain relay operation during stable swings; initiate system separation during unstable swings
- Preventing separation during true out-of-step conditions is detrimental to bulk electric system (BES) reliability
- Ensure some form of OST is in place when PSB is applied in a system

## Blinder-and-Timer-Based Methods

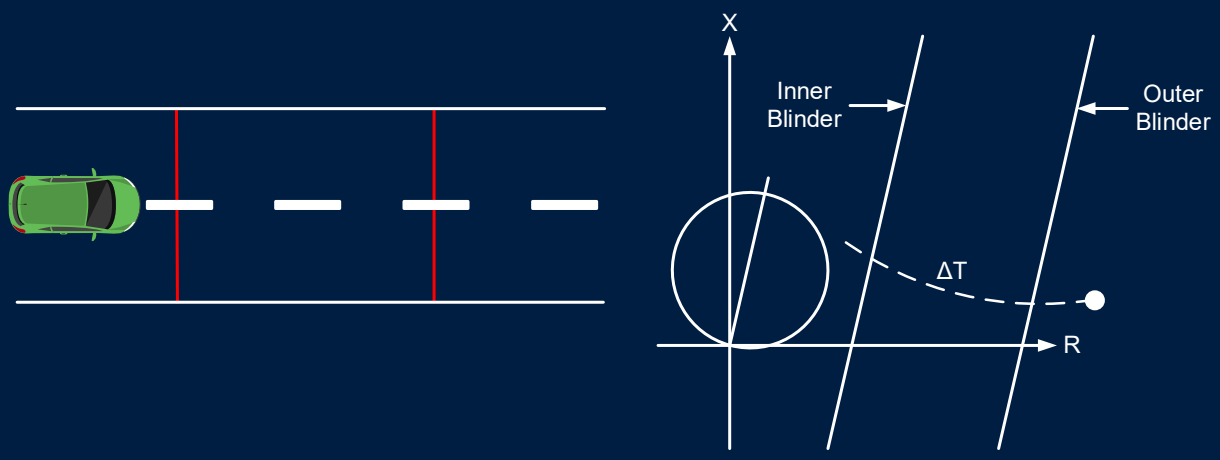


## Blinder-and-Timer-Based Methods

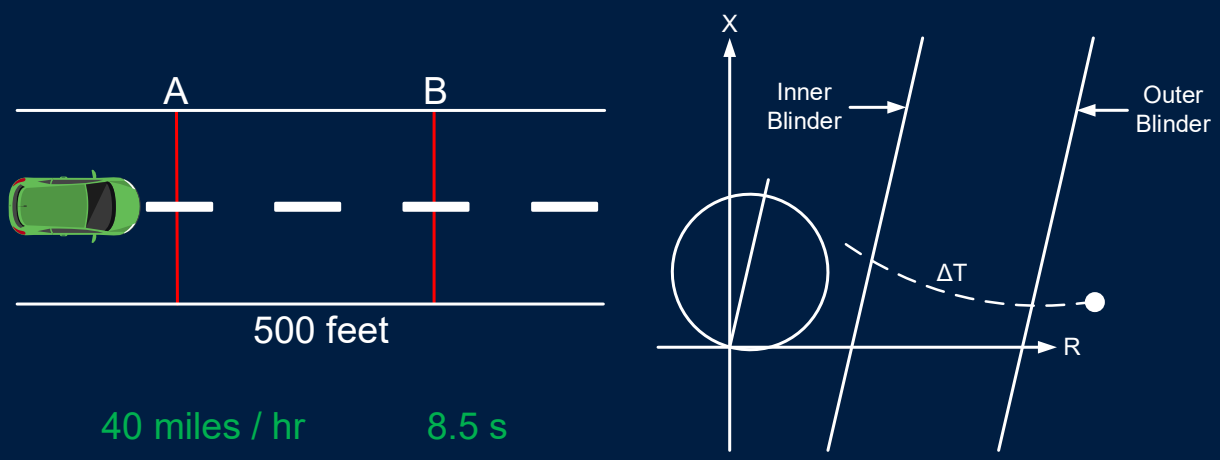


| | |
|---|---|
| 40 miles / hr | 8.5 s |
| 60 miles / hr | 5.7 s |
| 80 miles / hr | 4.3 s |

ΔT > Preset Time = Block

ΔT < Preset Time = Do Not Block

## Continuous Measurement Methods

- Swing-center voltage (SCV) method uses rate-of-change of positive-sequence SCV
- Continuous impedance-rate-of-change measurement method monitors trajectory of impedance in R-X plane
- Continuous operation
- No user settings

## Out-of-Step Tripping

Trip-on-the-way-in (TOWI) initiates a trip when a swing trajectory enters an inner characteristic

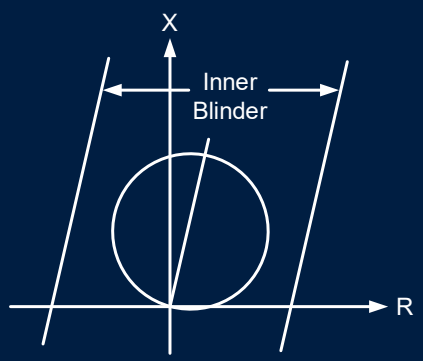


Trip-on-the-way-out (TOWO) tracks the swing trajectory and initiates a trip after a pole slip

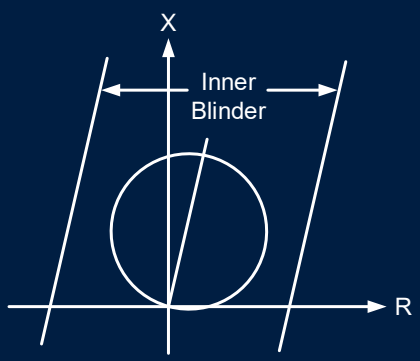

## Out-of-Step Tripping

Trip-on-the-way-in (TOWI) initiates a trip when a swing trajectory enters an inner characteristic

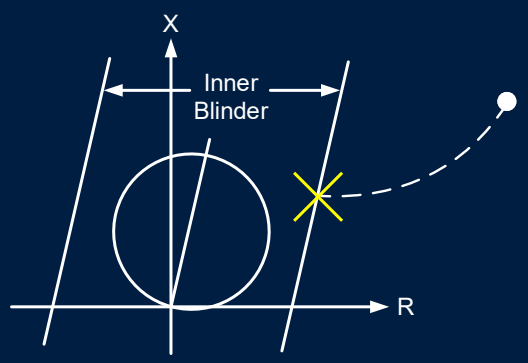


Trip-on-the-way-out (TOWO) tracks the swing trajectory and initiates a trip after a pole slip

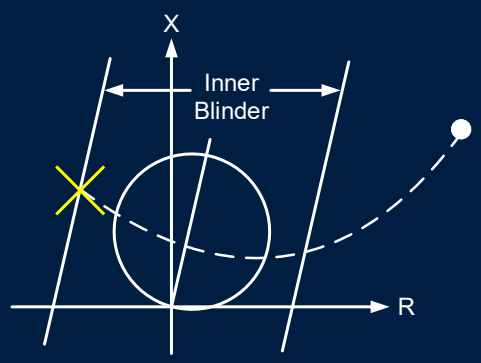


## Dual-Blinder-and-Timer-Based OST Scheme

- Differentiates between stable and unstable swings by swing rate, which is nearly impossible to predict with confidence
- OST trip declared when an impedance enters the inner blinder, even if swing is stable

# Dual-Blinder-and-Timer-Based OST Scheme
## Diagram

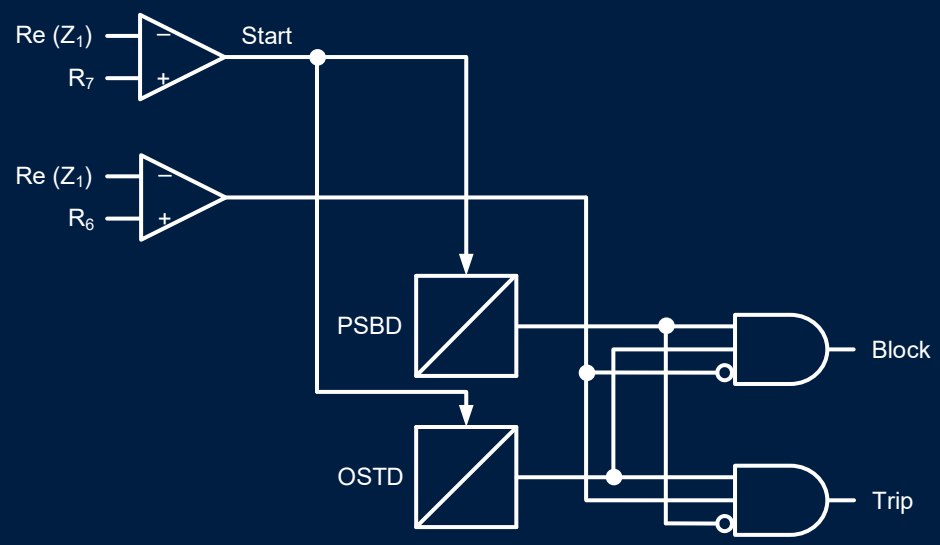


# Dual-Blinder-and-Timer-Based OST Scheme

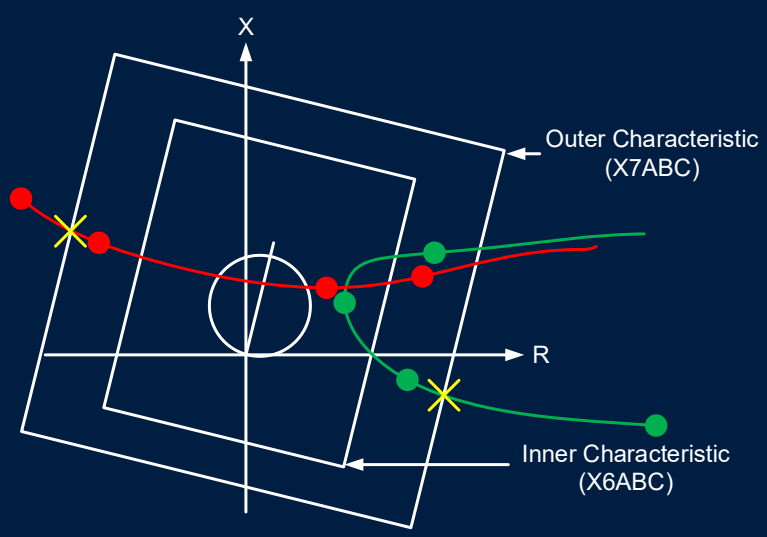


| Unstable Swing | |
|---|---|
| Inner | Outer |
| 0 | 1 |
| 1 | 1 |
| 0 | 1 |
| 0 | 0 |

| Stable Swing | |
|---|---|
| Inner | Outer |
| 0 | 1 |
| 1 | 1 |
| 0 | 1 |
| 0 | 0 |

# OST Function Associated With Continuous Measurement Methods

- Continuous measurement methods track impedance trajectory using blinders
- If a swing traverses from right to left or left to right, it is unstable
- Blinders can be user settable or automatically generated

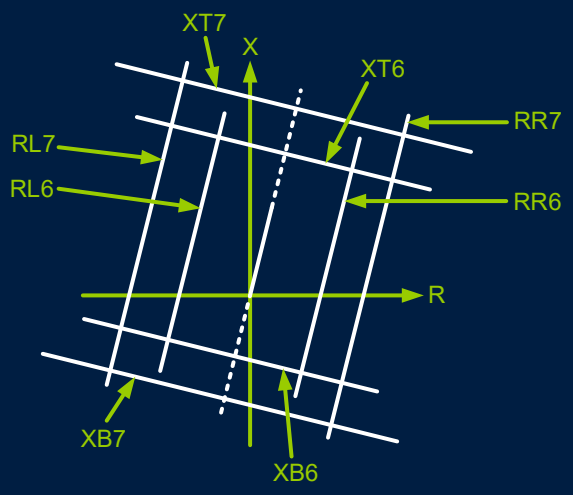


# OST Blinders Associated With SCV

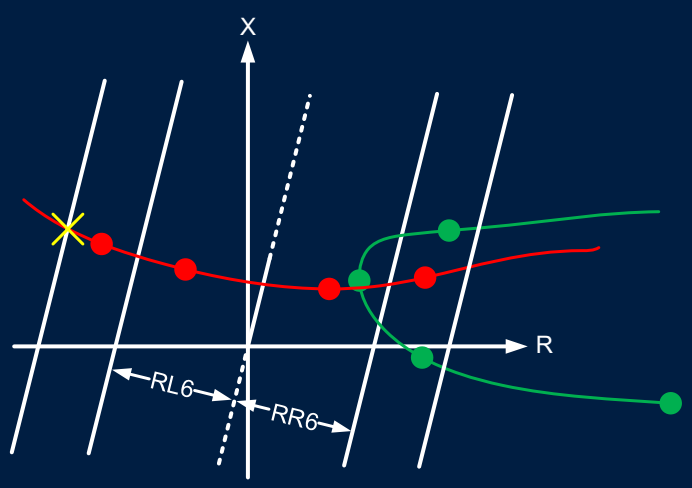


Unstable Swing

| RL6 | RR6 |
|---|---|
| 0 | 0 |
| 0 | 1 |
| 1 | 0 |
| 0 | 0 |

Stable Swing

| RL6 | RR6 |
|---|---|
| 0 | 0 |
| 0 | 1 |
| 0 | 0 |
| 0 | 0 |

# Limitation of Dual-Blinder Scheme as Mitigation Solution

Less space between zones and PRC-023 load point leads to undesirable PSB delay setting

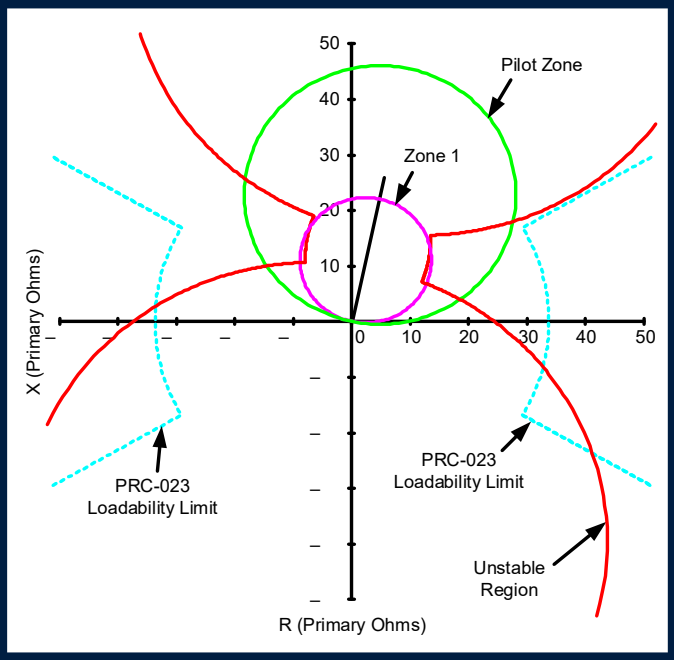


# Limitation of Dual-Blinder Scheme as Mitigation Solution

Inner blinder cannot perform both OST and PSB functions without being at two locations

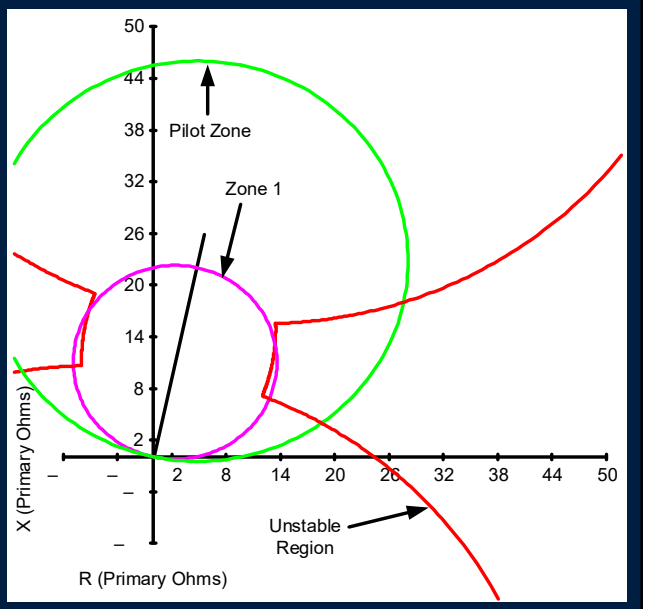

# Limitation of Dual-Blinder Scheme as Mitigation Solution

Inner blinder cannot perform both OST and PSB functions without being at two locations

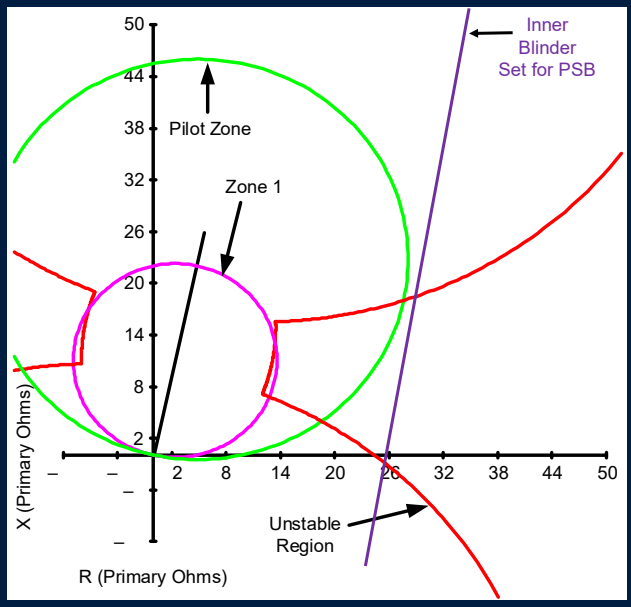


# Limitation of Dual-Blinder Scheme as Mitigation Solution

Inner blinder cannot perform both OST and PSB functions without being at two locations

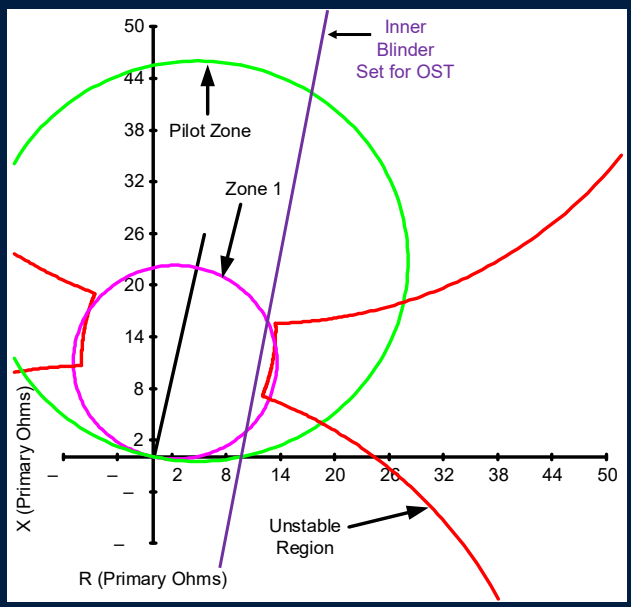

# Limitation of Dual-Blinder Scheme as Mitigation Solution

Inner blinder cannot perform both OST and PSB functions without being at two locations

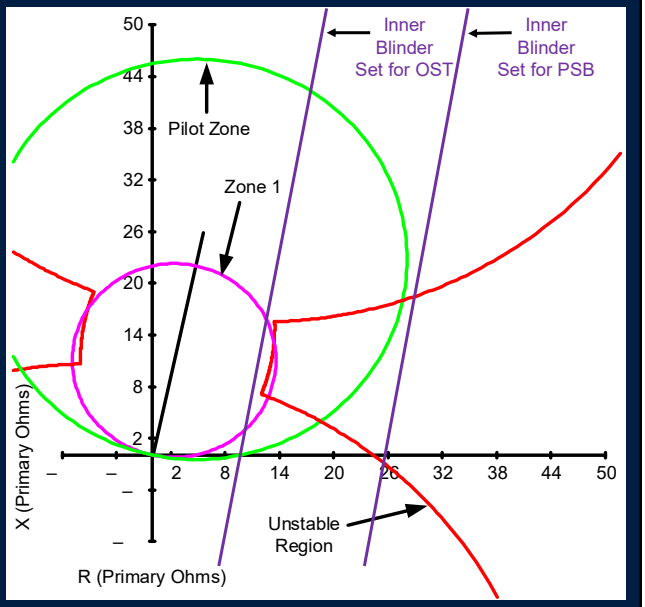


# Practical PRC-026 Mitigation Solutions

Solutions should

- Meet PRC-026 compliance (i.e., be secure to stable power swings)
- Maintain dependable system protection (i.e., tripping to true unstable swings and internal faults)

## Practical PRC-026 Mitigation Solutions

Solutions should

- Meet PRC-026 compliance (i.e., be secure to stable power swings)
- Maintain dependable system protection (i.e., tripping to true unstable swings and internal faults)

Proposed solutions

- Continuous measurement methods
- Load encroachment (LE)
- Triple-blinder OST scheme
- Zone shape modification

## OST Detection Supervised by Continuous Measurement Methods

- Enabling continuous measurement method achieves compliance

## OST Detection Supervised by Continuous Measurement Methods

- Enabling continuous measurement method achieves compliance
- When applied as TOWO, the OST scheme associated with continuous measurement methods is inherently secure to stable swings and dependable to unstable swings

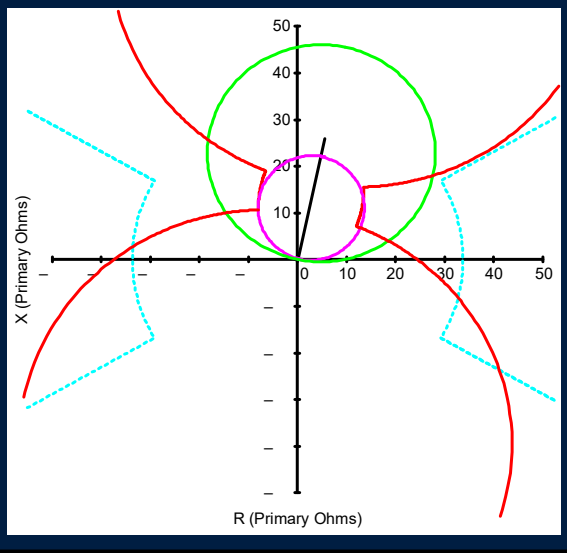


## OST Detection Supervised by Continuous Measurement Methods

- Enabling continuous measurement method achieves compliance
- When applied as TOWO, the OST scheme associated with continuous measurement methods is inherently secure to stable swings and dependable to unstable swings

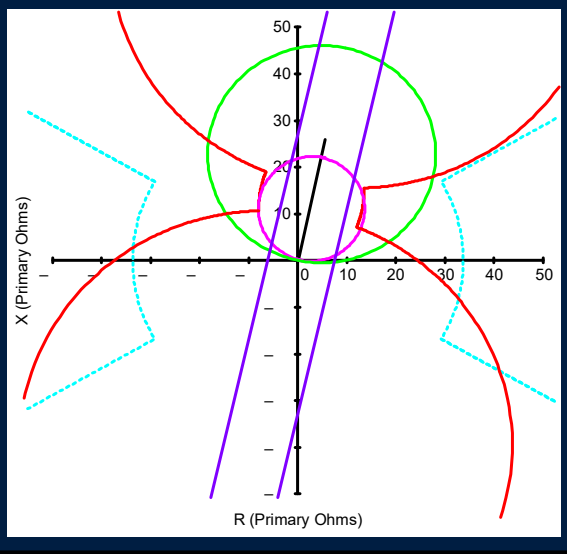

## OST Detection Supervised by Continuous Measurement Methods

- Enabling continuous measurement method achieves compliance
- When applied as TOWO, the OST scheme associated with continuous measurement methods is inherently secure to stable swings and dependable to unstable swings

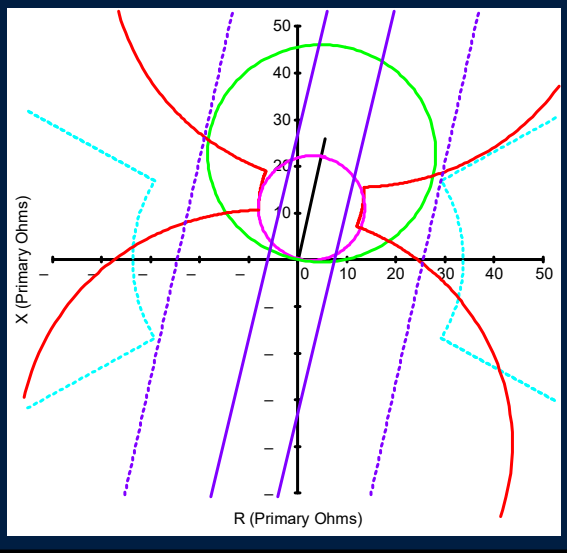


## OST Detection Supervised by Continuous Measurement Methods

- Enabling continuous measurement method achieves compliance
- When applied as TOWO, the OST scheme associated with continuous measurement methods is inherently secure to stable swings and dependable to unstable swings

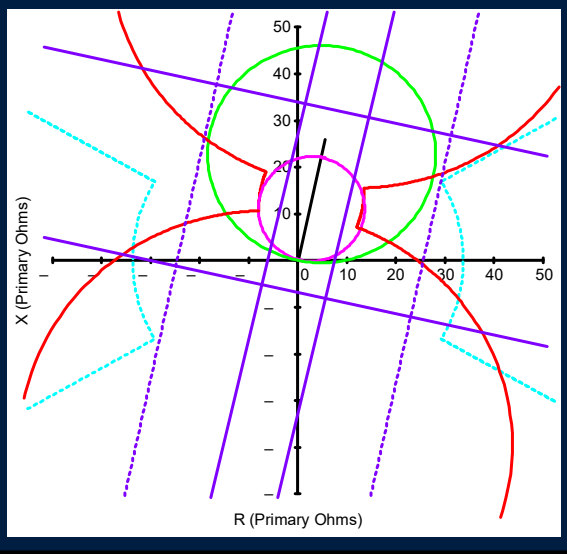

## Continuous Measurement Methods Unavailable

Dual-blinder OST scheme risks trip during initial stage of swing

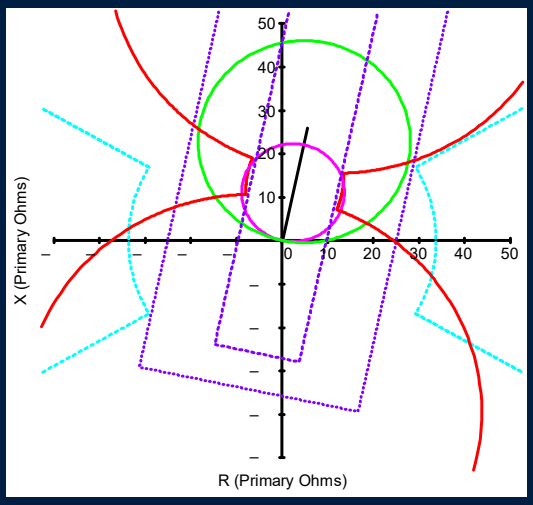


## Load Encroachment Application

- Dual-blinder OST scheme risks trip during initial stage of swing
- LE element measures positive-sequence impedance like most power swing elements

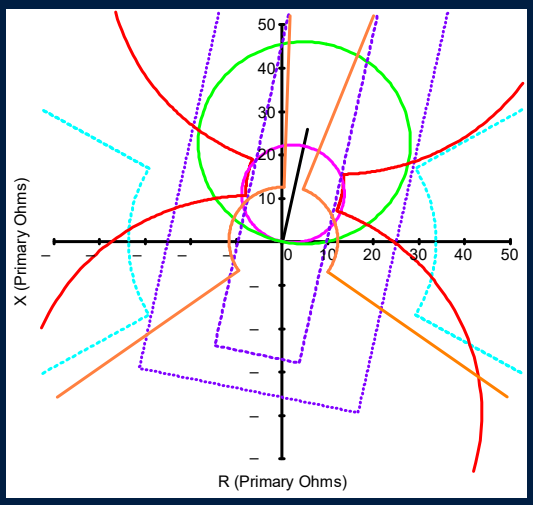

## Load Encroachment Application

- Dual-blinder OST scheme risks trip during initial stage of swing
- LE element measures positive-sequence impedance like most power swing elements
- LE element alone allows the relay to meet compliance

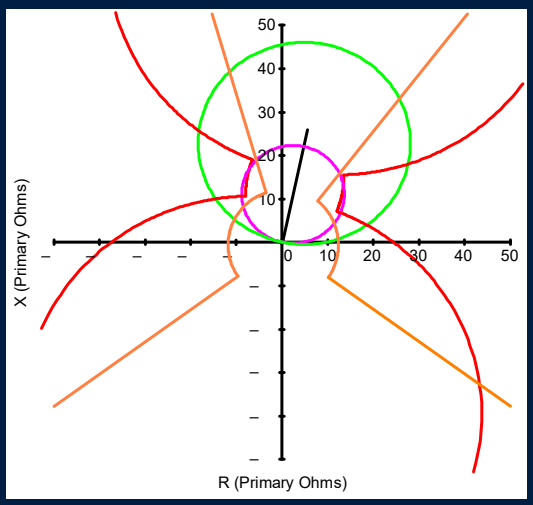


## Load Encroachment Application

- Some LE elements have unblocking feature based on unbalanced ratio factor a2

$$a2 = I2 / I1$$

- Three-phase faults typically do not have significant fault resistance

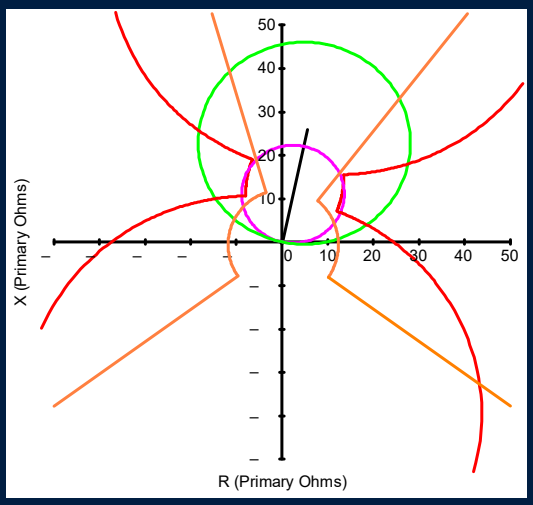

## If LE Application Is Not Feasible

- Inner blinder used for both PSB and OST functions in dual-blinder OST scheme
- Consider decoupling these functions from inner blinder

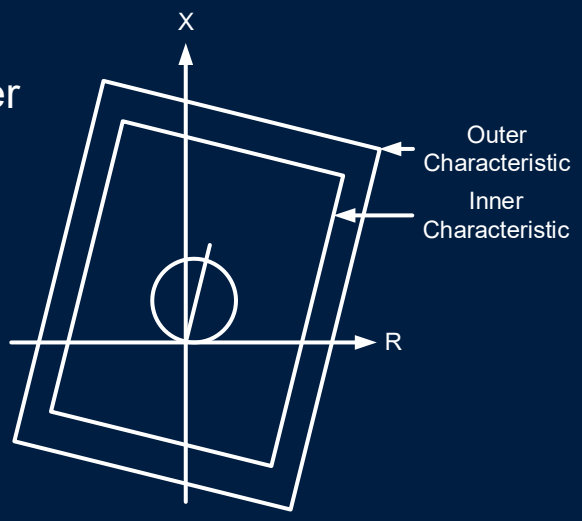


## If LE Application Is Not Feasible

- Inner blinder used for both PSB and OST functions in dual-blinder OST scheme
- Consider decoupling these functions from inner blinder
- Consider a third blinder

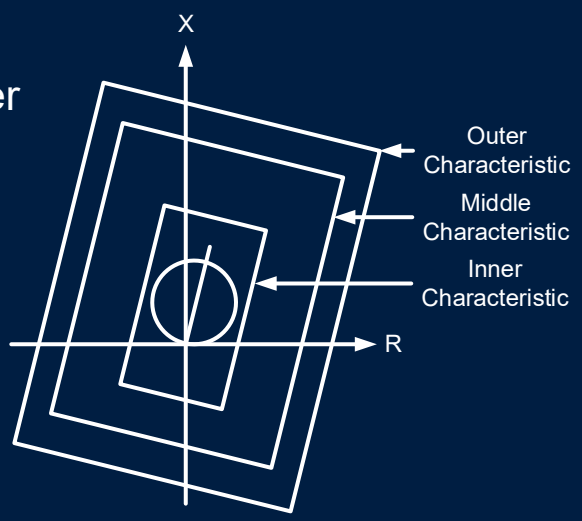

## Triple-Blinder OST Scheme

- Inner blinder used for both PSB and OST functions in dual-blinder OST scheme
- Consider decoupling these functions from inner blinder
- Middle blinder asserts PSB and inner blinder asserts OST

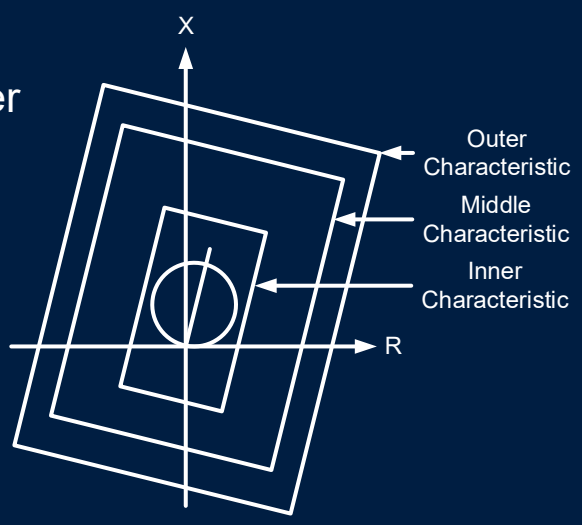


## Triple-Blinder OST Scheme

- Inner blinder can be set close to line impedance
- If impedance trajectory reaches inner blinder, it is most likely an unstable swing
- User settings are relatively easy to calculate because emphasis on timers is reduced

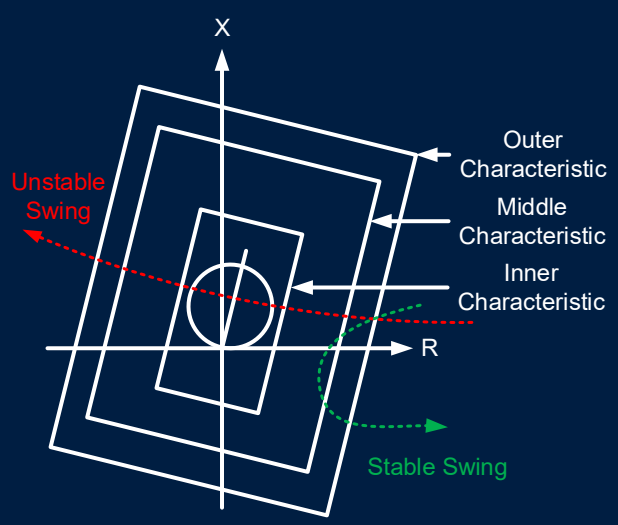

## Zone Shape Modification

Achieve compliance by modifying the zone shape to quadrilateral or lenticular mho

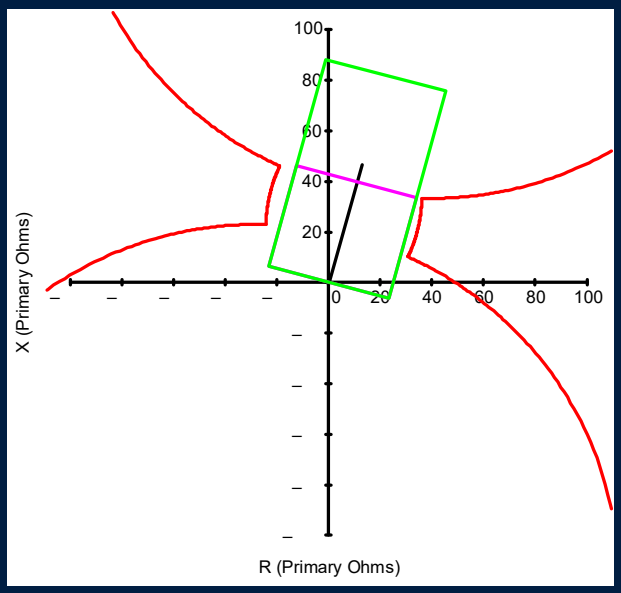


## Other Considerations

- If none of the proposed solutions are feasible, users can implement solutions that are immune to power swings by design
  - Current differential
  - Time domain
- If backup protection that would typically be impedance-based is implemented, it reintroduces need to comply with PRC-026

## Conclusions

- Mitigation solutions should not compromise BES reliability; PRC standards aim to improve BES reliability, not just meet mandated requirements
- Applying a dual-blinder scheme as PRC-026 mitigation solution is not always feasible
- OST scheme associated with continuous measurement methods and LE application is simple to set and can be easily applied as a mitigation solution

## Conclusions

- Triple-blinder OST scheme is relatively simpler to set than dual-blinder OST scheme
- Modifying zones to quadrilateral or lenticular mho shape also achieves compliance
- Proposed solutions are simple to set, allowing development of automated tools that can provide mitigation settings with less time and effort
- Paper provides detailed guidance on setting various schemes

**Questions?**