Selecting, Implementing and Overcoming Challenges when Selecting Coordination Criteria for Wide Area Applications

Naveen Ganta,
SynchroGrid, College Station,
Texas, 77840

Lalit Ghatpande,
SynchroGrid, College Station,
Texas, 77840

Joe Perez,
SynchroGrid, College Station,
Texas, 77840

***Abstract*— There is an increasing demand for utilities to define a relay settings process and check relay coordination which is driven by regulatory requirements such as the North American Electric Reliability Corporation (NERC) PRC-027-1 standard. Developing apt criteria to address all the pertaining elements requiring coordination is a crucial phase in performing any Wide Area Coordination (WAC) study.**

This paper discusses the methods to come up with coordination criteria by taking different scenarios and system configurations into consideration. This paper also reviews various challenges that may arise when implementing the adopted coordination criteria. Recommendations to overcome those challenges are also presented in this paper. Recommendations presented in this paper would be of help to utilities and consultants in avoiding issues when enforcing the determined coordination criteria.

Keywords — WAC; Coordination Criteria; Automation Tools; NERC PRC-027 R2; CTI; Ground Time Overcurrent.

I. Introduction

A WAC study is performed to evaluate the response of relays due to the changes in the power system over a period of time and to validate their intended sequence of operation.

NERC PRC-027 Requirement R2 gives three options to Generator Owners, Transmission Owners and Distribution owners connecting to a Bulk Electric System (BES) for performing a protection system coordination study [1]. To comply with the NERC PRC-027 Requirement R2, it is required to document which of the three options is utilized and identify the type of faults (3 phase, Single Line to Ground etc.) used for verification. It is also suggested to report criteria for where the fault current baseline is exactly established in the system [2].

Section II shows the process workflow for conducting a WAC study. Section III talks about the three different options provided in NERC PRC-027 Requirement R2 and the planning involved for performing a WAC study.

Section IV & V expound upon the importance of data collection, the short circuit (SC) model, and the SC model validation in WAC studies.

Section VI illustrates the development and selection of the coordination criteria for performing a WAC study [3].

Section VII & VIII expand on how to implement the adopted coordination criteria and document the results of the WAC study to comply with NERC PRC-027 Requirement R2 [3], [4].

Section IX shows a few common challenges that are encountered while performing WAC study and provides solutions to mitigate those challenges [3], [5]. Section X offers some additional considerations for efficiently conducting a WAC study.

The objective of this paper is to enhance the procedure for implementing a WAC study through customized coordination criteria to comply with NERC PRC-027 Requirement R2.

II. WAC Study Process Workflow

Figure 1 Below shows the generic process work flow for executing a WAC study. Details about each step in this process workflow are discussed in the following sections of this paper.

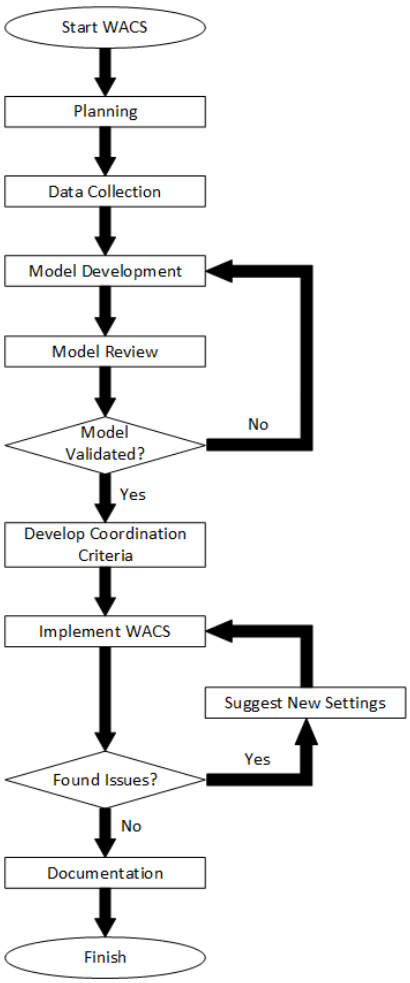

Figure 1. WAC Study Process Work Flow

III. Planning

NERC PRC-027 requirement R2 [1] proposes three options for each Transmission Owner, Generator Owner, and Distribution Provider connecting to the BES to perform a WAC study. Those options are

1. To perform WAC study every six years.
2. Establishing a three-phase and phase-to-ground fault current baseline and perform a WAC study when either the three-phase or phase-to-ground fault current values deviate more than 15%.
3. Use a combination of options one and two.

Depending on each utility's set guidelines, a utility can also go with a conservative approach by performing a WAC study for a fault deviation of 10%.

If a utility has a big system, WAC study can also be performed in stages. This can be achieved by performing a WAC study by dividing the whole system into subsystems depending on area, load capacity, voltage levels etc. This approach helps in avoiding the complexity of performing a WAC study for the entire system.

After evaluating these options, a viable option can be adopted that suits utility's set guidelines and WAC study can be initiated.

Performing WAC study of large power systems with multiple voltage levels and interconnecting utilities is a huge undertaking and requires meticulous planning and organizing techniques. Therefore, assigning roles, responsibilities, and resource allocation helps in executing WAC study efficiently.

IV. Data Collection and Short Circuit Model Development

Maintaining an accurate SC model is a critical part of performing a WAC study. An electrical grid is comprised of different electrical equipment with each piece of equipment having a distinct SC behavior. Therefore, data collection is of paramount importance in building an accurate model.

For model development, data can be collected using the field relays' protective settings, equipment test reports, nameplates, transmission line ratings, station one lines etc.

If the equipment data is not available from the interconnecting utility, then maximum and minimum SC contributions with X/R ratios can be obtained from them.

Modelling of Inverter Based Resources (IBR) is challenging as the SC behavior of IBR facilities is very different from that of a synchronous generator. Synchronous generators contribute high magnitude SC currents during the faults. IBR SC contribution is of low magnitude because of low thermal withstand capability of power electronics devices [6]. Therefore, assuming high current contribution from those IBRs can result in inaccurate responses from the relays.

The following example shows a step-by-step procedure we utilized for updating the SC model shown in Figure 2. In this example we used ASPEN One-Liner software for SC modelling.

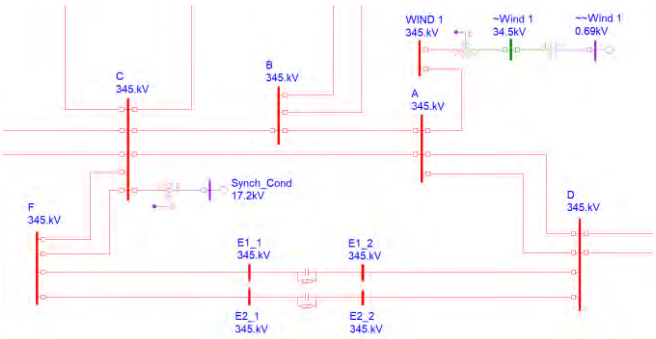

Figure 2. ASPEN One-Liner SC Model Example

In this example, we are going to consider a model which includes transformers, IBR interconnection, synchronous condensers, series capacitor banks and mutually-coupled transmission lines.

1. Refer station one-lines to confirm protective relays, PT and CT ratios, and equipment that needs to be considered for a WAC study.
2. Request latest applicable as-left field relay settings, equipment test reports and/or nameplates, transmission line facility ratings, transmission line length, mutual coupling parameters, equivalent SC contribution from IBR resources.
3. Import as-left relay settings into the ASPEN SC model.
4. Each piece of equipment has distinct impedance characteristics that define its short circuit behavior and needs to be accurately represented in the model.

   a. Transformer:- Transformer impedances can be gathered from the test report and nameplate picture. Most of the manufacturers provide load loss results, positive sequence impedance and zero sequence impedance in the test reports. Load loss and positive impedance can be used to determine positive sequence resistance and positive sequence reactance values.

   b. Transmission Lines:- Request transmission line facility ratings, line impedance parameters, and mutual coupling parameters from the utility transmission planning group.

   c. Synchronous Condensers:- Synchronous condensers are used to provide reactive power, inertia, and SC support to the utility. Synchronous, transient and sub transient reactance values can be obtained from manufacturer test report.

   d. Series Capacitor Banks:- Series capacitor banks are used to maintain the system voltage on long transmission lines. Series capacitor banks affect the reaches of the distance elements in the protective relays. Impedance information for the series capacitors can be obtained from the station One-line and the manufacturer design documents.

   e. IBR Interconnection:- Request the interconnecting IBR owners to provide three-phase and phase-to-ground SC contribution for a fault at the point of interconnection and use those fault values to model the IBRs.

If any of the data is not available, we recommend contacting the equipment manufacturer to provide the relevant data or typical values that may be used based upon other equipment data which are similar in size, rating, and design.

V. Model Validation

Once the SC model has been updated and reviewed to represent all the BES elements under the study, it is essential to validate the model because a lot of factors affect the short circuit current contributions in the real world. It is ambitious to achieve matching fault currents simulated in the model. Proper modeling of mutual coupling of the lines, accurate short circuit and Thevenin equivalent representations at the interconnecting utility terminals, and the system conditions at the time of the fault are some of the factors that could help achieve fault currents similar to real-world values. System conditions to consider include but are not limited to line or transformer outages, reduced generation from the nearby plants and availability of shunt or series reactive power compensation devices within the vicinity of the fault. Apart from all these factors, there will always be modeling constraints that hinder accurate representation of the physical power system with any given software platform.

The best possible way to validate the SC model is to compare the currents from the short circuit simulations in the model with that of the currents from the recent fault records from the field.

Taking all these into consideration, the SC model can be deemed acceptable for a WAC study if the simulated fault currents from the model are within 5% of error margin from the actual fault currents from the field.

One such example is shown in the figures below. Figure 3 shows the fault record we got from the field for a C phase-to-ground fault on a 345kV line. Figure 4 shows the fault simulated in the SC model matches the system conditions during the fault. While the fault current observed in the C phase from the field was 3976 A, the fault current observed in the SC model was 4073 A. A difference of ~2.44% was observed between the fault record and the SC model.

$$\%\,Difference = \frac{\left|\left(I_{f,field} - I_{f,SC_Model}\right)\right|}{I_{f,field}} * 100$$

$$\%\,Difference = \frac{|(3976 - 4073)|}{3976} * 100$$

$$\%\,Difference \approx 2.44\,\%$$

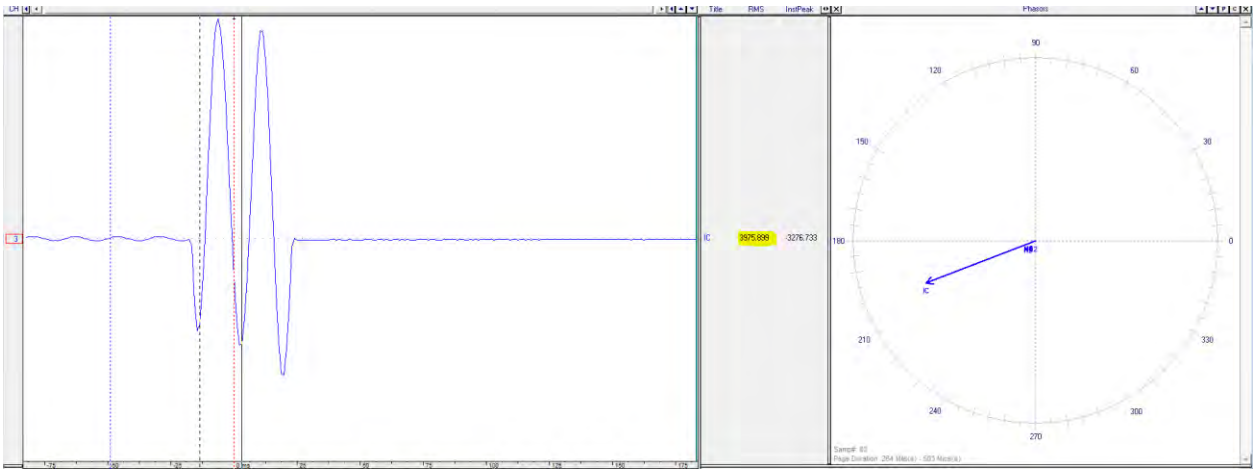

Figure 3. Fault Record gathered from the field

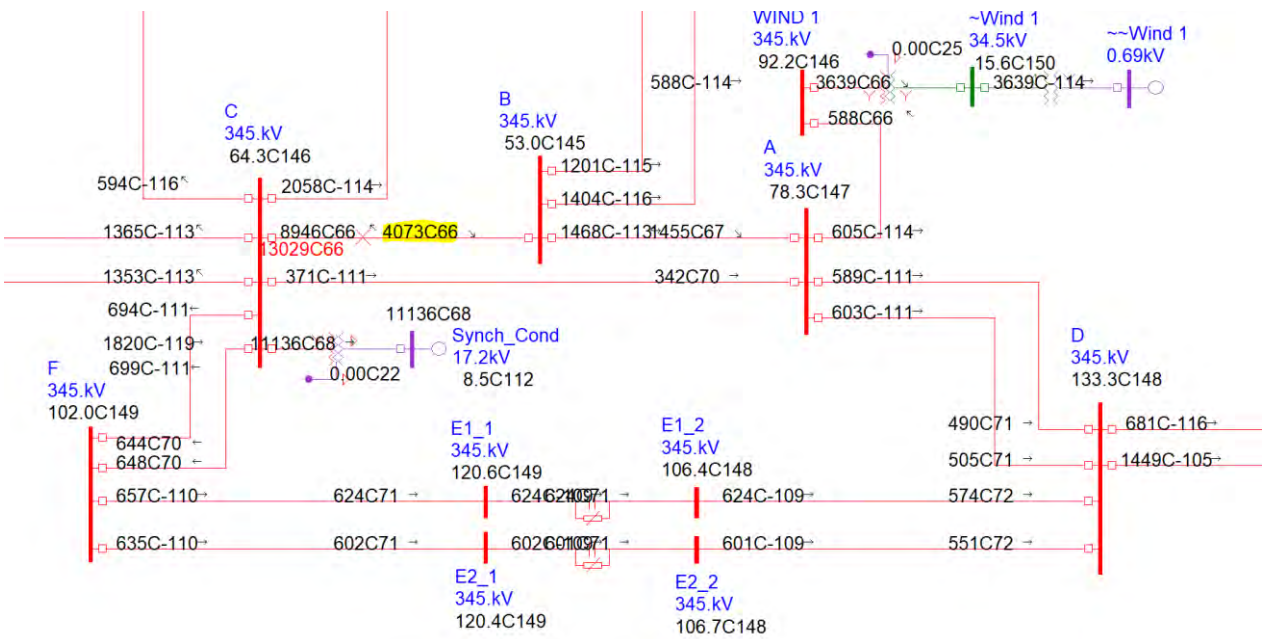

Figure 4. Simulated Fault in the SC model.

VI. Coordination Criteria Development

NERC PRC-027-1 mandates electric utilities have a process to develop new and revised protection system settings for BES elements in order to operate in an intended sequence during faults under requirement R1 but provide no details regarding the sequence of operation or technical criteria to be included.

There are two important things that are to be considered here. Firstly, it is essential (and the intention of NERC) to establish a process document, in other words a protection philosophy, that include guidelines for developing a new or revised setting. Secondly, ensuring that the new or revised settings operate in the intended sequence is also essential.

Before commencing a coordination study, it is necessary to develop coordination criteria that address the following conditions to organize the resources (engineers, automation tools etc.) and perform the study in a structured manner [3]:

- System scenarios and configurations to be analyzed in the coordination study.
- Protective elements to be included in the coordination study along with their order of priority.
- Acceptable ranges to evaluate protective elements included in the coordination study.

The coordination criteria document should also include details about the system being studied along with boundary conditions and, more importantly, the process followed to perform the coordination study, which is briefly discussed later in this paper.

As the purpose of the NERC PRC-027-1 standard is "To maintain the coordination of Protection Systems installed to detect and isolate Faults on Bulk Electric System (BES) Elements, such that those Protection Systems operate in the intended sequence during Faults" [1], the coordination study should aim to achieve intended sequence of operation in all possible scenarios and configurations that the power system can experience during its operation.

In other words, the coordination criteria should outline all the possible circumstances, including those which result in minimum and maximum fault current contributions, that need to be evaluated in the study as they change the response of the protection system. This may include different scenarios encompassing N-1 and N-2 contingencies (lines, power transformers, generation units etc.) apart from normal operating conditions. The study should also take into consideration different power system configurations that may affect the flow of current. This may consist of analyzing simulations with different tie-breaker conditions, with and without series and shunt reactive power compensation devices that would affect the amount of fault current contribution. The type of faults (3Ph, L-L & L-G) to be evaluated and the location of faults including the tap lines, distribution transformers etc., should also be listed to consider all possible scenarios and test the sensitivity of the relays. It is advised to evaluate the coordination of relays by placing sliding faults along the primary and forward second lines. For a thorough investigation of the system, both bolted and impedance faults can also be included in the study.

Furthermore, the NERC PRC-027-1 standard identifies the following current sensitive elements to be included in the coordination studies as per Requirement R2:

- "21 – Distance if:
    - Infeed is used in determining reach (phase and ground distance), or
    - zero-sequence mutual coupling is used in determining reach (ground distance).
- 50 – Instantaneous overcurrent.
- 51 – AC inverse time overcurrent.
- 67 – AC directional overcurrent if used in a non-communication-aided protection scheme" [1].

Protective elements that operate instantaneously do not require to be coordinated and can be omitted from the coordination studies. These include pilot protection schemes like differential and communication based overreaching distance elements that are very selective. Instantaneous overcurrent elements are also omitted from coordination studies. However, it is necessary to verify that the pickup settings for such overcurrent elements are checked against standards like NERC PRC-023-4 and NERC PRC-025-2 so that they do not operate for allowable loading conditions.

Backup protective elements that operate based on current or apparent impedance with some definite or inverse time delay must be coordinated. It is also important to prioritize these elements and document the same in the coordination criteria document so that the time delays and time dials can be appropriately adjusted in the situation of a conflict during the coordination study. Distance elements (21) are given priority over delayed or inverse time overcurrent elements [3].

We will now discuss the standard protection philosophy for the protective elements under the coordination study and their preferred boundary criteria that can be adopted to evaluate coordination during the study.

Typical protection philosophy documents would include the guidelines to achieve an absolute setting for a protective element (e.g., the Zone 1 absolute setting as per the philosophy can be 80% of the primary line impedance). It is advised that the coordination criteria should also include acceptable ranges for the protection elements to attain coordination in the system with minimal changes. This way, only those settings that fall outside the acceptable range can be identified and revised to achieve coordination.

We will now discuss adopting coordination criteria for the elements mentioned in the PRC-027-1 document based on the topology of the power system.

<u>Distance Elements (21)</u>

Zone 1 (Underreaching Distance Element): To properly protect the line using the distance Zone 1 element, it is recommended to first identify whether the line being protected is long, medium, or short. The lines are determined to be long, medium, or short based on the SIR (Source-to-line Impedance Ratio). For example, Zone 1 elements can be set to have a reach of 80% of the line for the long and medium length lines and 60% for the short lines. The acceptable range for the evaluation of Zone 1 elements can also be adopted based on the topology of the line.

When evaluating the zone 1 reach in a coordination study, it is proposed to allow up to 5% above the preferred reach and 10% below the preferred reach for the setting to be acceptable for long and medium lines. Since Zone 1 elements may overreach on short lines, it is highly recommended to allow no more than 2%-3% of margin above the preferred reach.

Zone 2 (Overreaching Distance Element): It is general practice to set the Zone 2 element to have a reach of 120% of the primary line so that it is expected to protect for faults anywhere on the primary line. However, this may result in coordination issues, especially in scenarios where a short second line is followed by a long primary line being protected.

When evaluating the Zone 2 reach in a coordination study, the recommended acceptable range is definitely beyond the remote bus and within 50%-60% of the shortest line at the remote terminal.

The acceptable range for three terminal lines with infeed conditions should be similar as mentioned above to help identify elements that need to be revised to improve coordination.

Overcurrent Elements

It is necessary to verify that the pickup settings for overcurrent elements are checked against standards like NERC PRC-023-4 and NERC PRC-025-2 so that they do not operate for allowable loading conditions.

Time delays for overreaching distance and overcurrent elements within relays at the same terminal should be properly determined based on the priority of the elements so that they are well-coordinated.

It is very crucial to adopt an adequate and safe coordinating time interval between the primary and backup protective devices. The coordinating time interval between relays at primary and backup terminals should be chosen such that there is enough time for the breaker failure element to operate at the primary terminal before the relays at the backup terminal operate.

VII. Coordination Study Implementation

As discussed in the previous section, a structured step-by-step process should be defined in the coordination criteria document that helps perform the coordination study. The evaluation of protective elements in the study is highly recommended to be carried out in the same order of priority as the protective elements identified in the criteria document.

A typical coordination study starts with evaluating the reaches of distance elements followed by the CTI checks for the distance elements alone. The coordination issues with distance elements are then fixed to provide a solid reference for the next priority elements, which are usually the time overcurrent elements. The CTI checks are again performed now including the time overcurrent elements to identify and fix the time dials.

Although this process results in the fault simulations increasing two- to four-fold, this causes the selectivity and sensitivity between the protective elements to increase significantly.

Since the phase and ground elements are independent of each other, the coordination study for these elements can be performed in parallel. It is beneficial to categorize the issues in order of their severity to resolve them accordingly. High-risk issues are those that can lead to misoperations due to improper settings for instantaneous elements. Medium-risk issues are those that include improper setting or miscoordination (not meeting desired CTI) of distance elements. Low-risk issues are those that include miscoordination of backup protective elements (time overcurrent elements) [4].

VIII. Documentation

Depending on the system under consideration for a WAC study, the results of the study to be analyzed can be overwhelming. Therefore, it is important to organize the study report which includes executive summary, assumptions, collected data, details about system modelling, methodology followed, adopted coordination criteria, study results, violations and recommended setting changes, and protection philosophy followed for revising settings. Any deviations from the decided protection philosophy and the defined coordination criteria should also be documented in the report.

If a system under the scope of WAC study consists of multiple interconnecting utilities, it is recommended to have a separate report pertaining to each utility to properly communicate the results and the effects of the revised settings on their system.

A detailed report can help save time while performing future WAC study as a methodology and coordination criteria would have already been established. If the system experiences any misoperations after performing a WAC study, the detailed report can be a helpful resource for analyzing those misoperations.

A detailed coordination study report and communication with other utilities can be used as an evidence to comply with NERC PRC-027.

IX. Challenges And Mitigative Measures

Every coordination study, depending on the topology of the system, the protection philosophy followed, and the coordination criteria adopted will have its own issues in achieving a coordinated system. This section provides a few such challenges and provides helpful tips for resolving them.

a. Model Validation

With a continuously changing power system, it is crucial to keep the SC model updated so that it accurately represents the power system being coordinated. Along with the verification of impedances for transmission lines, transformers, and generator units, it is of paramount importance to check and model the mutual coupling of transmission lines and accurately represent the power system at the interconnecting terminals using equivalent representation of neighboring utilities.

In order to avoid issues of mismatching fault current contributions, it is recommended that SC models are periodically verified and updated either semi-annually or annually. Maintaining up-to-date repositories or databases of the assets will make the data gathering, SC modeling and model validation easier.

b. Mismatching models

If two utilities are using different software platforms for conducting a WAC study, fault levels and relay trip timings between those two models on the interconnecting equipment may differ depending on the difference in fault calculation algorithms.

In order to avoid that issue in this scenario, fault values between those two models should be compared before initiating a WAC study.

c. Coordination of Distance elements:

It is a common practice to set the Zone 2 of distance elements to 120% of the primary line impedance so that it overreaches the primary line of protection. When using this philosophy, it is vital to examine the resulting setting against a few check points so that it coordinates with other protective elements.

When a long transmission line is followed by a comparatively short line, it is important to verify that the Zone 2 reach of distance elements does not reach beyond 50% on the shortest second line. This helps avoid coordination issues with Zone 2 elements of the relays on the short line.

The overreaching zones of distance elements should also be verified to see if they respond to faults on the secondary side of tapped distribution transformers or auto-transformers at the end of the line. If the distance element detects faults on the secondary side, it is necessary to check that there is sufficient CTI with the overcurrent element on the secondary side of the transformer.

d. Coordination of Time Overcurrent elements:

The ground time overcurrent element is usually considered a backup to pilot schemes and step distance protection and a last resort of protection for the transmission lines. It is important to coordinate this element with surrounding ground time overcurrent elements for sequential tripping during adverse system conditions where time overcurrent is the only available option to detect and isolate the fault.

Once the coordination issues for distance elements are addressed, the time overcurrent elements should be reviewed for proper CTI with the time delays of distance elements acting as a reference. It becomes challenging to coordinate time overcurrent elements at this phase of the coordination study, especially in a closed loop without many infeed options and in radial system topologies. These topologies have their own complications, which are discussed to help achieve coordination.

1. Coordination of time overcurrent elements in closed loops

The complexity involved with the coordination of time overcurrent elements in closed loops is that the process of coming up with the time dials to achieve the desired CTI is iterative and arduous.

The following example briefly explains the coordination issue with time overcurrent elements in closed loops. Figure 5 shows a 3-bus system with 6 terminals. We can start adjusting the time dial of R5, which is a backup to R1, to achieve desired CTI with R1 as reference. We then move to adjust R3 to achieve desired CTI with R5 as a reference. We then move on to adjust the time dial of R1 to achieve desired CTI with R3 as reference, completing the loop. In this scenario, the difficulty arises during the process of adjusting the time dial for R1 to achieve desired CTI with R3 as reference because we started the task of achieving desired CTI in the closed loop with R1 as reference. This task leads to performing considerable iterations before proper coordination of all terminals can be accomplished. Moreover, it may become even more burdensome to achieve desired CTI as the time overcurrent time dials have already been adjusted to attain CTI with distance elements by this phase of the coordination study. In addition, with an ever developing power system, the complexity of performing this task escalates enormously [5].

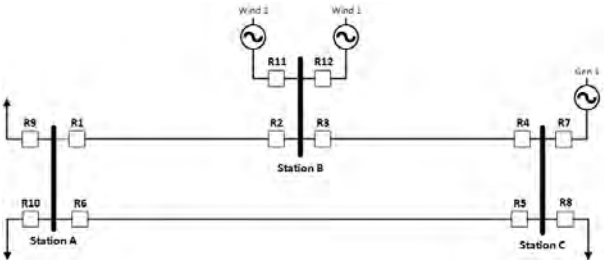

Figure 5. Closed Loop system

In order to avoid such complications and tedious manual analyses, protection engineers are advised to use automation tools that help in achieving coordination. One such option is to address this as an optimization problem to auto tune the time overcurrent elements to achieve coordination as mentioned in [5]. In scenarios where a desired CTI is not possible, the constraints are recommended to be adjusted to achieve minimum CTI [4].

Minimum CTI for a backup relay can be decided by taking into consideration the breaker failure times of the primary relay, the breaker operating time, and the latency period for data transmission across the relays.

2. Coordination of time overcurrent elements in radial lines

The time overcurrent elements in radial lines would observe similar fault currents all along the radial line. If standard pickup and time dial settings are configured for all the relays, the operating times of all time overcurrent elements would be similar. While a desired CTI can be easily achieved in this scenario, the time of operation may exceed the trip time of one second for line end faults.

While the relays can be configured to achieve the desired CTI and security in such scenarios, the desired operating times cannot be achieved. Given that the time overcurrent elements are the last resort protective devices, priority should be given to security over speed. However, it is recommended to prioritize the strongest bus in order to attain minimum time delay and then configure the relays around it to achieve minimum CTI, thus trading off the operating times [7].

X. Additional Considerations when performing A WAC Study

1. We highly recommend utilizing automation tools to conduct WAC studies. Automation tools can be deployed in model validation, reach verification for distance elements, and CTI verification between primary and backup relays. Automation tools are faster, more reliable, and accurate when compared to manual procedures. Utilizing automation tools also helps in reducing human errors as well as overall time spent performing the study.

2. It is advantageous to observe and understand the system topology and grid behavior in different operating scenarios during the data gathering and model validation phases of WAC studies. This helps the protection engineer to generate coordination criteria that best fits the study and analyze the results effectively.
3. Distance (21), Instantaneous overcurrent (50), AC Inverse time overcurrent (51) and AC directional time overcurrent (67) elements are mentioned in the NERC PRC-027 standard. It is recommended that Generator Owners also evaluate additional protective elements such as negative sequence overcurrent (46), Stator Ground Fault (64G) and unbalanced overcurrent elements (60) so that they do not operate for faults on the transmission system.

XI. Conclusion

WAC studies are a laborious task, especially for a utility with a big system connecting to multiple interconnecting utilities. Determining coordination criteria tailored to the applicable system will ensure that a WAC study is executed efficiently without encountering a large number of issues.

By choosing apt coordination criteria and implementing it through automation tools will help utilities to save time and resources as well as comply with NERC PRC-027 Requirement R2.

XII. References

[1] NERC,"PRC-027-1 – Coordination of Protection Systems for Performance During Faults", November, 2015.

[2] Suma Pullela, TRE, "PRC-027-1 – Coordination of Protection Systems for Performance During Faults – Presenation", May, 2020

[3] Bipasha Barman, Jason Clark, Vernon Padaca, "A Practical Guide to Performing Wide-Area Coordination Analysis", 2014.

[4] Caitlin Short, Chris Byrne, Denis Bucco, Curtis Sanden, Art Torres, and Ed Wong, "Lessons Learned Implementing a Wide-Are Coordination Program in Preperation for NERC PRC-027".

[5] Nathan Thomas, Luke Hankins, and Joe Perez, "Simplifying Wide Area Coordination of Directional Time Overcurrent Relays Using Automatic Settings Selection", 2019.

[6] IEEE system Protection Working Group C32, "Impact of Inverter Based Resources on Utility Transmission System Protection – Draft 5.0", 2019.

[7] Rick Taylor, "Transmission Line Applications of Directional Ground Overcurrent Relays", 2011.

XIII. Author Biographies

Naveen Ganta received his MS in Electrical Engineering from the University of Texas at Austin in 2017 and B.Tech degree from the Indian Institute of Technology, Bhubaneswar in 2015. Since 2018, he has worked as a Relay Settings Engineer with SynchroGrid, working on various engineering analysis projects.

Lalit Ghatpande received his BE in Electrical Engineering from the University of Pune in 2013 and an MSEE degree from Michigan Technological University in 2017. Since 2017, he has worked at SynchroGrid as a Relay Setting Engineer. Lalit is a registered Professional Engineer in the state of Texas.

Joe Perez received his B.S. degree in Electrical Engineering from Texas A&M University in 2003. Joe is the author of many relay application notes and has presented technical papers at WPRC, Texas A&M, and Georgia Tech Relay Conferences. Joe is the owner of SynchroGrid, a registered professional engineer in the state of Texas, and a member of PSRC, IEEE, and PES. Joe resides in the Bryan/College Station area. He can be contacted at jperez@synchrogrid.com.