Application Considerations for Protecting Three-Terminal Transmission Lines

Robert Jimerson
Oncor Electric Delivery

Alex Hulen, Ritwik Chowdhury, Neeraj Karnik, and Bernard Matta
Schweitzer Engineering Laboratories, Inc.

© 2021 Customer Company and SEL

1

Overview

- Three-terminal line overview
- Distance elements
- Pilot schemes in three-terminal lines
- Pilot scheme security
- Pilot scheme dependability
- Breaker failure
- Directional element polarization

2

Infeed in three-terminal lines

Infeed

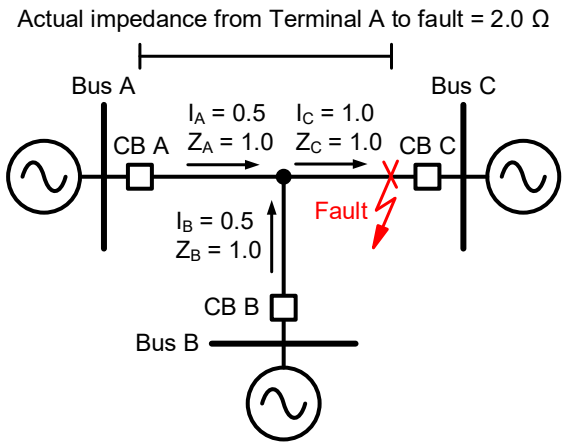

At Terminal A

- Impedance to fault = 2.0 Ω
- Apparent impedance = 3.0 Ω
- Measured apparent impedance is greater than line impedance
- Infeed results in distance relay underreach

3

Outfeed in three-terminal lines

Outfeed

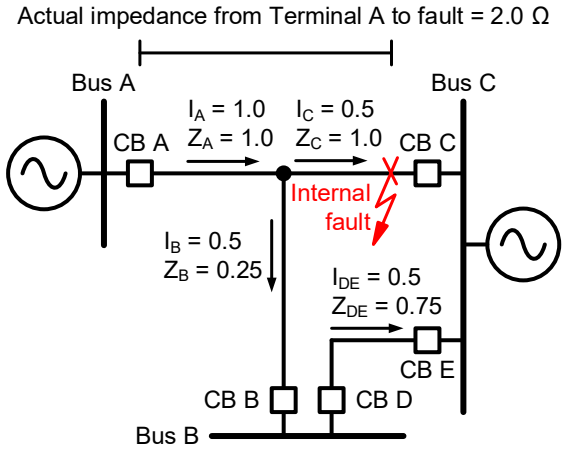

At Terminal A

- Impedance to fault = 2.0 Ω
- Apparent impedance = 1.5 Ω
- Parallel path to fault results in measured apparent impedance being less than line impedance
- Outfeed results in distance relay overreach

4

Oncor Line ABC

Details

- Three-terminal line between Bus A, Bus B, and Bus C
- DCB pilot scheme over power line carrier (PLC)
- Two-terminal transmission line connection between Bus B and Bus C

Line ABC

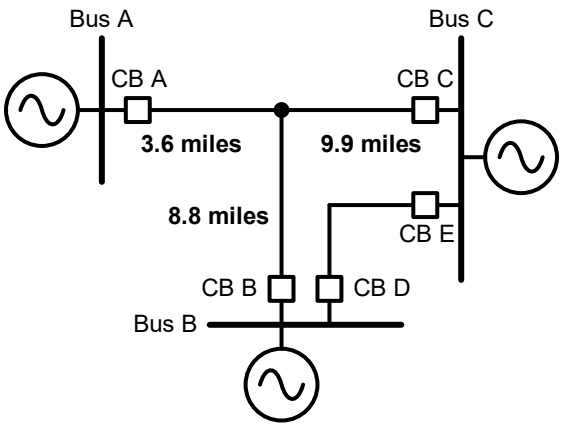

5

Underreaching distance zones

- Must not overreach either remote terminal
- Set reach disregards the effect of infeed
- With outfeed, accounts for the worst-case apparent impedance for external faults
- Apparent impedances determined with less confidence than known line impedances; applied margins should account for this
- May result in “blind spot” where no terminal Zone 1 trips

6

Zone 1 “blind spot” example

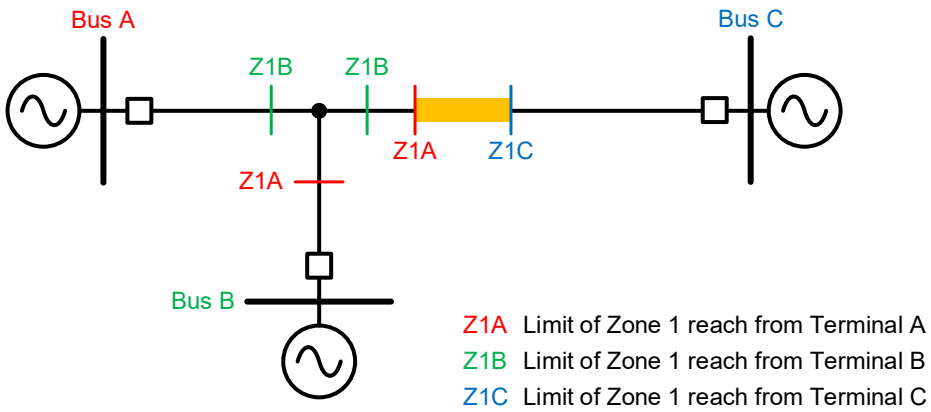

7

Setting Zone 1 at Terminal A

Simulated faults

- **F1** three-phase fault at Bus C with Terminal B open (no outfeed)
- **F2** three-phase fault at Bus C with Terminal B closed (outfeed condition)
- **F3** three-phase fault at Bus C with Terminal B closed and additional line outage

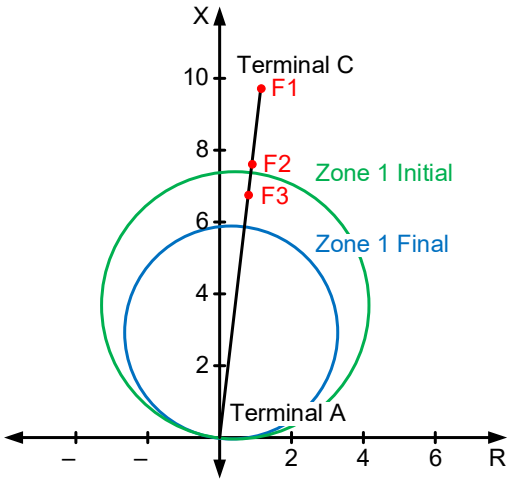

8

Overreaching distance zones

- Must be dependable for faults at both remote terminals
- Simulates faults at each remote terminal, with the remote terminals open and closed
- Setting reach above largest simulated apparent impedance to account for infeed
- Resulting large reach may affect loadability; consider load encroachment

9

Setting Zone 2 at Terminal C

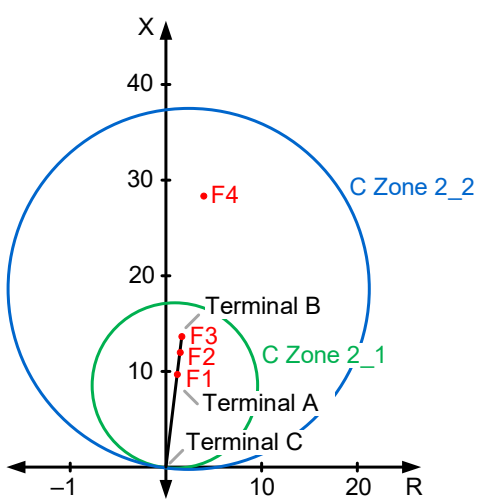

Simulated faults

- **F1** fault at Terminal A with Terminal B open
- **F2** fault at Terminal A with Terminal B closed (infeed)
- **F3** fault at Terminal B with Terminal A open
- **F4** fault at Terminal B with Terminal A closed (infeed)

10

DCB pilot scheme

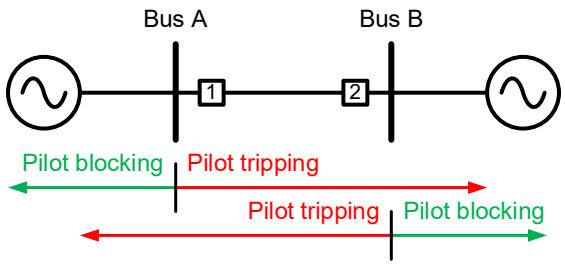

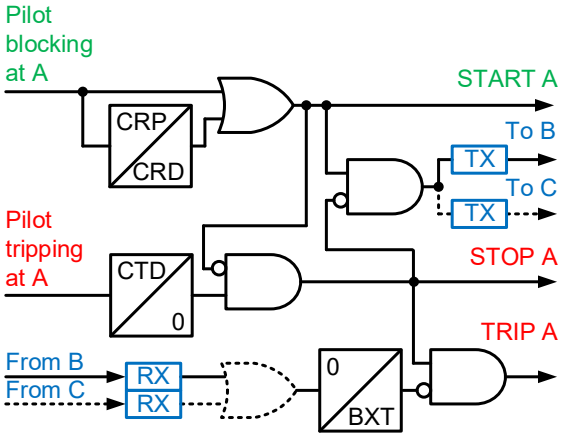

11

POTT pilot scheme

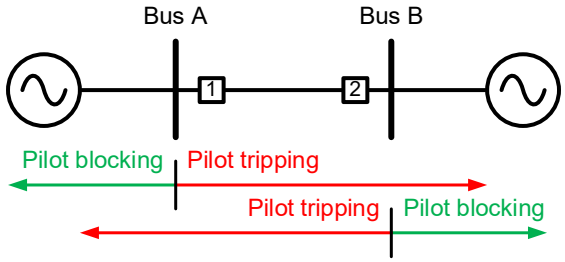

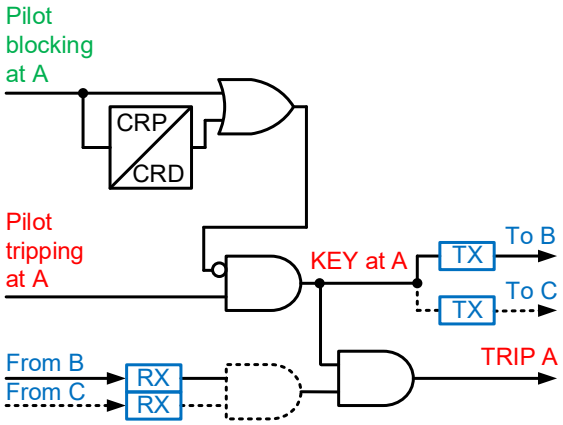

12

Ground overcurrent pilot security

Zero-sequence network

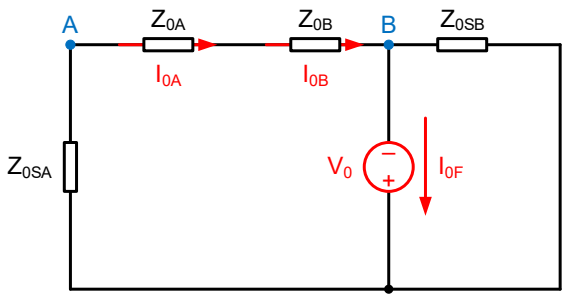

Two-terminal line

- Both relays measure the same zero-sequence current for external fault
- Terminal B blocking element is set below Terminal A tripping element
- $32F50_A > k_1 \cdot 3\ R\ 5_B$
- k_1 is typically between 1.25 and 2.0

13

Ground overcurrent pilot security

Zero-sequence network

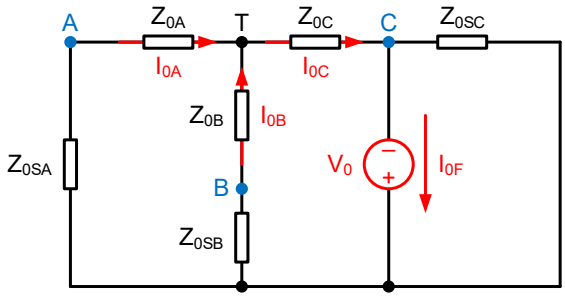

Three-terminal line (infeed)

- Current at Terminal C is greater than current at Terminal A
- Relay remains secure

14

Ground overcurrent pilot security

Zero-sequence network

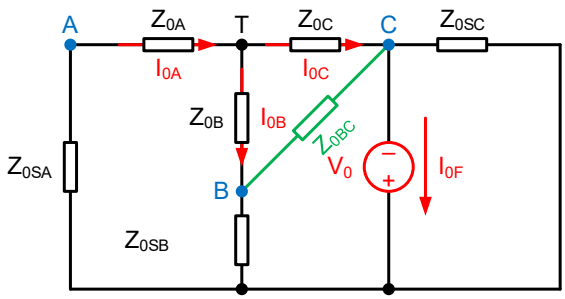

Three-terminal line (outfeed)

- Outfeed at Terminal B due to Z_{0BC} path
- Current at Terminal C less than current at Terminal A
- Two-terminal criterion insufficient
- Updated criterion: $32F50_A > k_1 \bullet (3\ R\ 5_{\ B} + 32R50_C)$
- k_1 typically between 1.25 to 2.0

15

Distance element pilot security

- Reverse pilot-blocking distance element should be set to block for remote overreaching pilot-tripping elements
- Two-terminal criterion
  - $ZR_L > k_2 \bullet ZF_R - Z_{LINE}$
  - k_2 typically 1.5 or greater

16

Distance element pilot security

- With outfeed, apparent impedance at Terminal A is less than line impedance
- Criteria are applied, assuming that parallel impedance between buses (Z_{BC} in figure) goes to zero
- Accounts for both remote pilot-tripping elements reaches

$$ZR_C > \left[\begin{array}{l} k_2 \cdot ZF_A - \left(Z_A + \dfrac{Z_B \cdot Z_C}{Z_B + Z_C} \right) \\ k_2 \cdot ZF_B - \left(Z_B + \dfrac{Z_A \cdot Z_C}{Z_A + Z_C} \right) \end{array} \right]$$

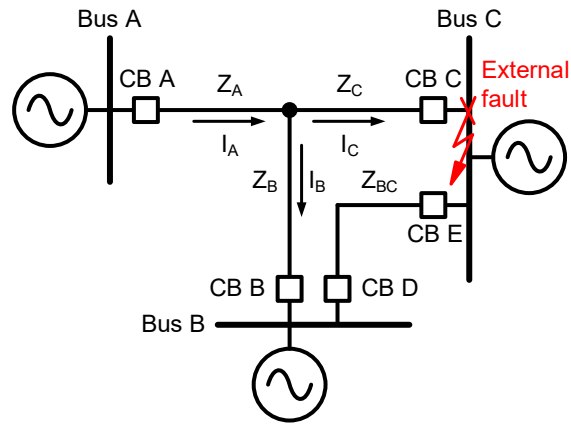

17

Setting pilot-blocking zone at Terminal C

Simulated faults

- **F1** fault behind Bus C with Terminal B open (no outfeed)
  - **F1A** as seen by Terminal A
  - **F1C** as seen by Terminal C
- **F2** fault behind Bus C with Terminal B closed (outfeed)
  - **F2A** as seen by Terminal A
  - **F2C** as seen by Terminal C

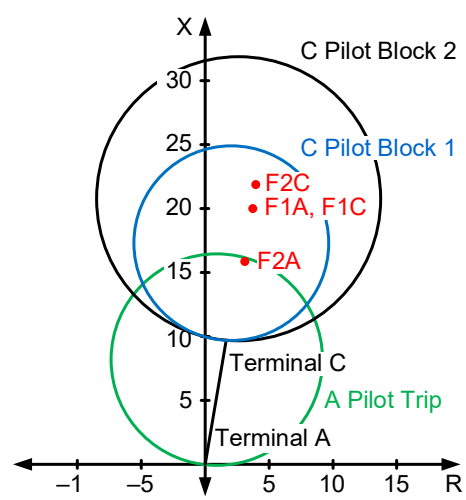

18

Pilot scheme dependability

- Terminal with outfeed issues undesired block signal (DCB) or refrains from issuing permissive signal (POTT)
- Pilot scheme operation is inhibited until Terminal C trips on its instantaneous elements and opens
- Scheme relies on sequential tripping to clear fault
- Current reversal logic, block extension timer (DCB), and echo timer(s) (POTT) delay fault clearing

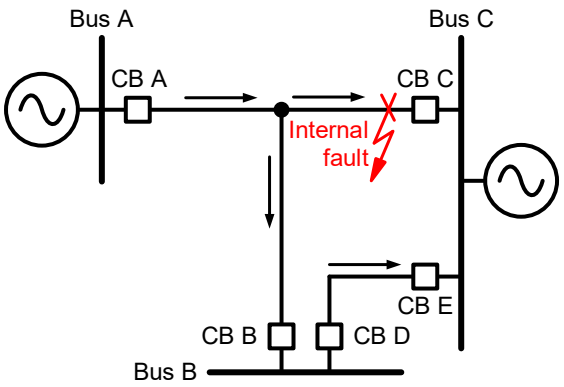

19

Alternative pilot schemes

Direct underreaching transfer trip (DUTT)

- Underreaching distance element (Zone 1) is key to transfer trip
- Received transfer trip is not supervised
- Requires reliable channel
- Trips both far terminals

Permissive underreaching transfer trip (PUTT)

- Underreaching distance element (Zone 1) is key to permissive signal
- Received permissive signal is supervised by overreaching elements
- Unlike POTT, trips with receipt of single permissive signal
- May not trip all far terminals

20

Three-terminal breaker failure with outfeed

- Since DCB and POTT scheme operation may rely on sequential tripping, breaker failure results in additional delay in some three-terminal outfeed scenarios
- Current reversal dropout delays and blocking extension timers (DCB) or echo timers (POTT) delay clearing of fault
- Total fault clearing is on the order of Zone 2 element delay
- Direct transfer trip (DTT) upon breaker failure for faster fault clearing can be considered

21

Directional element polarization

- Current in ≠ current out
- Negative-sequence and zero-sequence voltage polarization options may have outfeed in different fault locations and at different levels of severity
- It uses one polarizing quantity
- Comprehensive short-circuit simulations should be used to evaluate selection of polarization

22

Summary

- Overreaching distance zones should consider infeed and underreaching distance zones should consider outfeed
- Additional coordination margins are required between local and remote pilot-tripping and blocking elements due to outfeed
- Outfeed may reduce pilot scheme dependability; less common PUTT and DUTT schemes may be considered
- Current reversal logic, block extension timer (DCB), echo timer(s) (POTT), and breaker failure delay fault clearing
- One polarizing quantity for ground directional element should be used
- Comprehensive short-circuit studies are key

23

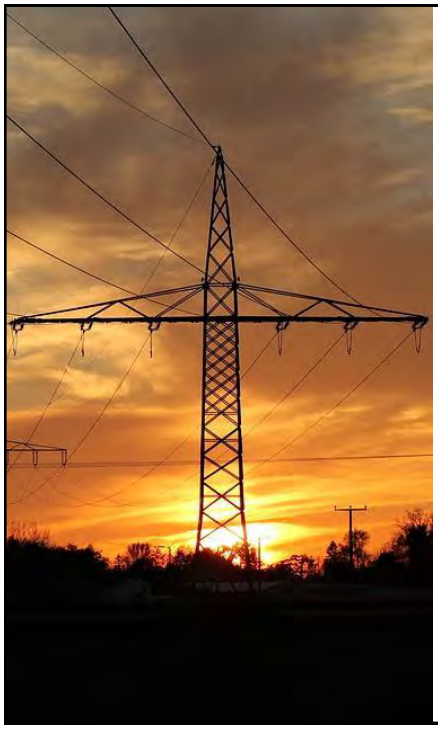

Questions?

24