Field Experience With Open-Phase Testing at Sites With Inverter-Based Resources

James Gahan, *Cypress Creek Renewables*
Ariel Valdez, *Dominion Energy*
Brett Cockerham, Ritwik Chowdhury, and John Town, *Schweitzer Engineering Laboratories, Inc.*

***Abstract*—Integrating inverter-based resources (IBRs) into distribution systems has yielded operational concerns and challenges. IEEE 1547.1-2020 is used when testing systems that include IBRs interconnected to the electric power system (EPS). One of the many type tests described in this standard focuses on open-phase testing guidelines.**

In this paper, we analyze notable field events recorded during open-phase tests at solar facilities. These events reveal system overvoltages and excessive harmonics at several sites. To address these concerns, we use field events to demonstrate the effectiveness of voltage-based detection schemes. These schemes consider the total harmonic distortion of the phase voltages and a zero-sequence overvoltage element.

I. Introduction

The need for clean and sustainable energy has resulted in inverter-based resources (IBRs), such as wind and solar, to be a desirable and dominant choice as a distributed energy resource (DER). IEEE 1547-2018 specifies requirements for DERs that interconnect to any electric power system (EPS) delivering power to a load, such as a distribution system [1]. One of the requirements specified by IEEE 1547-2018 is that a DER shall detect and trip all phases within two seconds for any open phase condition at the reference point of applicability, which by default, is the point of common coupling (PCC) [1].

For many utilities, pole-top reclosers may be applied at the PCC. The reclosers are often equipped with current transformers (CTs) and instrumentation used for voltage sensing. Traditional wire-wound voltage transformers (VTs) are common in these applications, as well as capacitive low-energy analog (LEA) sensors. It is also possible for resistive LEAs to be installed within the recloser bushings instead of capacitive LEAs. By using various references, a protection engineer may consider applying a sequence overcurrent element that operates on the ratio of negative-sequence current (I2) to positive-sequence current (I1) (i.e., I2/I1) or the ratio of zero-sequence current (I0) to I1 (i.e., I0/I1) to detect an open-phase condition [2] [3] [4] [5] [6]. While methods that use sequence components of the current have proven to be effective in many applications, they are challenged by the commissioning type test requirements in IEEE 1547.1-2020 [7].

Per IEEE 1547.1-2020, the open-phase condition must be tested on the utility-side of the transformer, while the IBR is operating at the greater of the following two levels [7]:

- Five percent of rated output current
- DER minimum output current

In addition to the commissioning type test requirements, an IBR may have low output power due to a lack of wind or low solar irradiance. When combined with the high CT ratios (CTRs) available to a recloser (typically 1000:1 or 500:1), a current-based open-phase detection (OPD) method is often rendered ineffective. Furthermore, the control system of an IBR may also respond unfavorably by reducing the injected currents to the EPS or producing low levels of negative-sequence currents on signals with different frequencies [8] [9]. Event records that exhibit such behavior are presented in Section III.

Due to the numerous challenges encountered by current-based schemes, voltage measurements in the protective relaying system may supplement detection of an open-phase condition using the following two methods:

- Zero-sequence (3V0) overvoltage scheme
- Voltage total harmonic distortion (V-THD) scheme

It is worth noting that an open-phase is not an islanding condition, because the DER is connected to the system through one or two phases. Hence, some of the techniques that are used for islanding detection may also be ineffective.

This paper uses field events to demonstrate the effectiveness of the two voltage-based open-phase detection schemes.

II. Description of Open-Phase Testing

IEEE 1547.1-2020 describes a type test that must be performed at the time of commissioning to verify that a DER ceases to energize the utility at the PCC following the occurrence of an open phase between the IBR and the electric utility [7]. The standard explains that equipment under testing must meet the timing requirements of IEEE 1547-2018 for unintentional islanding (two seconds) [1].

Fig. 1 displays a generic single-line representation of the systems in which the commissioning tests are performed.

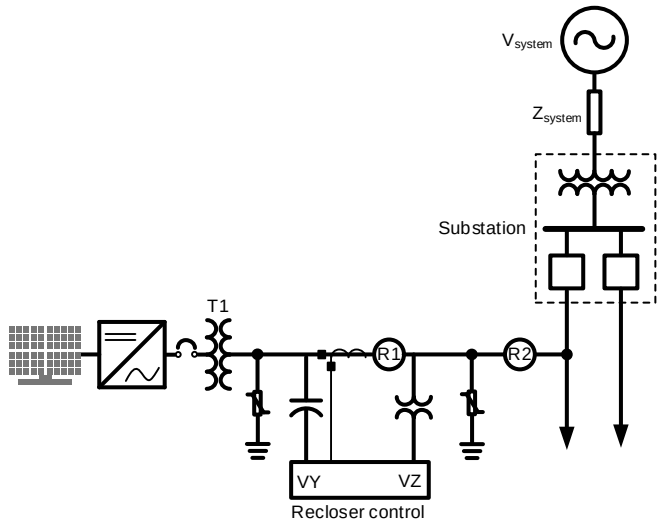

Fig. 1. DER Interconnection Topology Example

These applications include two pole-top reclosers (R1 and R2) in series at the PCC. R1 is owned and operated by the DER stakeholder and R2 by the electric utility. The recloser controller connected to each recloser is a microprocessor-based relay with a three-phase voltage measurement capability on both the utility and DER side of the recloser (six voltage inputs total). Reclosers can be ordered with single-phase interrupting capabilities, but all three phases are commonly operated together.

R1 is connected to the pad-mounted transformer (T1) through insulated cables. Additionally, the low-voltage transformer winding is connected to the inverter via insulated cables or close-coupled bus connections. The transformer winding configuration types reviewed in this paper consisted of three different variations (i.e., YNy0, YNd11, and Dyn1) for the five sites under testing. The alternating current (ac) contactor connects the IBR to the low-voltage transformer windings at this site and can be operated by the protective system internal to the IBR.

To demonstrate compliance with the open-phase type test requirements of IEEE 1547.1-2020, the utility initiated a single-phase trip at R2. The event records in this paper were measured at R1.

III. Analysis of Field Events

Open-phase events acquired from commissioning tests spanning across ten different locations in the United States were analyzed to build a protection scheme that provides secure and dependable open-phase detection. From these tests, dozens of event reports recording the measured currents and voltages before, during, and after the open-phase condition were reviewed. After analyzing the data recorded in each event report, similar observations were made; therefore, this paper discuses five key event reports from five different sites. These events can be used to fully explain the significance of the observations made during analysis. The transformer connection, IBR-rated output, rated voltage levels, number of inverters tied to the collector bus, and CTR are detailed in Table I for each of the five sites.

Table I
System Data for Open-Phase Commissioning at Five Sites

	Site 1	**Site 2**	**Site 3**	**Site 4**	**Site 5**
Vector Group	YNy0	YNy0	YNd11	Dyn1	YNy0
IBR-Rated AC Output (MW)	5	5	2	1.125	7.5
Nominal High Voltage (kV)	12.47	22.86	34.5	24.94	23.9
Nominal Low Voltage (V)	600	575	600	480	600
Total Inverter Count	2	3	1	45	3
Recloser CTR	1000:1	1000:1	500:1	100:1	1000:1

For each application, the presented event reports include the voltages and currents measured at R1 (from Fig. 1). Voltages labeled V*p*Y (where *p* = A, B, C) were measured on the DER side of R1, and voltages labeled V*p*Z (where *p* = A, B, C) were captured on the utility side of R1. Also, the V*p*Z terminals were sourced from traditional wire-wound VTs (also connected to metering equipment), and the V*p*Y terminals were sourced from LEA sensors with capacitive voltage dividers installed in the recloser bushings.

A. *Site 1*

Fig. 2 shows the first of the five events presented in this paper. The currents were relatively balanced during the first 0.11 seconds recorded. Immediately after 0.11 seconds, B-phase became open-circuited at R2. At this time, the measured B-phase current (IB) at R1 decreased to zero amperes, and an increased distortion was observed on the measured B-phase voltages, VBY and VBZ. The recloser at position R1 interrupted all three-phases at 0.28 seconds into the event. The three-phase trip was initiated by the recloser control, due to the assertion of the zero-sequence overvoltage logic reviewed in Section V. Once all three phases of the IBR were isolated from the system at the PCC, the currents measured by R1 go to zero. The inverter output continued to operate with increased voltage and waveform distortion on all three-phases (as recorded by VAY, VBY, and VCY). This increase in voltage on each of the three phases when isolated from the utility is described further in [10] [11]. When VpY voltages decreased to zero volts at approximately 0.41 seconds, the IBR was completely isolated from the transformer via a low-side ac contactor.

It is interesting to note that once the open-phase condition on B-phase occurred, the magnitude of the fundamental frequency component of the phase voltages did not deviate much from the previous steady-state condition. This lack of change in magnitude made it difficult for a traditional phase-overvoltage element to detect this condition; however, a noticeable increase in 3V0 was measured, due to phase angle change on B-phase.

B. Site 2

The next event, shown in Fig. 3 illustrates a distortion increase on VAY and VAZ at the instance of the open-phase condition on the A-phase. This open-phase condition can be observed at approximately 0.16 seconds. The two-system-connected phases (VB and VC) remained relatively distortion-free during this time. This was the same behavior observed by the two-system-connected voltages during the first event in Fig. 2.

This event differed from the first because the fundamental frequency component of the open-phase voltage (VA) approached a higher level voltage of 1.5 pu. At approximately 0.27 seconds into the recorded event, the IBR overvoltage protection asserted and disconnected all three phases at the low-side ac contactor. Once the IBR was fully removed, the waveform distortion on the A-phase voltage transitioned from one mode of harmonics to another. The fundamental voltages also stabilized near 1 pu, causing the 3V0 measurement to decrease to a value of 0.16 pu.

Starting at the first voltage peak after the open-phase condition occurred at 0.16 seconds, there were noticeable spikes in the measured A-phase current. The current spikes aligned with the voltage peaks measured on VA and were attributed to the instantaneous overvoltage subjected to the system, forcing the A-phase arrestor(s) to conduct. These spikes in the A-phase current were no longer present at 0.27 seconds into the event when the IBR was removed from the system. Once the IBR was removed, low-levels of distorted currents were measured on B- and C-phase currents. These currents were attributed to transformer overexcitation, where an increase in magnetizing current could be observed.

The excessive voltages during this event were dangerous and could have led to premature failure of equipment (e.g., arrestor failure, insulation degradation, etc.) if the open-phase condition was not cleared quickly. During the event, this condition was eventually cleared by a manual trip that was initiated by on-site personnel. The signals at the time of the manual trip are not captured in Fig. 3.

C. Site 3

The third event presented in this paper is shown in Fig. 4. This staged test created an open-phase condition on the B-phase. This test was initiated at 0.12 seconds into this event record. At the time, a marginal change in the fundamental B-phase voltage magnitude was observed. There was only a marginal increase in waveform distortion for the B-phase in comparison to the large increase observed from the first two events. Although less than the other events, a noticeable increase in 3V0 was measured at the inception of the open-phase condition on the B-phase, until the relay at position R1 initiated a trip on all three phases at 0.29 seconds. As with Site 1, the three-phase trip in this event was initiated by the recloser control due to the assertion of the zero-sequence overvoltage logic, reviewed in Section V.

Once all three phases were isolated at R1, the IBR continued to energize all three phases for several cycles with an increase in distortion on all phases and a linear increase in voltage.

D. Site 4

Starting at 0.14 seconds, Fig. 5 demonstrates that dangerously high voltages can occur during open-phase conditions. The overvoltage in this event is caused by an open-phase condition on the C-phase and exceeded 2 pu. The level of measured overvoltages far exceeded prior events. This large increase in voltage magnitude also produced a large increase in the calculated 3V0. As in Fig. 3, the arrester on the staged open phase started to conduct during the excessive voltage peaks on the C-phase. A substantial amount of waveform distortion was also observed on the C-phase voltage. Conversely, A- and B-phase voltages remained relatively undisturbed while connected to the power system. After 0.29 seconds, the recloser at R1 isolated all three phases, as initiated by the recloser controls overvoltage protection (59P). Then, the IBR continued to sustain nominal voltages on the A- and B-phases. This behavior was unexpected, because these were grid-following inverters.

E. Site 5

The last event presented in this paper is from Site 5. The event record is displayed in Fig. 6. The C-phase connection between the IBR and utility was isolated at 0.14 seconds into the event. Approximately 0.22 seconds into the event, the IBR was removed from the system via the low-side ac contactor. As measured at previous sites, an increase in distortion occurred on the affected phase with a corresponding increase in the calculated 3V0. Even after the IBR was disconnected, the waveform distortion continued.

Once the IBR was disconnected from the transformer, the circuit effectively consisted of an unloaded YNy0 transformer, which was energized by two of the three phases of the power system (A- and B- phases). This distortion increase, when single phasing an unloaded transformer, has been documented in [12] and was attributed to ferroresonance. IEEE 1547.1-2020 acknowledges that tests and conditions are prone to stimulate a ferroresonance event [13].

Other interesting observations were made for this site. One observation was that the fundamental calculated magnitude varied on VC, which produced an oscillating 3V0 calculation throughout the event. Another observation was a noticeable increase in distortion that was only observed on the affected phase. This remained true for the VY measurements; however, in the case of the VZ measurements, all three phases showed an increase in signal distortion. It is important to note that the VY measurements were acquired from capacitive LEAs, whereas, the VZ measurements were obtained through VTs. In addition to the power transformer (T1), the VTs showed signs of ferroresonance. Therefore, in this event the LEA sensors provided better indication than the traditional VTs of the affected phase. Additionally, this event demonstrated the responsiveness of the inverter to such an event. As illustrated by the currents, the current injection ceased following this system condition; whereas, in other cases (Fig. 2 to Fig. 5), the current injection was sustained for longer periods.

F. Summary of Field Events

The event files recorded from several open-phase commissioning tests reveal excessively high voltages and increased waveform distortion. A dependable method to detect and quickly remove the open-phase condition becomes increasingly apparent.

Furthermore, the success of a current-based detection scheme can vary based on the CT ratios available for the application, relay sensitivity, IBR output level at the time of the event, and the duration that the IBR sustains its current output during the open-phase condition. As noted in the analysis of Fig. 6, the IBR can also quickly respond to this condition (using internal proprietary methods of the control system) making it even more challenging to detect this condition using the measured current. Therefore, to complement existing current based solutions [2] [3] [4] [5] [6], three voltage-based tripping schemes are assessed.

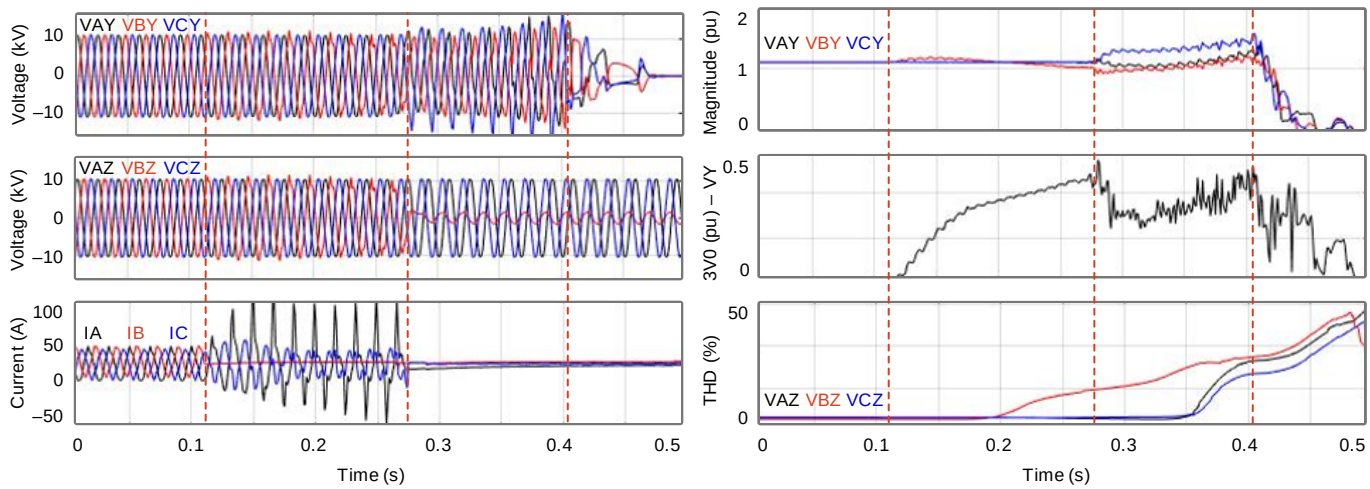

Fig. 2. Site 1 Measurements by R1 for Open B-Phase at R2

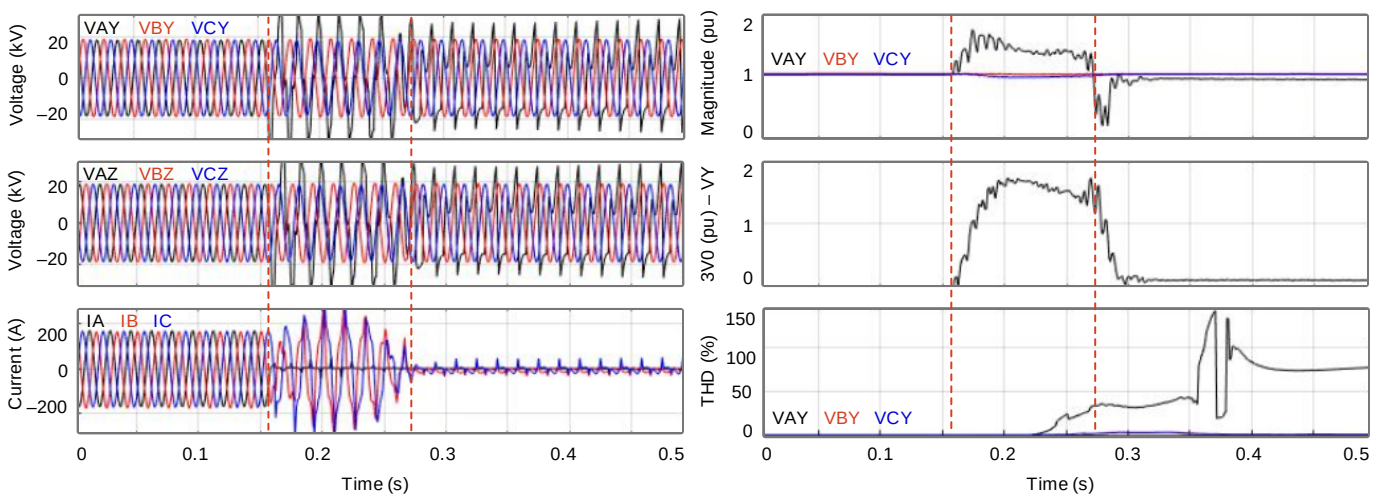

Fig. 3. Site 2 Measurements by R1 for Open A-Phase at R2

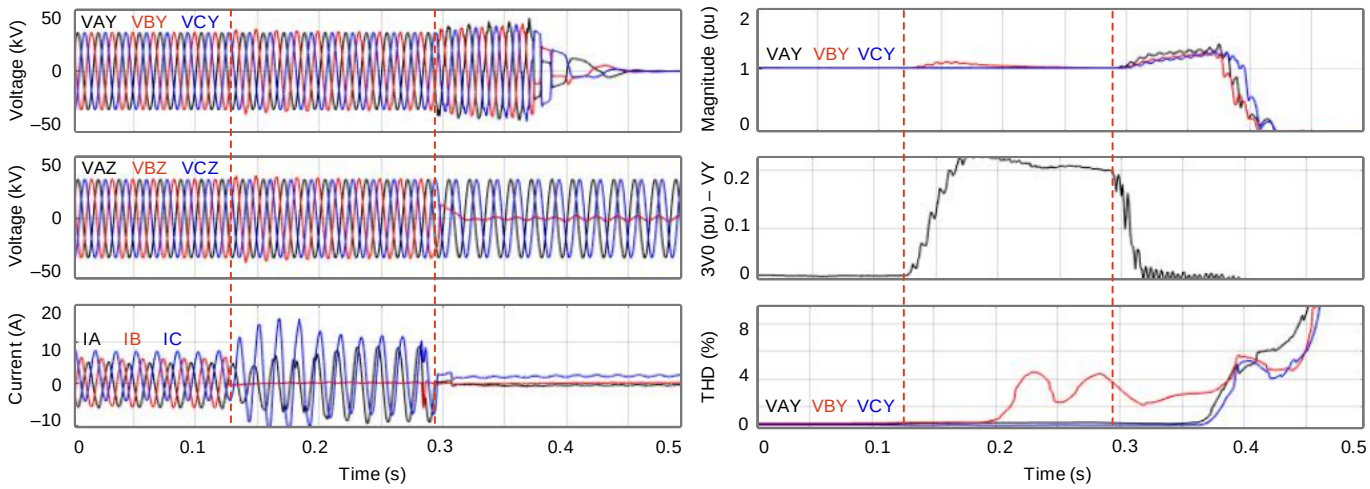

Fig. 4. Site 3 Measurements by R1 for Open B-Phase at R2

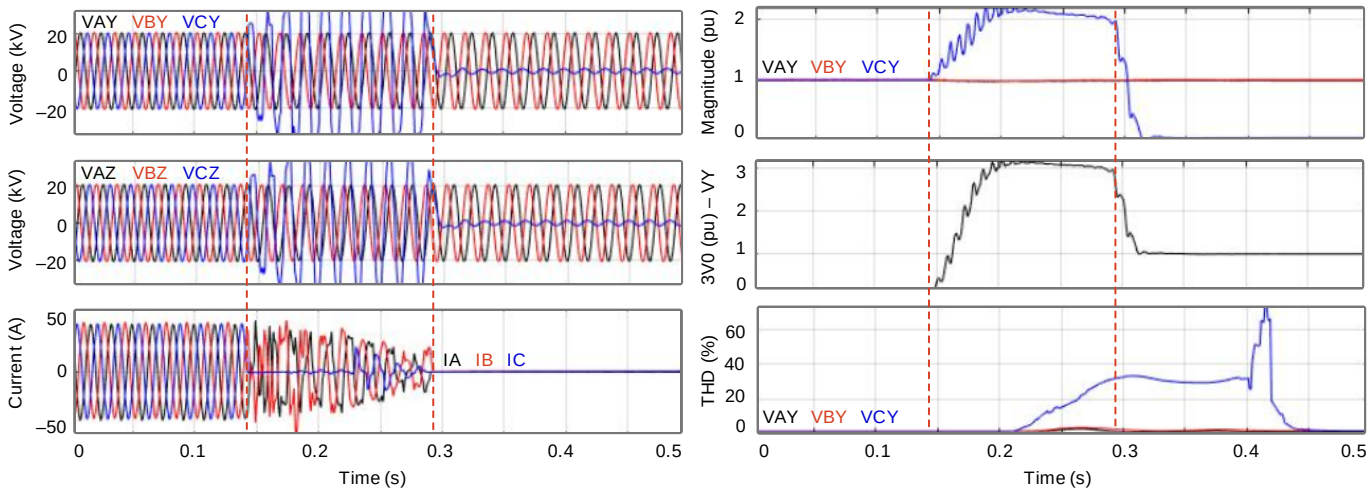

Fig. 5. Site 4 Measurements by R1 for Open C-Phase at R2

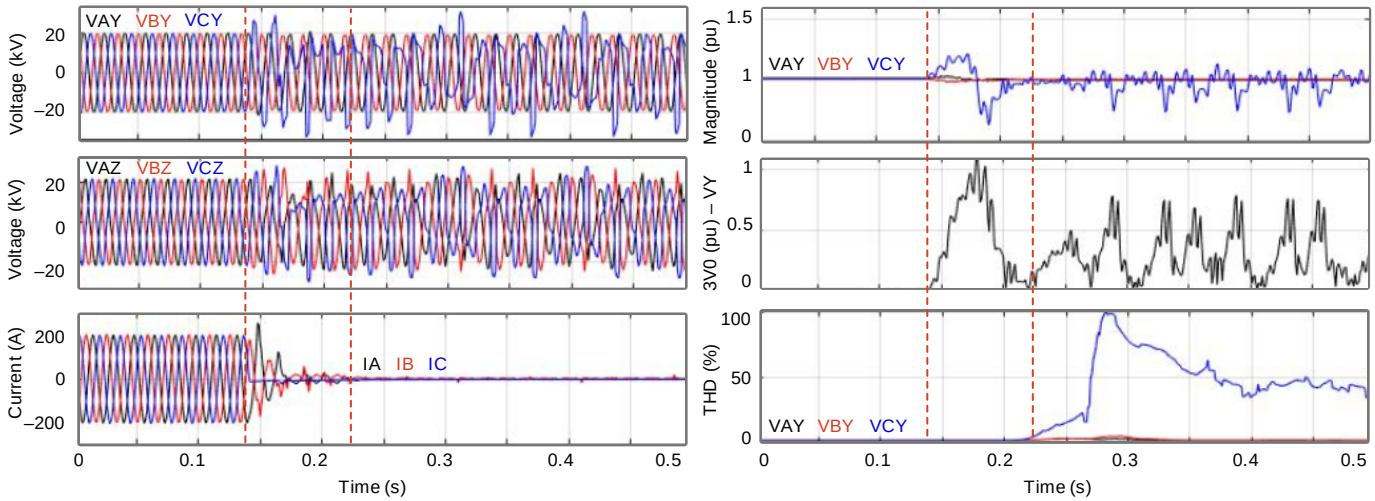

Fig. 6. Site 5 Measurements by R1 for Open C-Phase at R2

IV. IEEE-1547-2018 Voltage Tripping Requirements

It is common for recloser controls programmed at the PCC for interconnection protection to be set in accordance with the IEEE 1547-2018. In some cases, the pu system voltage may deviate from nominal for an open-phase condition, as observed in Section III. For this reason, the voltage tripping requirements of this standard act as one layer of voltage-based protection for open-phase events (see Table II).

Table II
Interconnection System Response to Abnormal Voltages
(IEEE 1547-2018 Category II) [1]

Shall Trip Function	Default Settings		Ranges of Allowable Settings	
	Voltage (pu of Nominal Voltage)	Clearing Time (s)	Voltage (pu of Nominal Voltage)	Clearing Time (s)
OV2	1.20	0.16	Fixed at 1.20	Fixed at 0.16
OV1	1.10	2.0	1.10–1.20	1.0–13.0
UV1	0.70	10.0	0.0–0.88	2.0–21.0
UV2	0.45	0.16	0.0–0.50	0.16–2.0

Note that the default clearing time setting for the Level 1 undervoltage element (UV1) is set beyond the two-second tripping requirement for an open-phase condition. Therefore, if this element were applied for open-phase detection, then the time delay should be revaluated.

V. Zero-Sequence Overvoltage Scheme

To complement existing current based solutions [2] [3] [4] [5] [6] and IEEE voltage tripping requirements [1], a simple scheme combining a zero-sequence overvoltage element with load and ground fault detecting elements is constructed using programmable logic within the recloser control to detect the open-phase condition. The logic is shown in Fig. 7 and Fig..

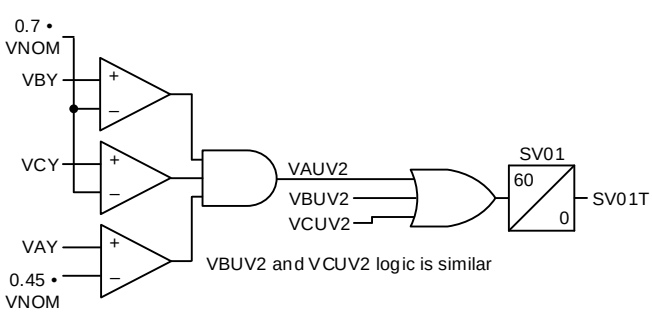

Fig. 7. Under-voltage Securing Logic for an Open-Phase Condition on the A-Phase

Although not displayed in the events in Fig. 2 to Fig. 6, it is understood that the open phase of a transformer can have an induced voltage from the magnetic coupling of energized phases. It has been documented that, in some cases, the induced voltage is about 50 percent of nominal system voltage [12]. This phenomenon has also been observed by the authors in other open-phase events acquired during field testing.

For this reason, two independent voltage thresholds are used in this logic. The voltage thresholds UV1 and UV2 (displayed in Table II) are selected in this scheme to prevent false assertions during transformer energization, secondary blown VT fuses, and other non-related events. The first voltage threshold (UV1) is set to 0.70 pu to ensure sufficient voltage is present on two of the three phases. As noted previously, the induced voltage of the open phase can be on the order of 0.50 pu; therefore, the second voltage threshold is set at 0.45 pu to increase the dependability of the scheme. If the measured voltage on the open phase were below 0.45 pu, then the IEEE-1547-2018 UV2 time delayed element would be relied on to trip. The overall time qualifier of SV01 is set to 60 cycles to ride through transformer inrush.

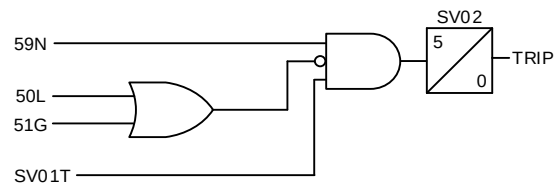

Fig. 8. 3V0 OPD Scheme

59N is the zero-sequence overvoltage element, which should be set above any standing 3V0 on the system. For this analysis, the pickup is set to 10 percent of nominal voltage. The inversion of the 51G element is intended to prevent miscoordination with sensitively set earth fault elements. The inversion of the load detector 50L (50L = 50A OR 50B OR 50C) is used to block the element if sufficient current is measured on any phase. If the current on any phase is above a set threshold, 50L becomes a logical 1. The 50L element is set at the minimum pickup threshold available on the in-service devices (0.05 A secondary). If 0.05 A secondary is measured on any phase, then the IEEE 1547-2018 voltage tripping elements, any current based scheme, and the V-THD scheme (reviewed in Section VI) remain in effect. Lastly, the overall scheme provides additional security for asymmetrical switching and other transient scenarios by using a 5-cycle time qualifier supervision for SV02T.

The logic in Fig. 8 takes advantage of the noticeable increase in measured 3V0 for the recorded events; however, in the case of Fig. 6, the varying 3V0 calculation produces a toggling SV02 and does not satisfy the time qualifier that is required to ride through asymmetrical switching (i.e., 5 cycles). This case also highlights the need for another voltage-based scheme to further increase dependability for such events. Additionally, the dependability of an OPD scheme using 3V0 may be limited depending on the loading level, transformer configuration or transformer core construction [2] [3] [4] [5] [6].

VI. V-THD Open-Phase Detection Scheme

It has been demonstrated that increased distortion can occur in the waveform when all three phases of the IBR are suddenly disconnected from the connected load and utility [14] [15]. As previously demonstrated in Fig. 2 to Fig. 6, this same phenomenon may occur on a single-phase when an open phase is present between the IBR and utility. To complement the 3V0 OPD scheme, these harmonic data can also be used in identifying an open-phase condition.

In most applications, a power quality and revenue meter is installed on-site and located nearby the recloser control. Advanced microprocessor-based meters have enhanced metering functions, such as harmonic and total-harmonic distortion metering capabilities. By using these devices, a simple voltage-based THD scheme is considered for tripping or alarming for an open-phase condition.

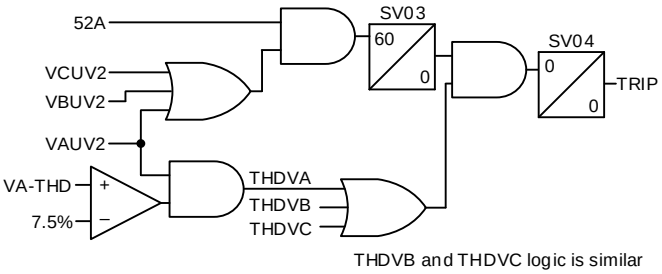

Fig. 9. V-THD Scheme

The logic evaluated the THD measured on each of the three phases. To satisfy the logic, one of three phases must measure THD content above a user-defined pickup. An additional qualifier to further secure the scheme ensures that sufficient voltage ($VpY > 0.7 \cdot V_{NOM}$) is measured on two of the three phases. The unhealthy phase is greater than the IEEE-1547-2018 UV2 threshold ($VpY > 0.45 \cdot V_{NOM}$) to secure the logic for a blown secondary fuse condition, as in the case of the 3V0 scheme. If the metering VTs are connected to the IBR side of the R1 recloser, then the recloser position status (52A) is not needed. However, if the metering VTs are connected to the utility side of the R1 recloser, then the 52A recloser position status is needed via hardwire I/O or peer-to-peer communications. The objective of this criterion is to secure the scheme for a transformer inrush condition. In these field cases, the metering VTs (V*p*Z) are installed on the utility side of V1. Therefore, if voltage is present on all three phases and the recloser is in the closed position for the duration of SV03PU, then transformer inrush is expected to have subsided, and the scheme remains secure. At the PCC, IEEE 519-2014 states that the THD percentage should not exceed five percent for a distribution bus voltage between 1 and 69 kV [16]. Therefore, the five percent limit is used as the baseline to set the pickup threshold, with an additional security margin of 1.5 to 2 times (i.e., 7.5 to 10 percent).

VII. Evaluation of Voltage-Based Schemes

In this section, we demonstrate the effectiveness of the Table II scheme and schemes introduced in Sections V and VI using the events retrieved during commissioning tests (Fig. 2 to Fig. 6). The raw event data were imported into MATLAB, where logic was built to mimic the response of in-service devices (recloser control and meter).

The relays installed at the PCC during these commission tests offer the ability to download stored events at different sampling rates (e.g., 16, 32, and 128 samples per cycle). The archived data have these various sampling rates. To maintain consistency in this evaluation and to satisfy the requirements of the Nyquist-Shannon sampling theorem, a THD calculation is performed up to seventh harmonic (420 Hz) on all system recorded events.

Additionally, for a metering device to follow the recommended practices of IEEE 519-2014, the measurement window for harmonics must be 12 cycles for a 60 Hz power system. This aligns with the window size for typical power quality measurement devices, so a 12-cycle measurement window is used for the THD calculations in this scheme.

For this evaluation, the user setting for qualifying sufficient fundamental frequency voltage is 70 percent of rated nominal voltage. The pickup threshold may be set, based on the measured system harmonics during the commissioning procedure outlined in IEEE 1547.1-2020. A 12-cycle measurement window offers some inherent security for short-duration system transients; however, a short time delay may be considered to further secure the logic when in-service. For this evaluation, the THD pickup threshold is set to 7.5 percent, which is 1.5 times the IEEE 519-2014 THD limit, and no delay is used.

These schemes are only evaluated during the time that the recloser position at R1 was closed (i.e., 52A = 1). Additionally, only the Level 2 IEEE 1547-2018 voltage elements (UV2 and OV2) are assessed due to the limited event record length and the time delays that are set in accordance with the default values assuming a 3-cycle recloser operating time (i.e., 9.6 cycles – 3 cycles = 6.6 cycles). The tested results are presented in Table III.

Table III
Performance of Voltage-Based Schemes

	Site 1	**Site 2**	**Site 3**	**Site 4**	**Site 5**
Maximum V-THD	9.56%	139.3%	4.50%	28.27%	101.6%
V-THD Scheme	True	True	False	True	True
Maximum 3V0	0.43 pu	1.69 pu	0.23 pu	3.16 pu	1.11 pu
3V0 Scheme	True	True	True	False	False
Maximum Voltage Magnitude	1.11 pu	1.70 pu	1.11 pu	2.14 pu	1.43 pu
IEEE 1547-2018 Scheme	False	False	False	True	False

Although an overvoltage greater than 1.1 pu is observed in all events, only one in five sites result in an OV2 assertion, due to the time qualification required to authorize a trip.

The data in

Table III shows that, when used in parallel, overvoltage elements using 3V0 and V-THD as operating quantities provide 100 percent dependability for an open-phase condition at these sites. An increase in 3V0 was measured in all events and the 3V0 scheme successfully operated in three of the five sites presented. In the case of Site 4, the load detectors blocked the 3V0 scheme from operating. In the case of Site 5, the 3V0 measurement exceeded the 0.1 pu threshold at times, but it never satisfied the time qualification to trip.

The V-THD scheme provided the best results and successfully detected the open phase for four of the five sites

detailed in this paper. Site 3 did exhibit an increase in distortion on the disconnected phase; however, it was not enough to exceed the 7.5 percent THD threshold.

Although effective in some cases, the tests show that the IEEE-1547-2018 voltage tripping requirements cannot be solely relied on for voltage-based protection. Both 3V0 and V-THD schemes offer dependable open-phase detection using off-the-shelf equipment.

The 3V0 and V-THD overvoltage logic have been installed using in-service equipment. To date, when using the recommended thresholds, no misoperations were observed during the time the logic was in service.

VIII. Conclusion

Current-based schemes that have been applied to detect an open-phase condition may not be dependable for an open-phase condition in systems with IBRs. The lack of dependability may be due to insufficient wind or low solar irradiance, response of the IBR control system, limitations of CT ratios, or even the type test requirements of IEEE 1547.1-2020.

In this paper, overvoltage elements operating on 3V0 or V-THD quantities were used to create a protection scheme to detect and trip for an open-phase condition. Both schemes were applied at the PCC using off-the-shelf equipment. The zero-sequence overvoltage scheme was implemented in a microprocessor-based recloser controller with programmable logic. The V-THD scheme was implemented using programmable logic in a microprocessor-based meter. The 3V0 element pickup is set based on the maximum voltage unbalance during load. The V-THD threshold was set above the maximum recommended V-THD (as defined in IEEE 519-2014), including additional security margin.

Both schemes were tested in the field and demonstrated a high level of dependability compared to existing techniques used to detect an open-phase condition within the requirements specified in IEEE 1547-2018. The schemes remained secure for other conditions such as faults, switching or a fuse failure.

IX. References

[1] IEEE 1547-2018, Standard for Interconnection and Interoperability of Distributed Energy Resources with Associated Electric Power Systems Interfaces.

[2] M. Ropp, D. Schutz, S. Perlenfein, and C. Mouw, “Single-Phase Open Detection in the Presence of Distributed Energy Resources,” proceedings of the Western Protection Relay Conference, Spokane, WA, 2017.

[3] J. Horak, G. Johnson, “A Practical Guide for Detecting Single-Phasing on a Three-Phase Power System,” proceedings of the Western Protection Relay Conference, Spokane, WA, 2002.

[4] EPRI, “Development and Analysis of an Open-Phase Detection Scheme,” September 2012.

[5] “Methods for Detecting and Analyzing an Open Phase Condition of a Power Circuit to a Nuclear Plant Station Service or Startup Transformer,” PES-TR75, January 2020.

[6] K. Dase, S. Harmukh and A. Chatterjee, “Detecting and Locating Broken Conductor Faults on High-Voltage Lines to Prevent Autoreclosing Onto Permanent Faults,” October 2019. Available: https://selinc.com.

[7] IEEE 1547.1-2020, Standard Conformance Test Procedures for Equipment Interconnecting Distributed Energy Resources with Electric Power Systems and Associated Interfaces.

[8] R. Chowdhury and N. Fischer, “Transmission Line Protection for Systems with Inverter-Based Resources – Part I: Problems,” *IEEE Transactions on Power Delivery*, August 2020.

[9] R. Chowdhury and N. Fischer, “Transmission Line Protection for Systems with Inverter-Based Resources – Part II: Solutions,” IEEE Transactions on Power Delivery, October 2020.

[10] F. Pazos, “Power Frequency Overvoltages Generated by Solar Plants,” 20th International Conference and Exhibition on Electricity Distribution – Part 1, Prague, Czech Republic, June 2009, pp. 1–4.

[11] A. Nelson, et al., “Experimental Evaluation of Load Rejection Over-Voltage From Grid-Tied Solar Inverters,” 42nd Photovoltaic Specialist Conference, New Orleans, LA, December 2015, pp. 1–6.

[12] B. Mork, “Understanding and Dealing with Ferroresonance,” November 2006. Available: http://www.ece.mtu.edu/faculty/bamork/ee5220/Deal_FR.pdf

[13] IEEE 1547.1-2005, Standard Conformance Test Procedures for Equipment Interconnecting Distributed Resources with Electric Power Systems, July 2005, pp.1–62.

[14] Ruchika, P. Gupta, D. Jain, and R. Bhatia, “Islanding Detection Technique for a Distributed Generation With Perfectly Matched Load Condition,” International Conference on Computing, Communication and Automation, Greater Noida, India, May 2017, pp. 1503–1506.

[15] R. Bravo, R. Yinger, S. Robles, and W. Tamae, “Solar PV Inverter Testing for Model Validation,” IEEE Power and Energy Society General Meeting, Detroit, Michigan, July 2011, pp. 1–7.

[16] IEEE 519-2014, Recommended Practice and Requirements for Harmonic Control in Electric Power Systems, June 2014, pp.1–29.

X. Biographies

James Gahan received a BS in electrical engineering in 2008 from California Polytechnic State University in San Luis Obispo, CA. Since 2006, he has served in a technical engineering capacity in the solar photovoltaic industry. He was involved in all aspects of a project's lifecycle, including development, detailed design, permission, installation, commissioning, operations, and maintenance. His knowledge of electrical power systems includes transmission planning, substations, distribution, protection, controls, grounding, SCADA, and communication systems.

Ariel Valdez earned his BSEE from Virginia Tech in 2008 and holds his PE in Virginia. He has over fifteen years of power system experience in various engineering and operational roles. Currently, he is a senior engineer with Dominion Energy in distribution technical operations. He is involved in DER integration standards, power quality, and reliability.

Brett Cockerham earned his BS in electrical engineering technology, summa cum laude, in 2014 and his M.Sc. in applied energy and electromechanical systems in 2016. Both degrees were awarded by the University of North Carolina at Charlotte. In 2014, Brett joined Schweitzer Engineering Laboratories as an application engineer focusing on power system protection and control.

Ritwik Chowdhury received his bachelor of engineering degree from the University of British Columbia and his master of engineering degree from the University of Toronto. He joined Schweitzer Engineering Laboratories, Inc. in 2012, where he has worked as an application engineer and is presently a senior engineer in the Research and Development division. Ritwik holds 4 patents and has authored over 15 technical papers in the area of power system protection and point-on-wave switching. He is a member of the main committee and a member of the rotating machinery, system protection and relaying practices subcommittees of the IEEE PSRC committee. He is a senior member of the IEEE and a registered professional engineer in the province of Ontario.

John Town received a BS in electrical engineering in 2009 and an MS specializing in power systems in 2014, both from Michigan Technological University. He joined Schweitzer Engineering Laboratories, Inc. (SEL) in 2014 as an application engineer, focusing on system protection. Prior to joining SEL, he spent seven years designing and commissioning power system protection schemes.

© 2021 by Cypress Creek Renewables, Dominion Energy, and
Schweitzer Engineering Laboratories, Inc.
All rights reserved.
20210312 • TP7003-01