Field Experience With Open-Phase Testing at Sites With Inverter-Based Resources

Ariel Valdez
Dominion Energy

James Gahan
Cypress Creek Renewables

Brett Cockerham, Ritwik Chowdhury, and John Town
Schweitzer Engineering Laboratories, Inc.

© 2021 Dominion Energy, Cypress Creek Renewables, and SEL

Overview

Review IEEE 1547.1-2020 for staged single-phase testing and system protection

Review field events of open-phase commissioning tests at PCC

Propose new protection scheme using 3V0 and V-THD elements to detect open-phase conditions

Open-phase detection test

IEEE 1547.1-2020

Open-phase condition must be tested while IBR is operating at greater of the following two levels

- Five percent of rated output current
- DER minimum output current

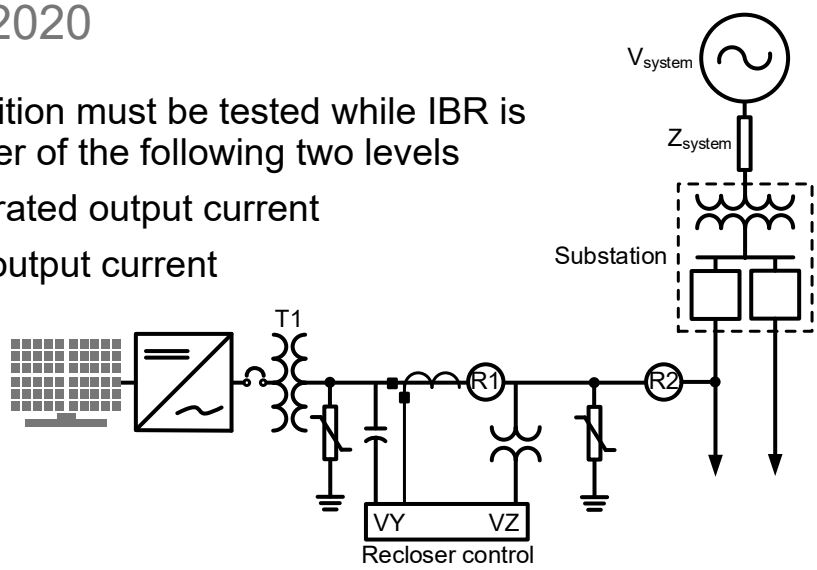

Typical pole-top recloser installation

Recloser R1

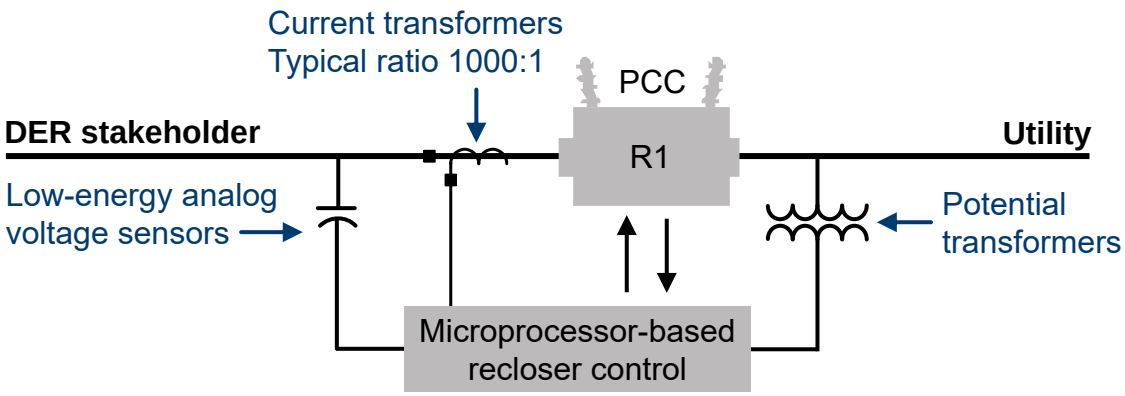

IEEE 1547-2018 voltage protection

Traditional voltage elements may not be enough

Shall trip function	Default settings		Ranges of allowable settings	
	Voltage (pu of nominal voltage)	Clearing time (s)	Voltage (pu of nominal voltage)	Clearing time (s)
OV2	1.2	0.16	Fixed at 1.20	Fixed at 0.16
OV1	1.1	2	1.10–1.2	1.0–13
UV1	0.7	10	0.0–0.88	2.0–21
UV2	0.45	0.16	0.0–0.5	0.16–2

Analysis of field events

Event analysis overview

- Events were collected from open-phase commissioning tests performed at PCC sites across the U.S.
- Similar observations could be made after analyzing several field events
- Results of event analysis can be summarized and clearly explained by presenting five events from five different PCC sites

Site 1

Open-phase commissioning test on B-phase

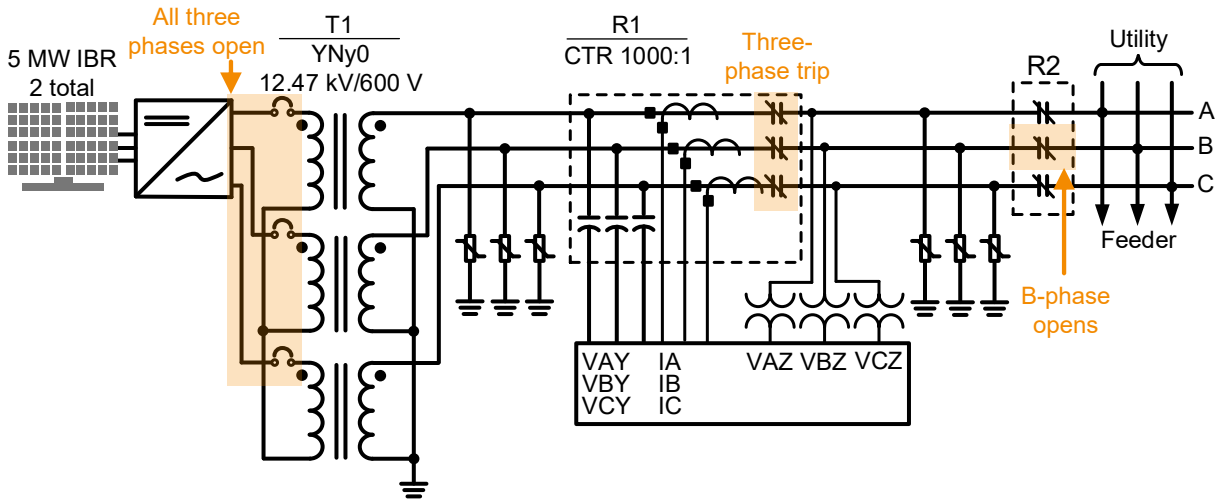

Site 1 measured phase voltages and currents

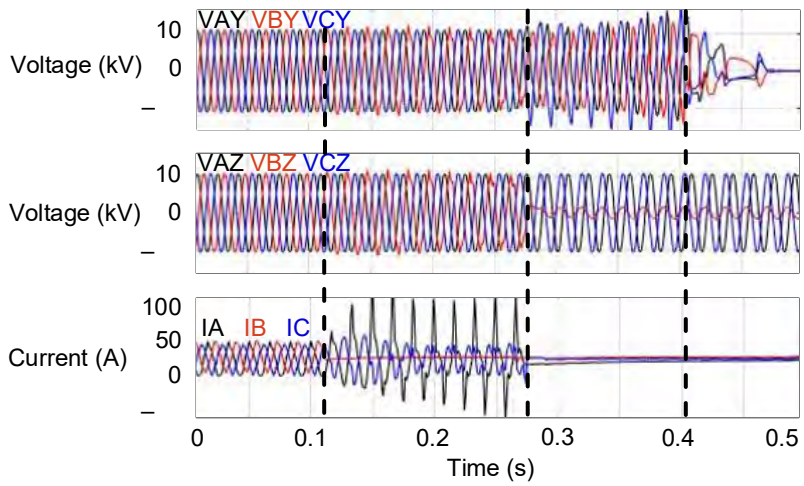

Site 1 measured voltage magnitude and THD

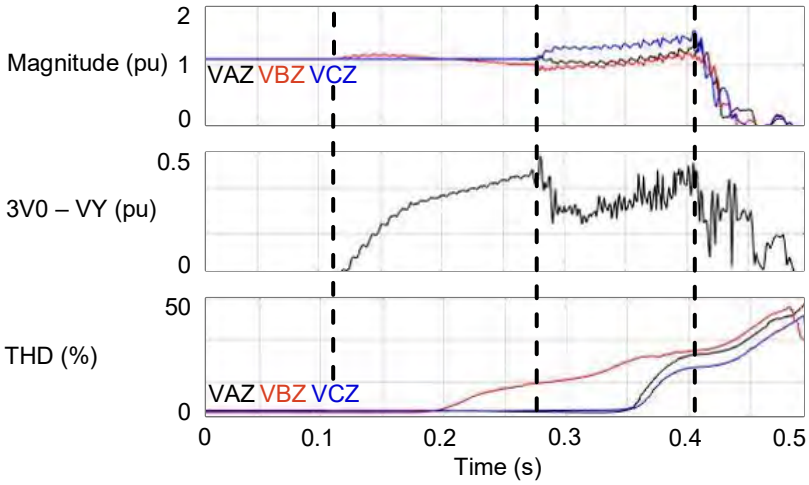

Site 2

Open-phase commissioning test on A-phase

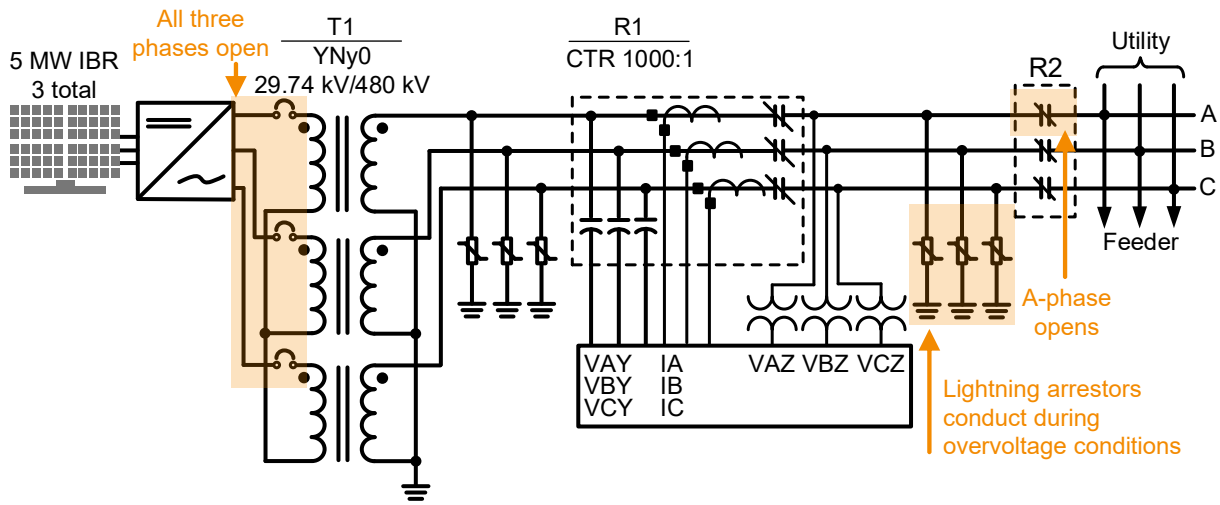

Site 2 measured phase voltages and currents

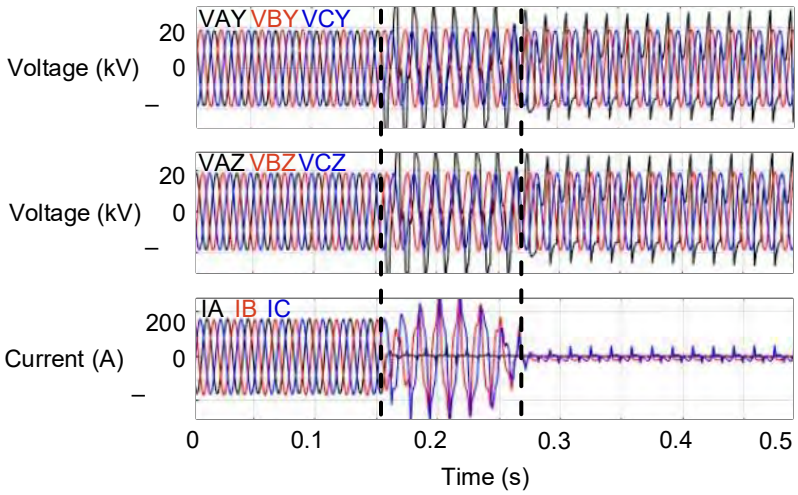

Site 2 measured voltage magnitude and THD

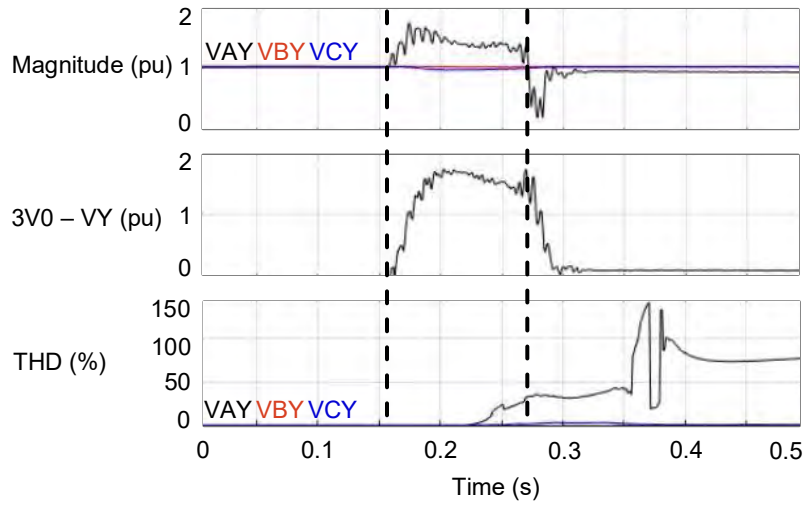

Site 3

Open-phase commissioning test on B-phase

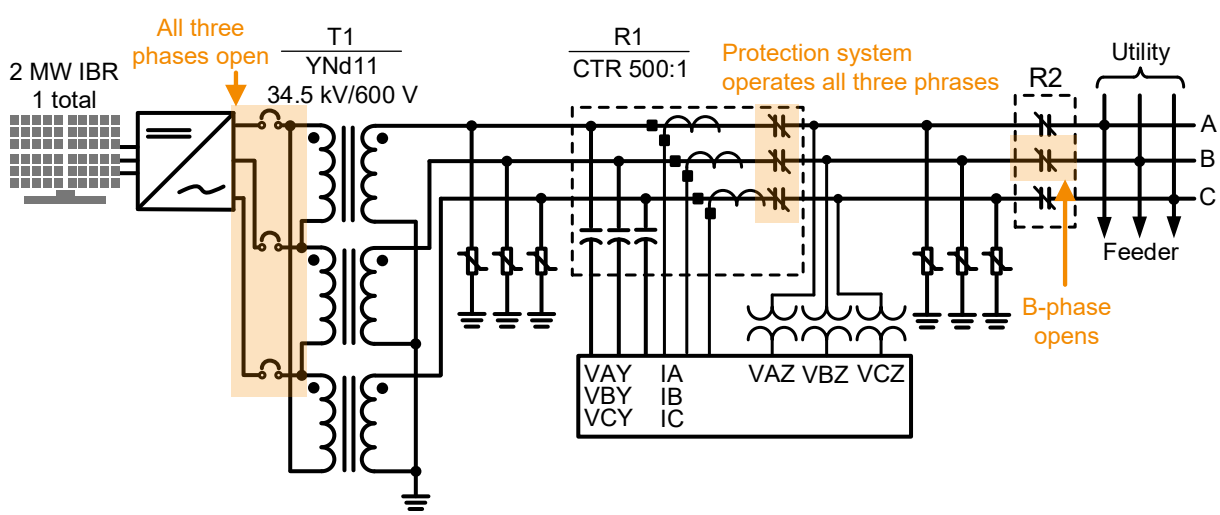

Site 3 measured phase voltages and currents

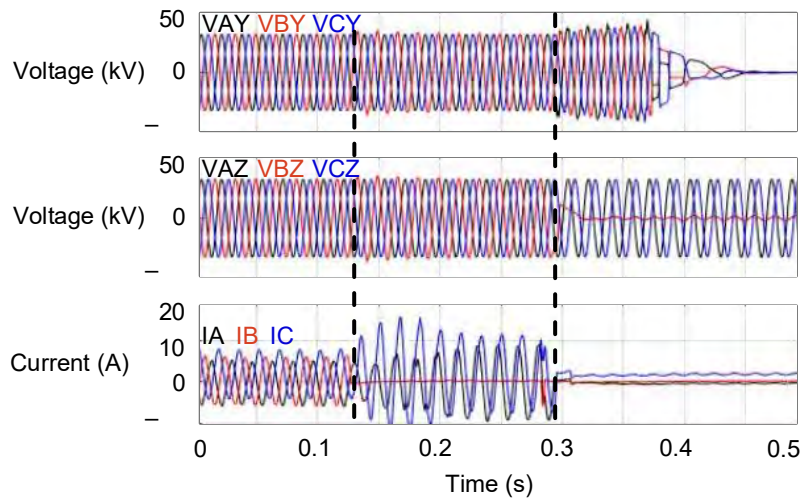

Site 3 measured voltage magnitude and THD

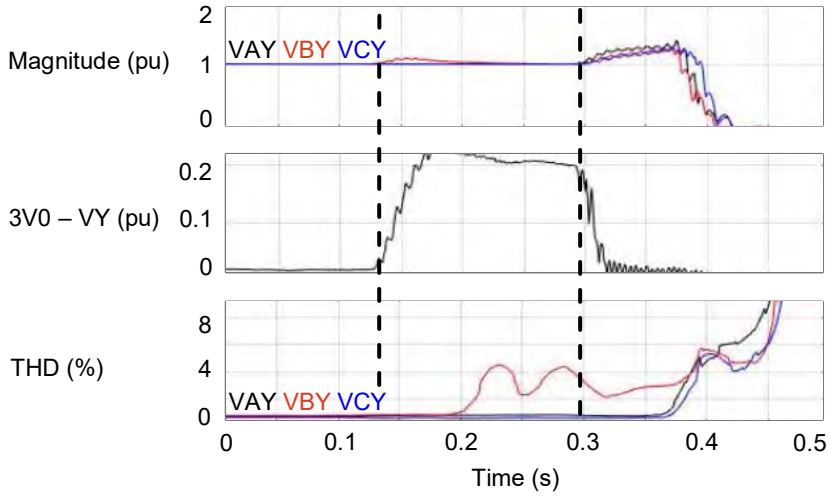

Site 4

Open-phase commissioning test on C-phase

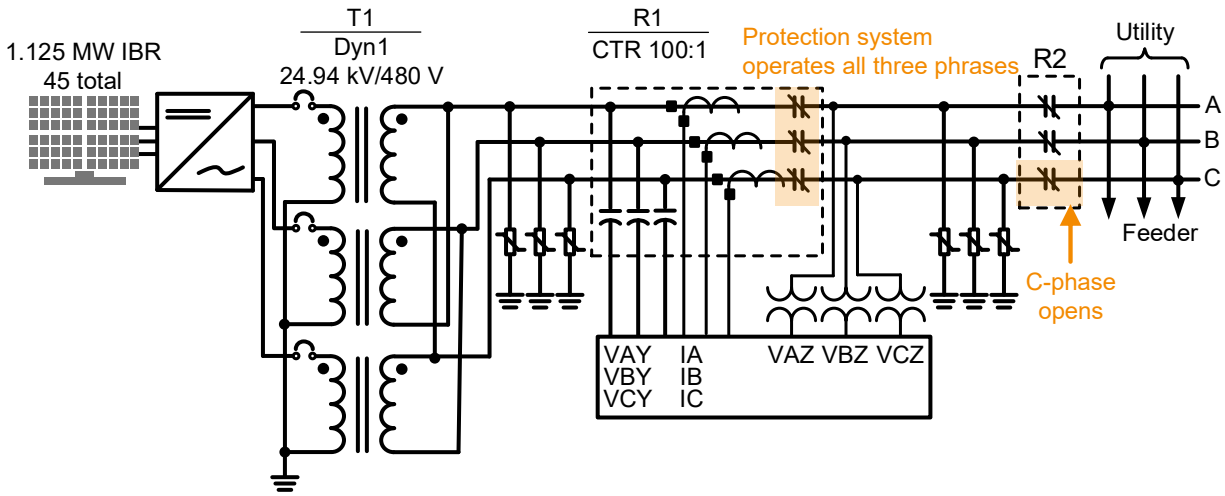

Site 4 measured phase voltages and currents

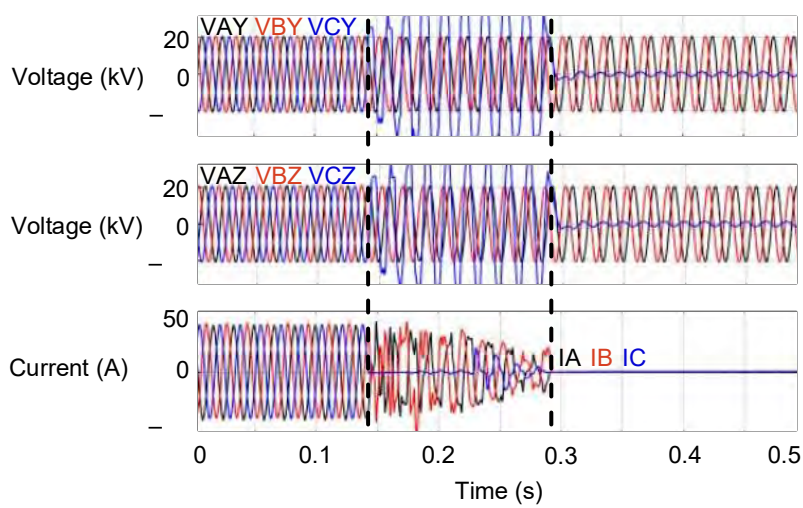

Site 4 measured voltage magnitude and THD

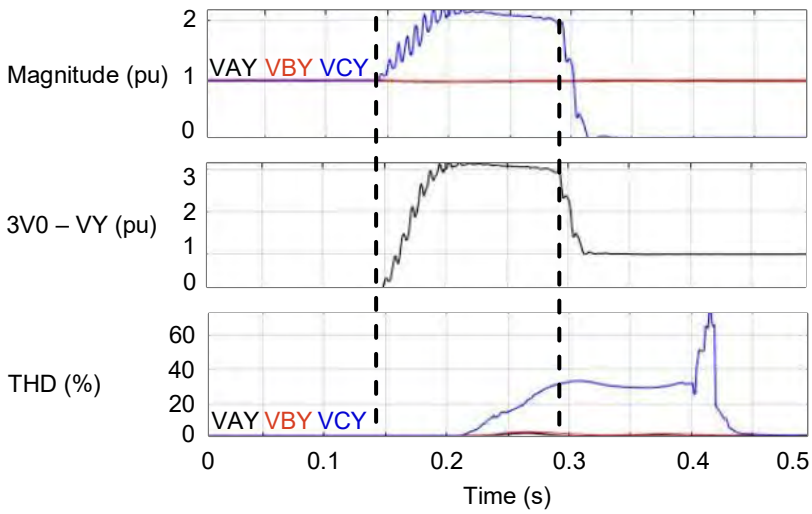

Site 5

Open-phase commissioning test on C-phase

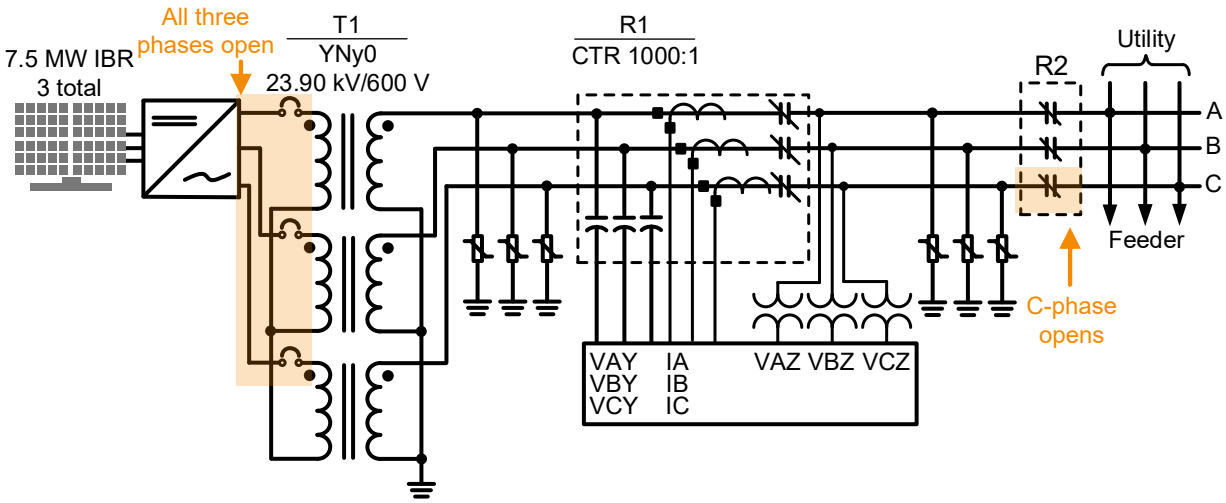

Site 5 measured phase voltages and currents

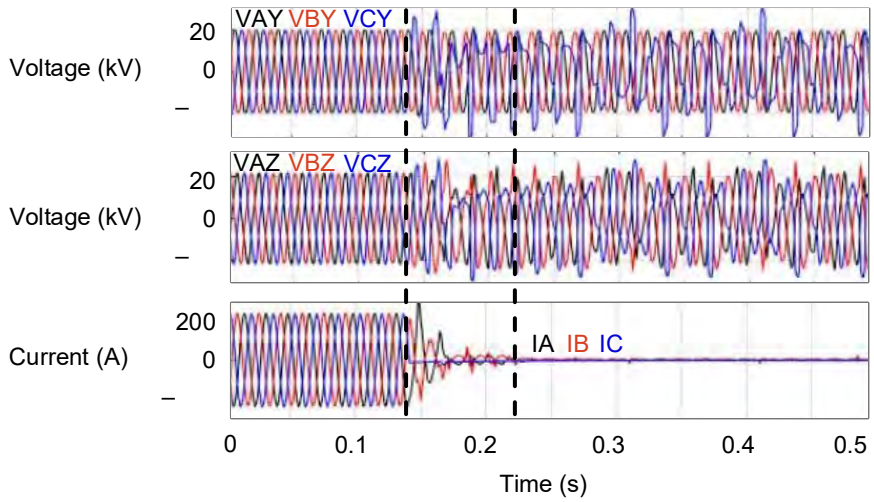

Site 5 measured voltage magnitude and THD

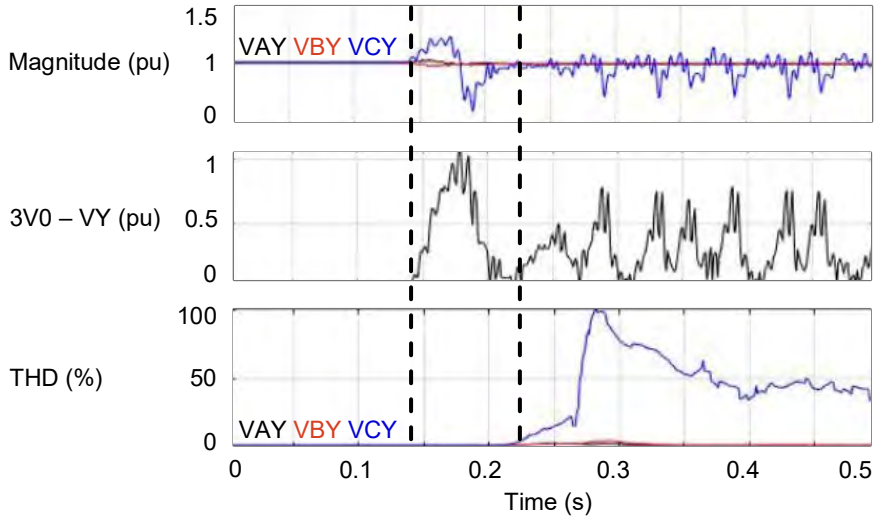

Proposed open-phase detection scheme

Undervoltage securing logic

A-phase

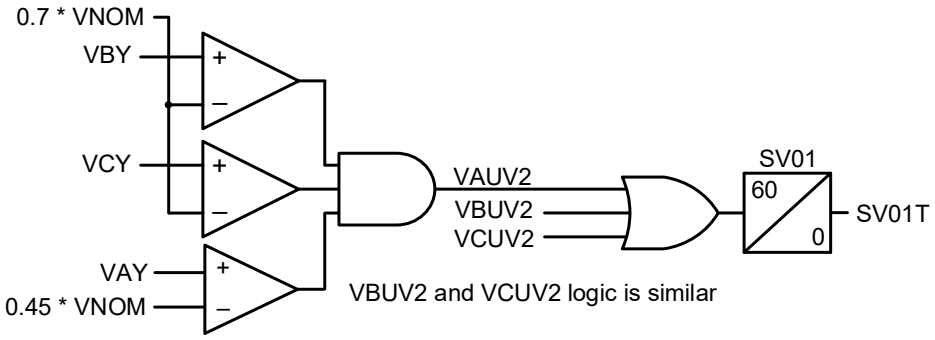

Zero sequence overvoltage element
Operating quantity

- 59N pickup threshold was to set ten percent of nominal secondary voltage for analysis
- Pickup setting can be set by users
- Pickup should be set above system unbalance created during maximum load for security reasons

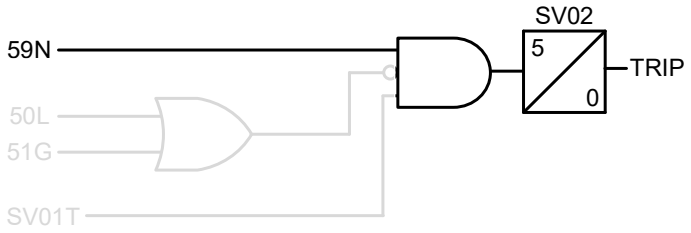

Zero sequence overvoltage element current and voltage supervision

- Load current detector threshold (50L) was set to 0.05 A secondary during analysis
- Relay Word bits 50L and 51G were inverted to prevent element from operating during load or fault conditions
- SV01T is voltage supervising logic

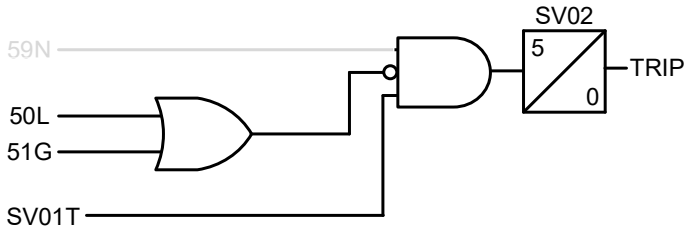

V-THD open-phase detection scheme

Operating quantity

- V-THD pickup setting of 7.5 percent was used for analysis
- Pickup value was selected to coordinate with IEEE 519-2014

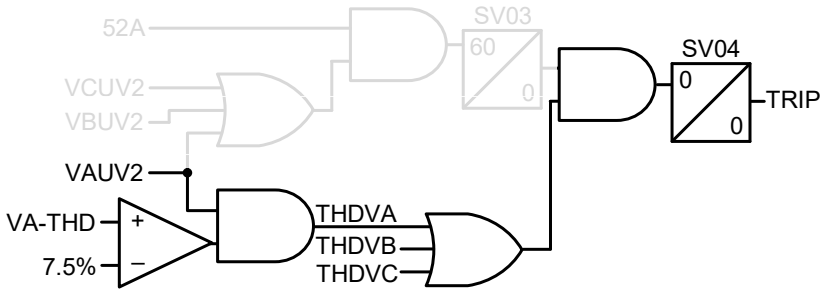

THDVB and THDVC logic is similar

V-THD open-phase detection scheme

Voltage and inrush supervision

- Timer (SV03) has pickup timer of 60 cycles, allowing scheme to restrain during inrush
- Undervoltage securing logic and breaker status are timer inputs

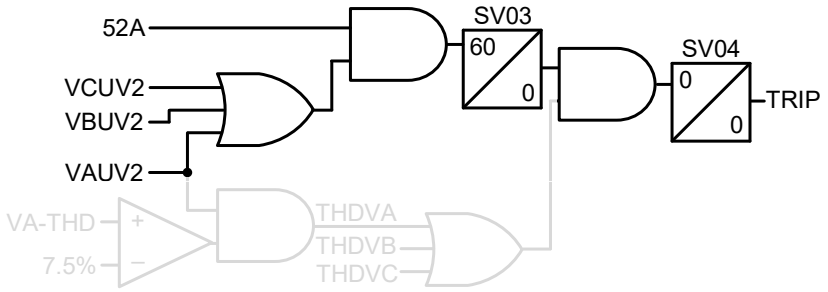

THDVB and THDVC logic is similar

Open-phase detection scheme performance

	Site 1	Site 2	Site 3	Site 4	Site 5
Maximum V-THD	9.56%	139.3%	4.50%	28.27%	101.6%
V-THD scheme	True	True	False	True	True
Maximum 3V0	0.43 pu	1.69 pu	0.23 pu	3.16 pu	1.11 pu
3V0 scheme	True	True	True	False	False
Maximum voltage magnitude	1.11 pu	1.70 pu	1.11 pu	2.14 pu	1.43 pu
IEEE 1547-2018 scheme	False	False	False	True	False

Conclusion

- IEEE 1547.1-2020 requires detection for an open-phase condition that may lead to dangerous overvoltage conditions on power systems and subsequent equipment failure
- These conditions can be difficult to detect with phase-overvoltage elements or current-based detection schemes
- 3V0 and V-THD elements applied together can provide secure and dependable protection schemes that detect and operate for open-phase conditions at PCC

Questions?