Transmission Line Protection for Systems With Inverter-Based Resources

Ritwik Chowdhury and Normann Fischer
Schweitzer Engineering Laboratories, Inc.

© 2020 SEL

Overview

- Study system
- Line protection elements
- Conventional line protection performance
- Line protection for systems with IBRs
- Application considerations
- Conclusion

Study system

- 4 IBR OEMs
  - OEM1 Type 4 Wind ★
  - OEM2 Type 4 Wind
  - OEM3 Type 3 Wind ★
  - OEM4 PV Solar
- AG, ABG, AB, and ABCG
- 0 Ω and 5 Ω
- 7 fault locations

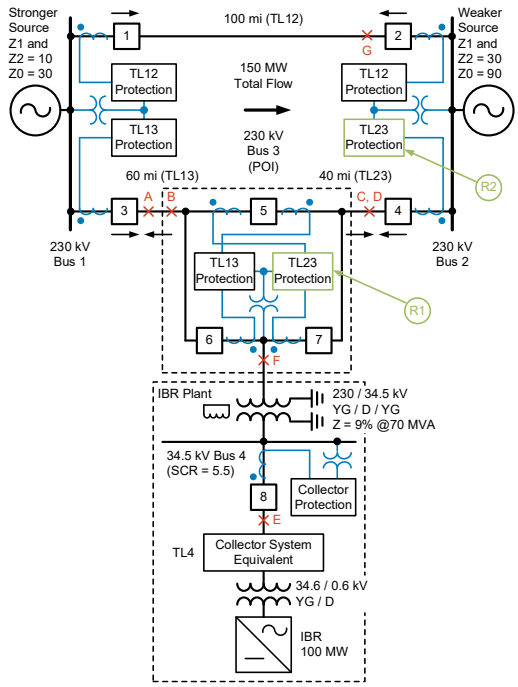

Study system

Location	Scenario and contingency
A	Fault on TL13 near Bus 1 TL12 out of service
B	Fault on TL13 near Bus 3 no outages
C	Fault on TL23 near Bus 3 TL12 out of service
D	Fault on TL23 near Bus 3 TL13 out of service
E	Fault on TL4 near Bus 4 no outages
F	Fault on Bus 3 no outages
G	Fault on TL12 near Bus 2 TL13 out of service

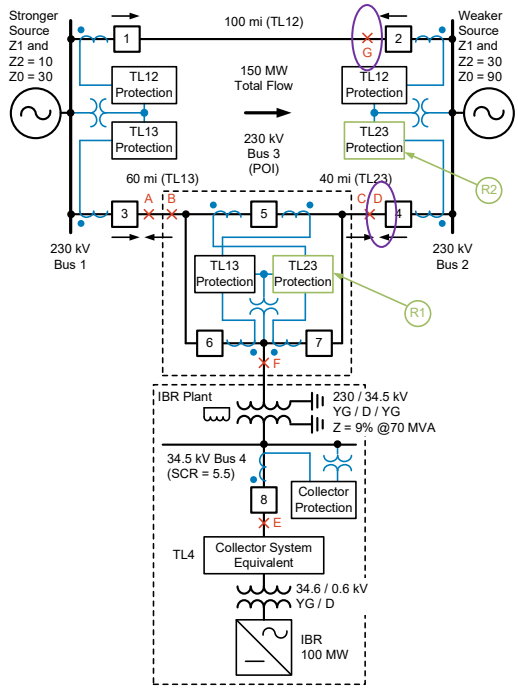

Distance element (21)

- Apparent impedance is less than set reach
- Loop current greater than fault-detector threshold (Zone 1)
- Directional element supervision (forward / reverse)
- FIDS logic does not block element
- No CVT transients detected (Zone 1)

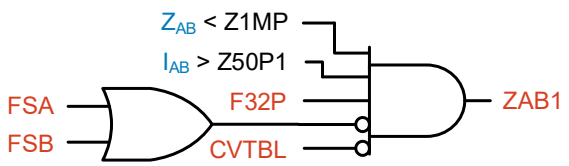

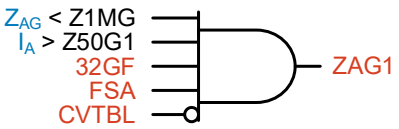

Directional element (32)

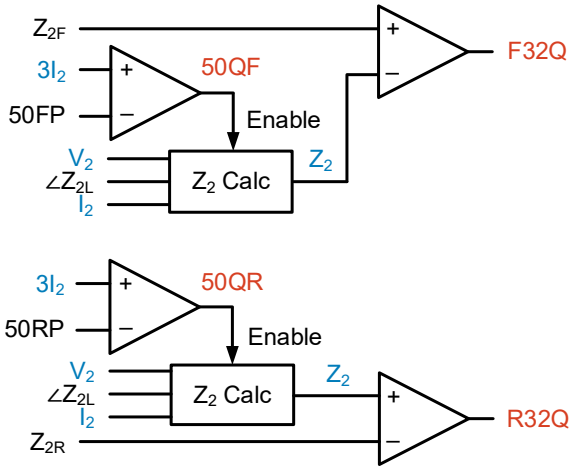

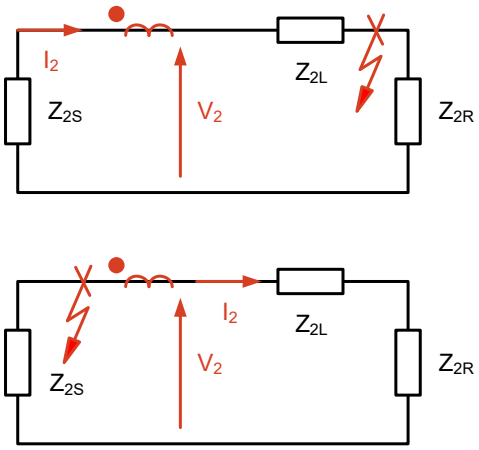

Phase and ground directional elements

Phase directional (32P)

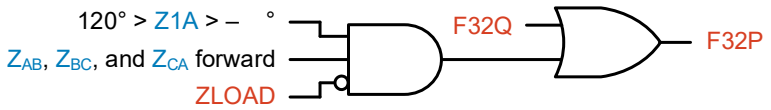

Ground directional (32G)

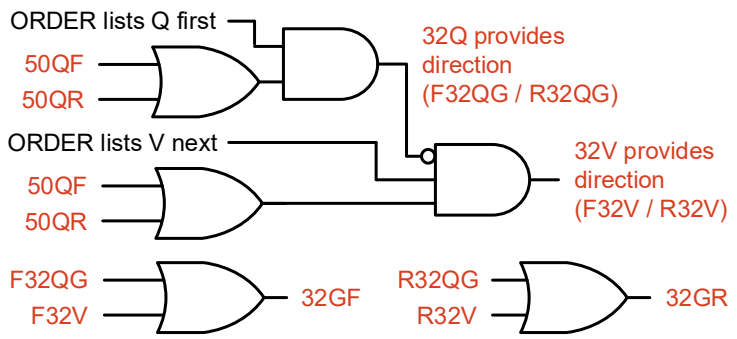

FIDS – ABG fault

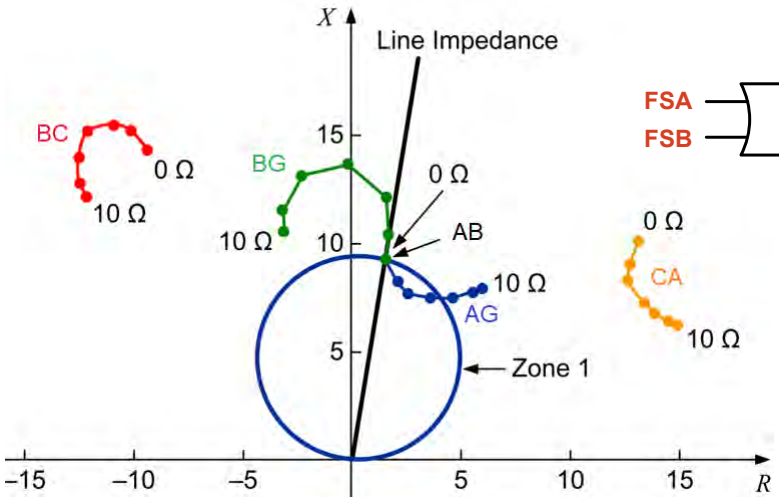

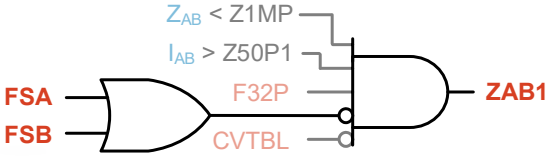

Conventional line protection performance

Weak vs. strong terminal relays

Security and dependability

- 32 – forward and reverse
- FIDS – overreaching loops blocked
- 21 – Zone 1 no misoperation due to overreach
- 21 – Zone 2 dependable backup
- 87L – internal vs. external

Location	32	FIDS	21Z1	21Z2	87L
Weak terminal relay					
A	100%	100%	100%	100%	100%
B	100%	100%	100%	100%	100%
C	100%	100%	100%	100%	100%
D	68%	87%	89%	56%	100%
E	100%	100%	100%	100%	100%
F	100%	100%	100%	100%	100%
G	68%	87%	89%	56%	100%
Strong terminal relay					
A	100%	100%	100%	100%	100%
B	100%	100%	100%	100%	100%
C	100%	100%	100%	100%	100%
D	100%	100%	100%	100%	100%
E	100%	100%	100%	100%	100%
F	100%	100%	100%	100%	100%
G	68%	87%	75%	75%	100%

Internal ABG fault (Location D)

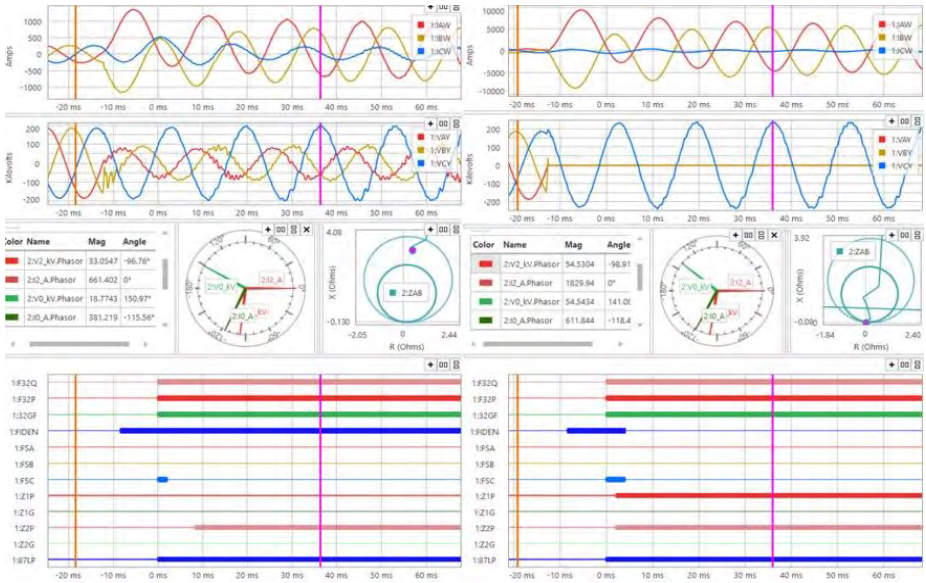

Type 4 Wind ABG fault

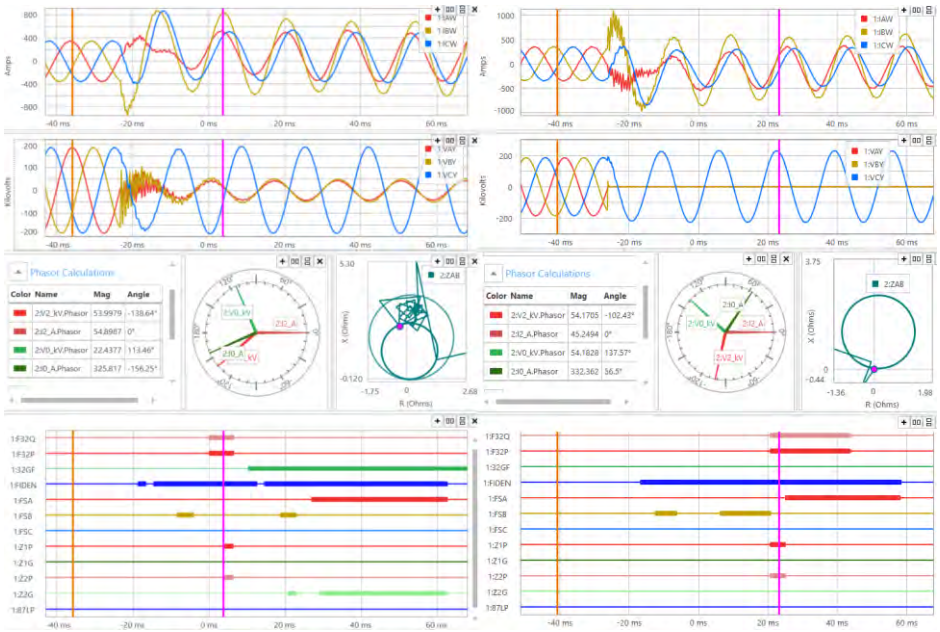

Type 4 Wind ABG fault

Sequence element behavior

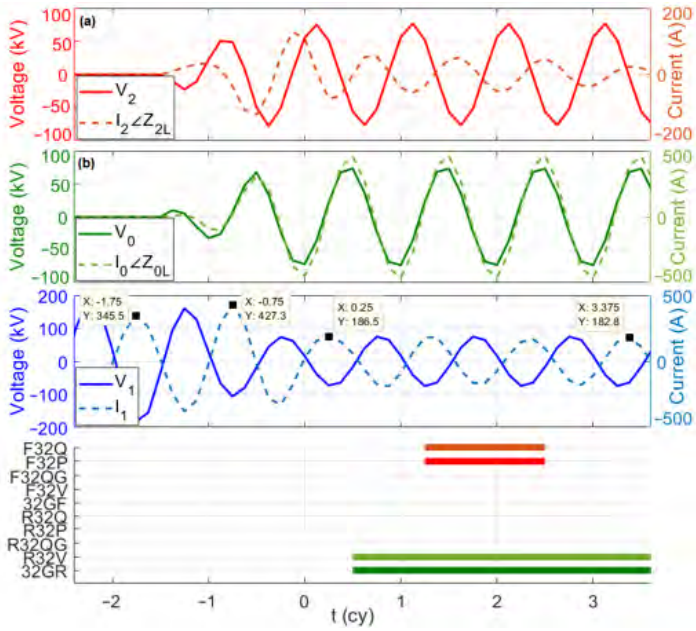

Type 3 Wind ABG fault

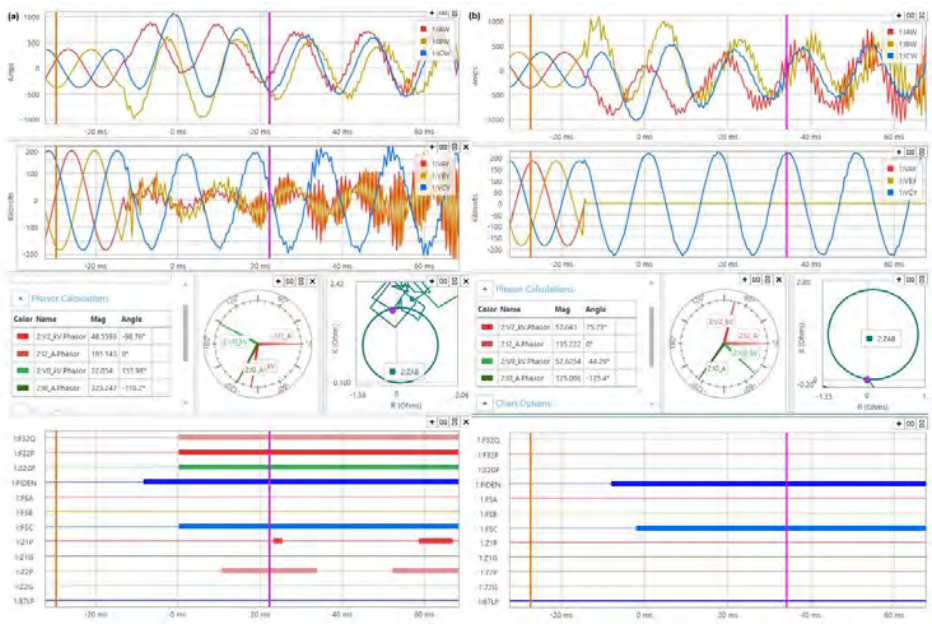

Type 3 Wind ABG fault

Sequence element behavior

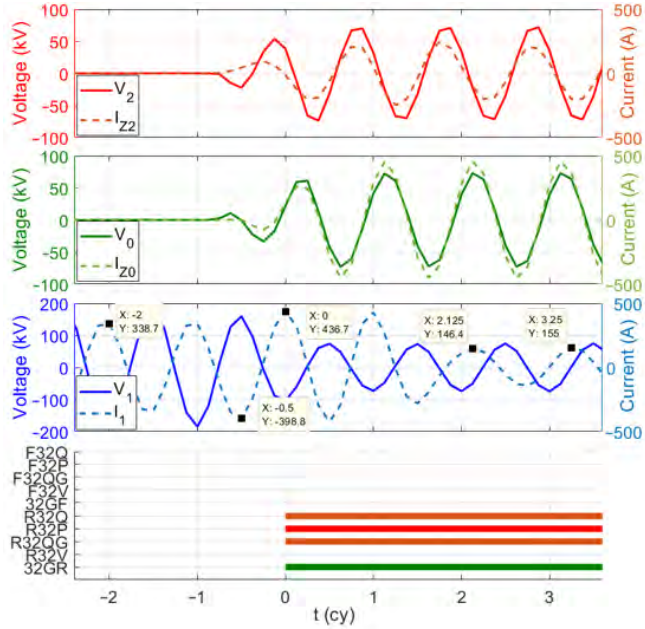

Type 3 Wind ABCG fault

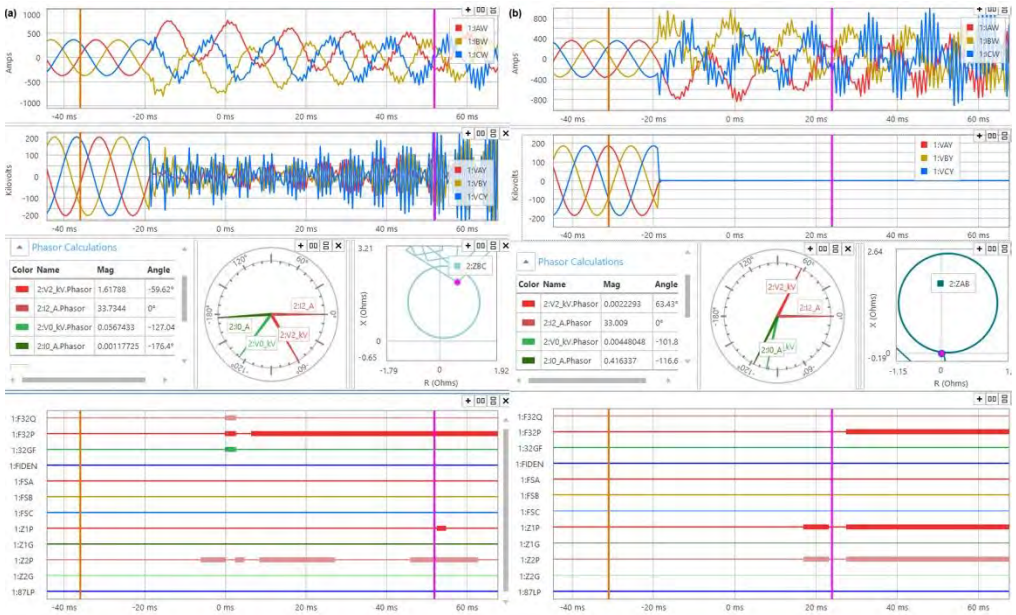

Line protection for systems with IBRs

Operating principle

- Inverters are current-limited to thermally protect power electronics switches, typically 1.10 to 1.30 pu
- Some IBRs lower negative sequence ($3I_2$) to not exceed dc bus capacitor ratings

$$I_{MAX} = 1. \quad \bullet \frac{S_{IBR}}{\sqrt{\ } \bullet V_{HV} \bullet CTR}$$

$$I_{MAX} = 1. \quad \bullet \frac{1 \quad e6}{\sqrt{\ } \bullet 2 \quad e \quad \bullet 2} = 1.6 \quad A$$

Issue 1 – Improving directional and fault type

- Increase overcurrent supervisory thresholds to improve 32Q security and FIDS security and dependability
- Lower fault resistance coverage to ~100 Ω

  50FP = 1.25 pu • I_{MAX}

  50RP = 1.00 pu • I_{MAX}

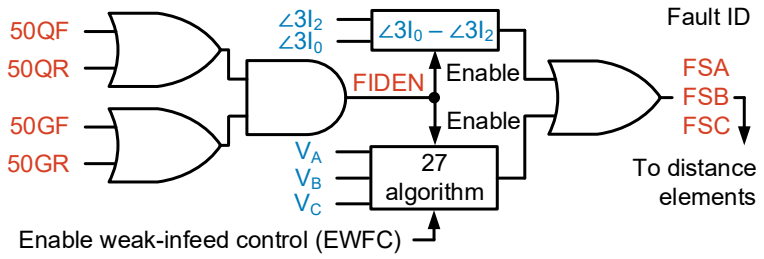

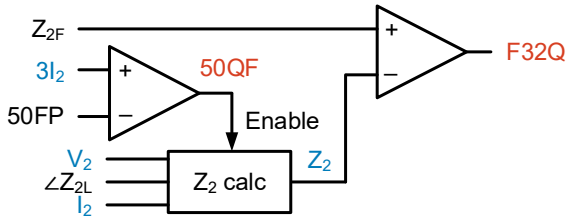

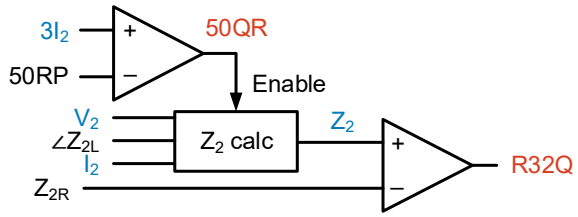

Issue 2 – Phase directional security for three-phase faults

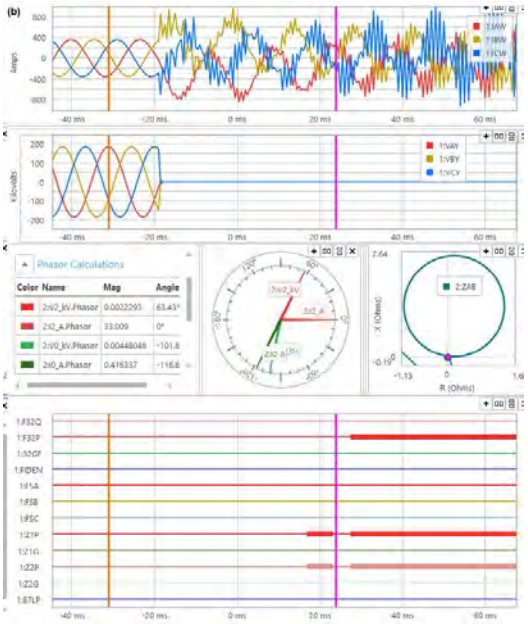

Issue 3 – Phase Zone 1 security

$$Z50P1 = 2 \cdot (1.2 \quad pu \cdot I_{MAX})$$

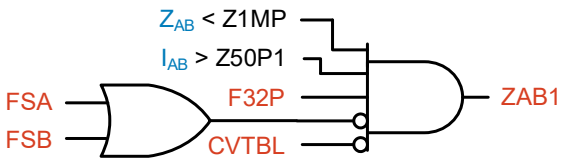

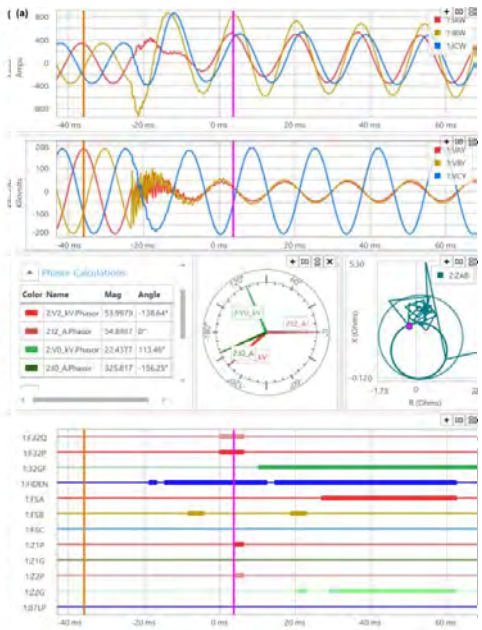

Issue 4 – Phase Zone 2 dependability

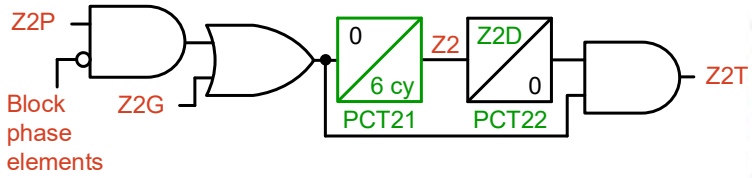

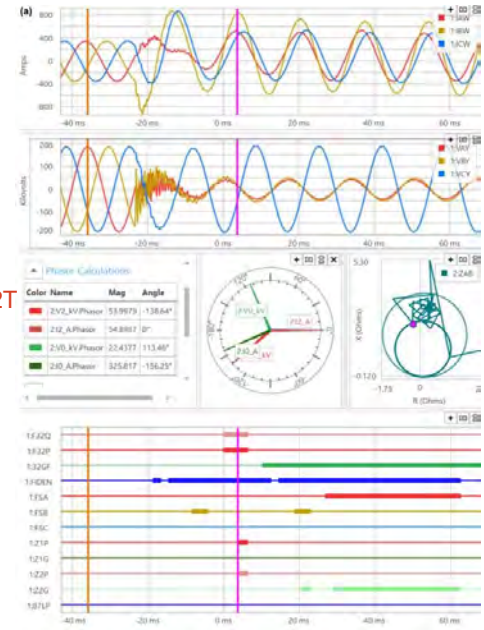

Settings summary

Setting	Old	New
ORDER	‘Q, V’	‘Q, V’
50FP	0.50 A	2.04 A
50RP	0.25 A	1.63 A
EWFC	‘N’	‘Y’
PSV50	NA	F32P AND (NOT F32Q) AND (LI1FIM < 1.96)
21P Zone 1 output	Z1P	Z1P AND (NOT PSV50)
Z50P1	0.50 A	3.92 A
CVTBL	‘N’	‘Y’ (if Active CVT)
PCT21DO	NA	6 cycles
PCT21IN (Zone pickup)	NA	Z2G OR (Z2P AND NOT PSV50)

Type 4 Wind ABG fault

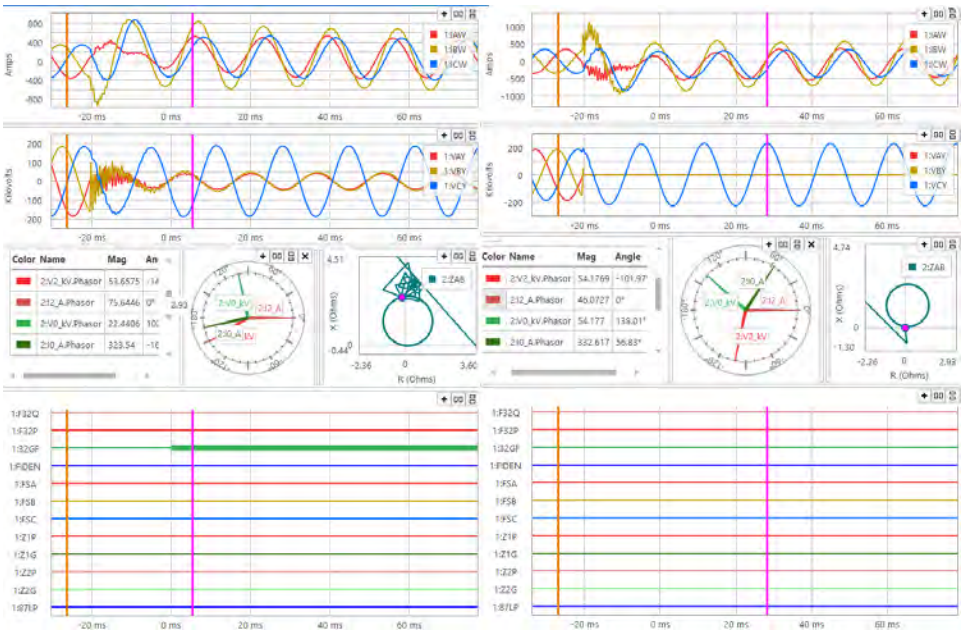

Type 3 Wind ABG fault

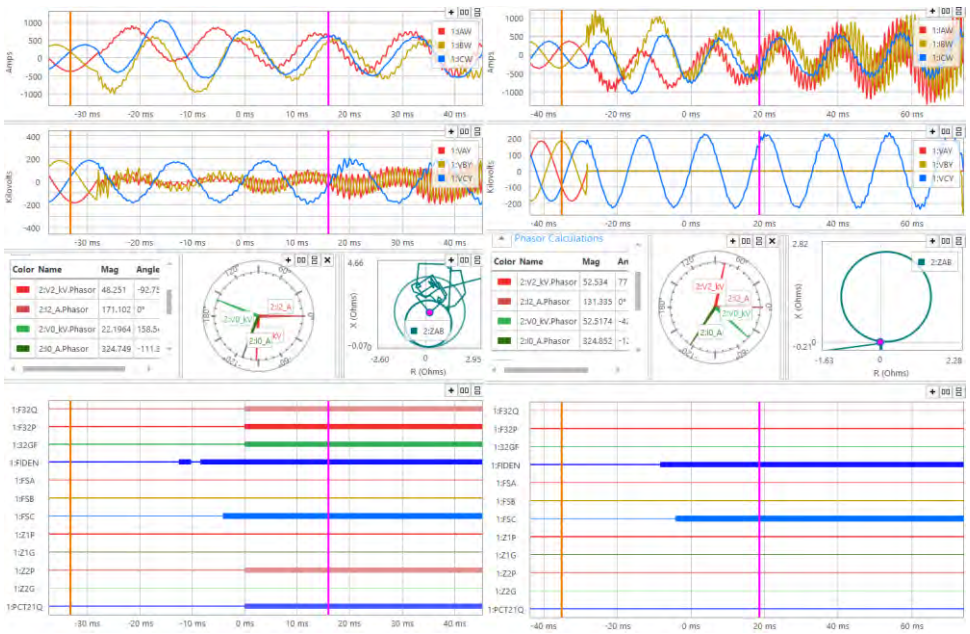

Performance overview

Weak terminal relay

Location	32	FIDS	21Z1	21Z2	87L
A	100%	100%	100%	100%	100%
B	100%	100%	100%	100%	100%
C	100%	100%	100%	100%	100%
D	68%	87%	89%	56%	100%
E	100%	100%	100%	100%	100%
F	100%	100%	100%	100%	100%
G	68%	87%	89%	56%	100%

Enhanced weak terminal relay

Location	32	FIDS	21Z1	21Z2	87L
A	100%	100%	100%	100%	100%
B	100%	100%	100%	100%	100%
C	100%	100%	100%	100%	100%
D	56%	100%	100%	38%	100%
E	100%	100%	100%	100%	100%
F	100%	100%	100%	100%	100%
G	56%	100%	100%	100%	100%

Strong terminal relay

A	100%	100%	100%	100%	100%
B	100%	100%	100%	100%	100%
C	100%	100%	100%	100%	100%
D	100%	100%	100%	100%	100%
E	100%	100%	100%	100%	100%
F	100%	100%	100%	100%	100%
G	68%	87%	75%	75%	100%

Enhanced strong terminal relay

A	100%	100%	100%	100%	100%
B	100%	100%	100%	100%	100%
C	100%	100%	100%	100%	100%
D	100%	100%	100%	100%	100%
E	100%	100%	100%	100%	100%
F	100%	100%	100%	100%	100%
G	100%	100%	100%	100%	100%

Conclusion

- 87L is an excellent scheme but requires backup
- IBR controls may result in low fault-current levels, which may be incoherent with voltages; modify settings for
  - Improved 32Q and FIDS security and dependability
  - Three-phase directional element security
  - Zone 1 security using fault detectors
  - Zone 1 security using CVT transient blocking logic
  - Zone 2 dependability using dropout timer

Questions?

Paper reference:
Part I: Problems - https://ieeexplore.ieee.org/document/9180079
Part II: Solutions - https://ieeexplore.ieee.org/document/9233925