Transmission Line Protection for Systems With Inverter-Based Resources

Ritwik Chowdhury and Normann Fischer, *Schweitzer Engineering Laboratories, Inc.*

***Abstract*—Inverter-based resources (IBRs) respond differently than synchronous generation sources during power system faults, challenging line protection reliability. This paper is an extension of another paper that presents the problems faced by line protection schemes. This paper provides solutions that can be applied in systems with IBRs to gain a substantial improvement in reliability.**

I. Introduction

Reference [1] presents problems encountered by transmission line protection schemes in systems with inverter-based resources (IBRs). The problems were based on a study led by Sandia National Laboratories. There was collaboration from four IBR manufacturers (OEMs) who provided "real-code" black-box electromagnetic transient (EMT) models comprising a mix of Type 3 Wind, Type 4 Wind, and Photovoltaic (PV) Solar. These models represent actual firmware deployed in the field wrapped in a PSCAD package so they can be used for EMT simulations, allowing creation of COMTRADE records. Two relay manufacturers then played back the COMTRADE records through their relay hardware.

This paper provides solutions to the problems presented in [1] via adjustment of relay settings already deployed in the field. Adjusting settings is significantly more economical than replacing relays or IBR technology. We show how existing line-protection elements can be set to provide a reasonable level of dependability while remaining secure in power systems with IBRs. The application guidance is general and independent of the IBR type or OEM.

II. Study System

As part of the study performed by the team led by Sandia National Laboratories and later enhancements, 208 cases were applied to the study system of Fig. 1 [1].

Table I
Locations and Contingencies of Power System Faults

Loc	Scenario and Contingency
A	Fault on TL13 near Bus 1, TL12 out of service
B	Fault on TL13 near Bus 3, no outages
C	Fault on TL23 near Bus 2, TL12 out of service
D	Fault on TL23 near Bus 2, TL13 out of service
E	Fault on TL4 near Bus 4, no outages
F	Fault on Bus 3, no outages
G	Fault on TL12 near Bus 2, TL13 out of service

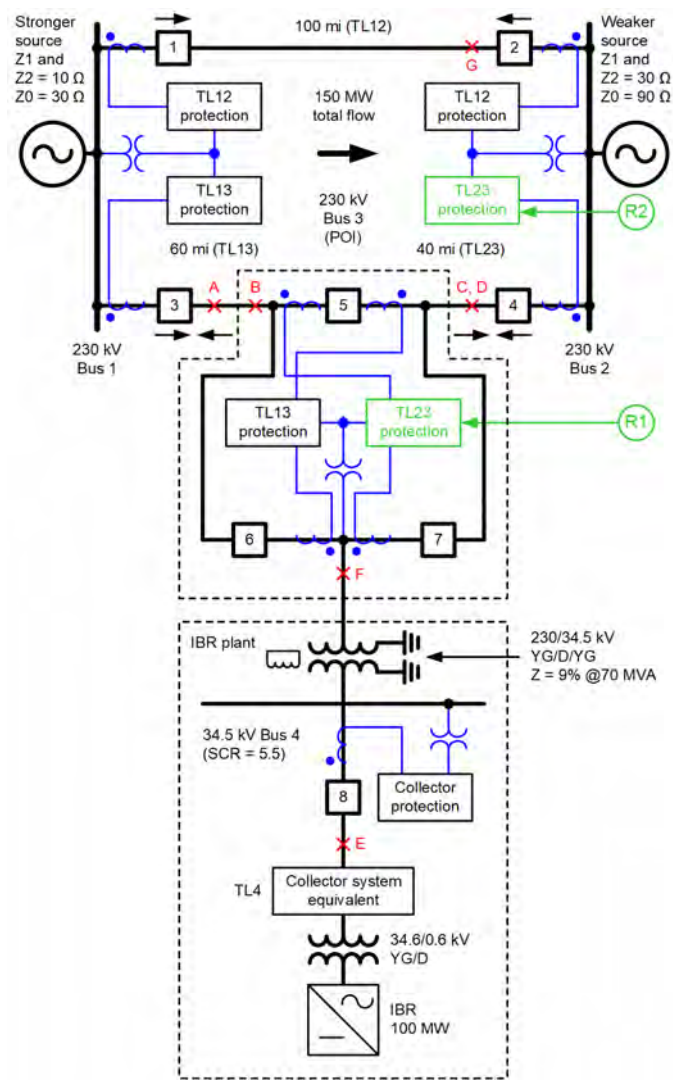

Fig. 1. Study system for analyzing performance in systems with IBRs

The fault cases consisted of the following mix:

- Four IBR OEMs:
  - OEM1 Type 4 Wind
  - OEM2 Type 4 Wind
  - OEM3 Type 3 Wind
  - OEM4 PV Solar
- Four fault types: AG, ABG, AB, ABCG
- Two fault resistances (RF): 0 Ω and 5 Ω
- Seven locations and contingencies, shown in Table I

III. Line Protection for Systems With IBRs

A. Application Guidance for Systems With IBRs

Reference [1] shows how currents from an IBR in a radial configuration can challenge conventional line protection. Inverters are designed to be current-limited devices to protect their power electronics switches from thermal damage, and they typically limit maximum injected current (I_{MAX}) between 1.10 to 1.30 pu of their rated current. I_{MAX} (in secondary amperes) is calculated using (1), where S_{IBR} is the rated MVA and V_{HV} is the transmission voltage level.

$$I_{MAX} = 1.30 \cdot \frac{S_{IBR}}{\sqrt{3} \cdot V_{HV} \cdot CTR} \quad (1)$$

I_{MAX} is used in (2) as the basis to increase the forward overcurrent threshold (50FP) to improve negative-sequence directional element (32Q) security [1]. For reference, in a conventional system, a metallic AB fault with 1 pu fault current at no load results in $3I_1$ and $3I_2$ values of 1.73 pu each. We use the observation that some IBRs lower $3I_2$ to not exceed the dc bus capacitor ratings. For instance, the Type 4 Wind plant (Fig. 15 of [1]) injects a $3I_2$ value of 0.50 pu (of I_{MAX}) that is not coherent with V2 (Fig. 14 of [1]). If a full converter-interfaced (but still current-limited) IBR provides the same I_2 as a conventional system, it would inject up to 1.73 pu. Increasing 50FP to 1.73 pu would remove dependability for internal line-to-line (LL) or line-to-line-to-ground (LLG) faults, even when the IBR behaves the same as a conventional source. In (2), we use 1.25 pu, which is biased towards security, but not all the way up to 1.73 pu. This provides dependability for LL and LLG faults when the source produces enough I_2 coherent with the voltages, such as Type 3 Wind (Fig. 16 of [1]), which produces 1.67 pu. Increasing 50FP reduces the sensitivity of the directional element, which is evaluated in the Appendix and is considered adequate (~100 Ω) for most applications.

The reverse overcurrent threshold (50RP) is set lower than 50FP [1], using (3) to ensure coordination security for some communications-assisted tripping schemes.

$$50FP = 1.25 \text{ pu} \cdot I_{MAX} \quad (2)$$

$$50RP = 1.00 \text{ pu} \cdot I_{MAX} \quad (3)$$

When the IBR is radially connected, the voltages of the faulted phases drop significantly and can be used as a better indicator of the fault type, as is apparent in Fig. 15 through Fig. 20 of [1]. Increasing the overcurrent thresholds using (2) and (3) also biases the fault-type identification and selection (FIDS logic in Fig. 11 of [1]) to use the weak-infeed undervoltage algorithm instead of the sequence angle comparison algorithm for ground faults.

While the above modifications are expected to address the security of the directional element for unbalanced faults, Fig. 18 of [1] shows that for 3P faults there may be a loss of directional security as well. We enhance the phase directional element output (F32P) and supervise all the phase elements with the logic in Fig. 2. The logic only blocks the phase elements if there is a three-phase fault (F32P and not F32Q [1]). It also checks that I_1 is less than the IBR current limit.

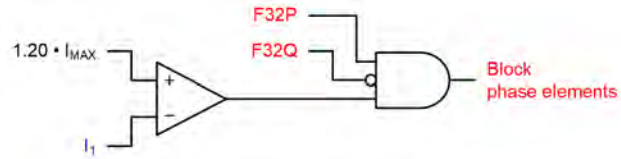

Fig. 2. Logic to enhance directional element security for three-phase faults

21P Zone 1 may overreach due to an oscillating impedance calculation, as observed in Fig. 15 and Fig. 16 of [1]. The maximum phase-to-phase current is observed when the faulted currents are 180 degrees (out of phase) with one another. To prevent overreach, we limit 21P Zone 1 using the phase fault detector Z50P1 in (4) [1]. Another option to prevent a Zone 1 overreach would be to use a pickup time delay; this penalizes Zone 1 speed in applications where the parallel line (TL13 in Fig. 1) is in service. Combining the two options using an OR gate is an excellent, general solution when considering step-distance coordination but is not evaluated here for simplicity.

$$Z50P1 = 2 \cdot (1.20 \text{ pu} \cdot I_{MAX}) \quad (4)$$

The transients resulting from capacitive voltage transformers (CVTs) may cause Zone 1 to overreach, as shown in Fig. 20 in [1]. CVT transient blocking logic suggested by the manufacturer (Fig. 3 of [1]) is used to address this issue.

Zone 2 may drop out intermittently, as observed in Fig. 15 and Fig. 16 of [1]. Hence, we add a 6-cycle dropout delay using the logic in Fig. 3 to ensure it provides dependable backup. Note that the Fig. 2 blocking logic also applies to 21P Zone 2.

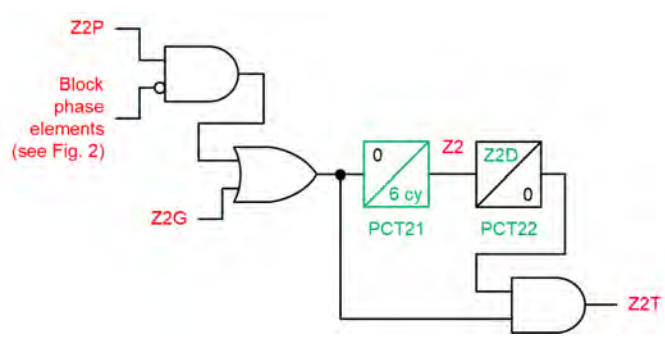

Fig. 3. Logic to enhance Zone 2 reliability

B. Settings Implementation Summary

For our system, S_{IBR} is 100 MVA, V_{HV} is 230 kV, and CTR is 200. We apply (2) to obtain I_{MAX}, as shown in (5).

$$I_{MAX} = 1.30 \cdot \frac{100E6}{\sqrt{3} \cdot 230E3 \cdot 200} = 1.63 \text{ A} \quad (5)$$

A summary of all settings changes is shown in Table II. PSV50 is the variable implementing the logic in Fig. 2, and PCT21IN and PCT21DO are the inputs and dropout values, respectively, of the PCT21 timer in Fig. 3. LI1FIM is I_1 in secondary amperes. Following best practices, these settings are applied to relays at both line terminals. This ensures that the relays use identical operating principles and remain secure for an external fault when both relays measure the same current. These settings are applied irrespective of OEM or IBR type. While these settings are not applicable to all field-deployed relays, the basic principles comprise the use of overcurrent supervision, logic, and timers, which are commonly available in microprocessor relays. For instance, instead of using 50FP/50RP to supervise the directional element, some relays have exclusive zero-sequence (50GFP/50GRP) and negative-sequence directional overcurrent (50QFP/50QRP) supervision. In such cases, only 50QFP/50QRP must be increased, so there is negligible impact on ground fault protection sensitivity.

The ORDER setting may be Q, V, or both, depending on application and protection philosophy. We use a combination in Table II to demonstrate protection performance.

TABLE II
SETTINGS FOR SYSTEMS WITH IBRS

Setting	Old	New
ORDER	'Q, V'	'Q, V'
50FP	0.50 A	2.04 A
50RP	0.25 A	1.63 A
EWFC	'N'	'Y'
PSV50	NA	F32P AND (NOT F32Q) AND (LI1FIM < 1.96)
21P Zone 1 Output	Z1P	Z1P AND (NOT PSV50)
Z50P1	0.50 A	3.92 A
CVTBL	'N'	'Y' (if Active CVT)
PCT21DO	NA	6 cycles
PCT21IN (Zone 2 Pickup)	NA	Z2G OR (Z2P AND NOT PSV50)

C. Study Results Using IBR Application Guidance

1) Type 4 Wind (OEM1 and OEM2)

The elements remained secure for the external ABG fault of Fig. 15 of [1], replayed in Fig. 4. The 32V element at R1 declared forward correctly. For an ABG fault at the remote bus, we expect F32Q and Z2P to assert. However, due to the low magnitude and unpredictable behavior of I_2 injected by the IBR, the 32Q element was not enabled due to the increased 50FP threshold in (3). The result is that the correct directionality from 32V was used by 32G, unlike what we observed in Fig. 15 of [1].

2) Type 3 Wind (OEM3)

For the ABG fault on Type 3 Wind, shown in Fig. 16 of [1] and replayed in Fig. 5, the elements behaved more dependably than Type 4 Wind due to the higher I_2 injected by the IBR. The 32Q element declared the correct direction and consequently provided a permissive (via F32P) to the phase elements. Fault identification behaved reliably, not asserting FSA or FSB, and ensuring the AG or BG loops did not overreach.

Both the directional and FIDS logic permitted Zone 2 to pick up. The dropout timer ensured that Zone 2 (PCT21Q) continued to time dependably.

For the three-phase (3P) fault in Fig. 6, the enhanced directional element, (shown in Fig. 2), prevents Z2P on R2 from converting to a PCT21Q for the reverse fault. Since there is insufficient current, R1 also biases towards security.

For the LG fault, the relay behavior in Fig. 19 of [1] using conventional settings was appropriate. The enhanced settings in Section III activated different mechanisms in the relay (Fig. 7) to arrive at the same correct protection conclusions.

From Fig. 7, we see that I_2 was 90 A primary ($3I_2$ = 1.35 A secondary), less than 50P of 1.63 A; the relay automatically falls back to using 32V ($3I_0$ = 6.5 A secondary) to determine fault direction. FIDEN is not enabled and the relay instead uses phase undervoltage to declare FSA, permitting 21G to run. The distance element behaves the same as Fig. 19 of [1].

1) PV Solar (OEM4)

We tested ideal voltage transformers (VTs) and CVTs with active and passive ferroresonance suppression circuits (FSC) using the models described in the Appendix of [1]. PV Solar demonstrated Zone 1 overreach for a fault at Location G when using CVTs with an active FSC [1].

In Fig. 8, use of the manufacturer-recommended CVT transient blocking logic (CVTBL in Fig. 3 of [1]) prevents Zone 1 from overreaching. As is evident in Fig. 8, Zone 2 is not blocked from CVT transients, but since it is an overreaching zone, there is no issue.

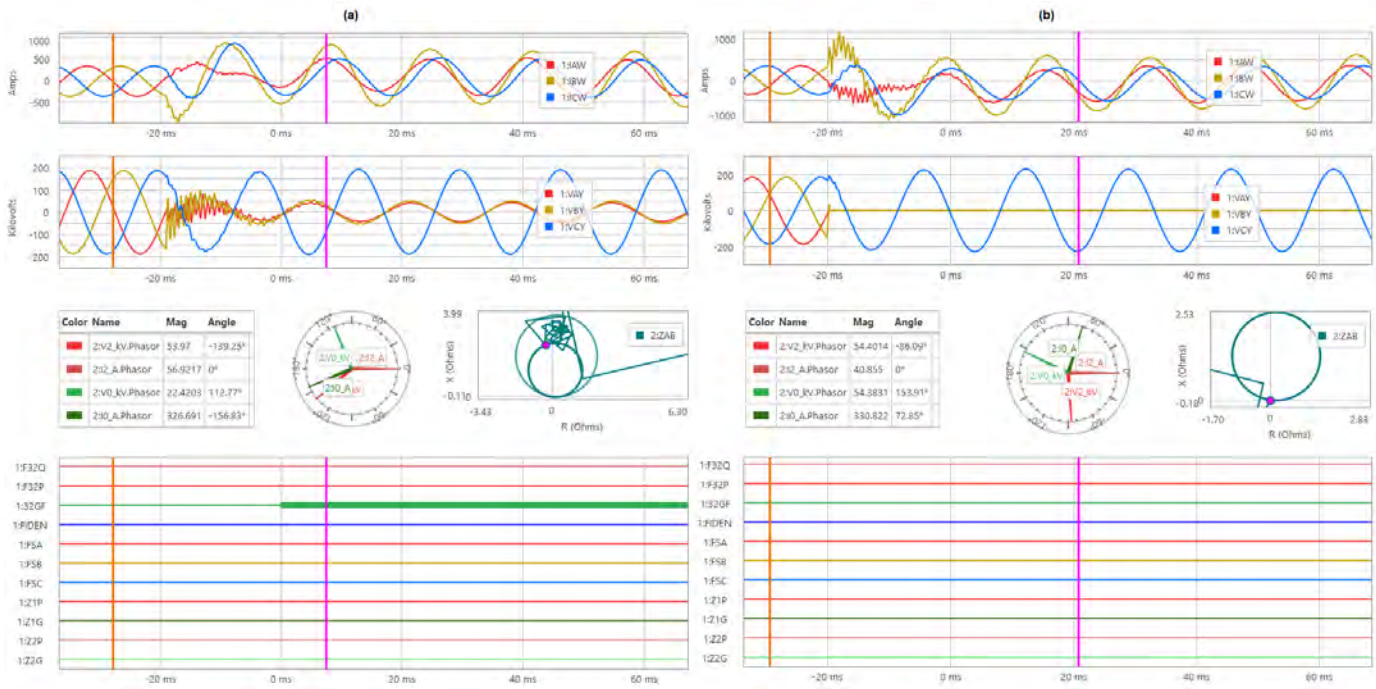

Fig. 4. Type 4 Wind external ABG fault at Location G as observed by (a) Relay R1 and (b) Relay R2 (cf. Fig. 15 of [1])

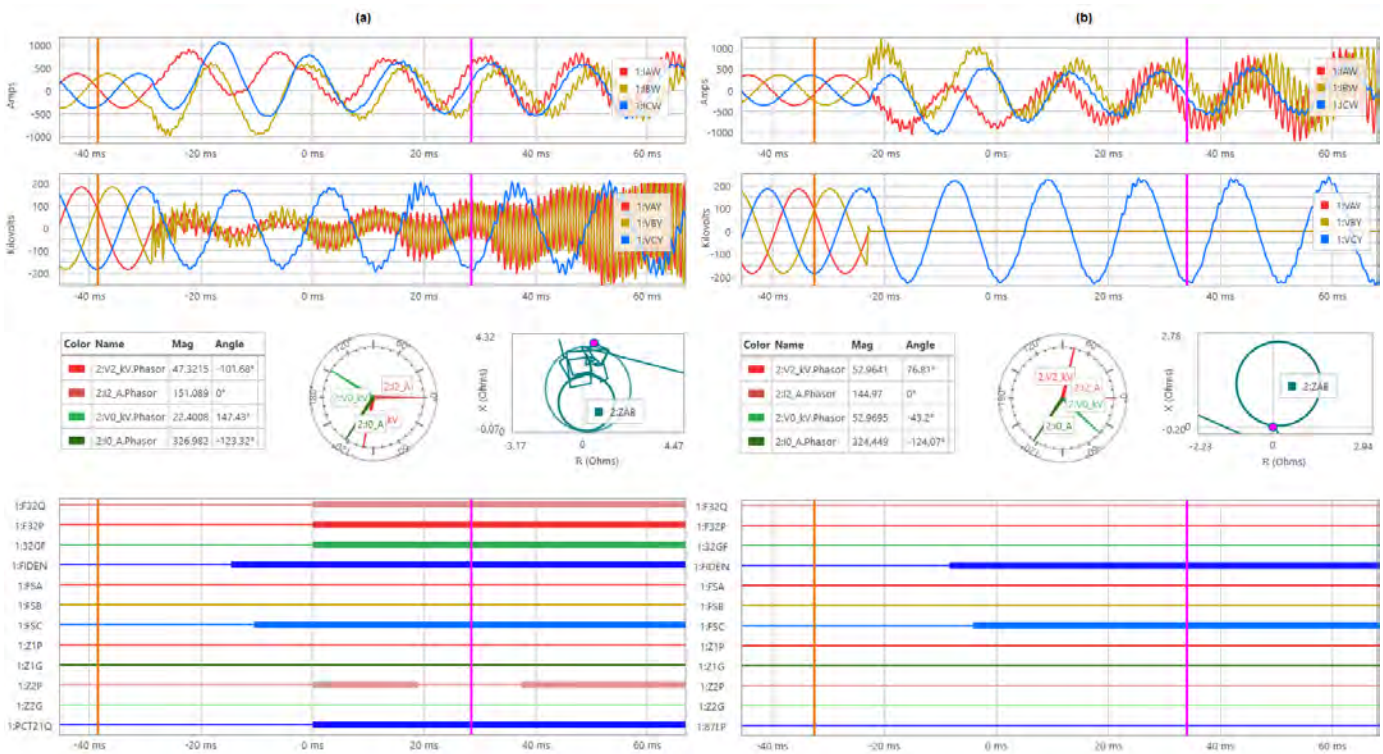

Fig. 5. Type 3 Wind external ABG fault at Location G as observed by (a) Relay R1 and (b) Relay R2 (cf. Fig. 16 of [1])

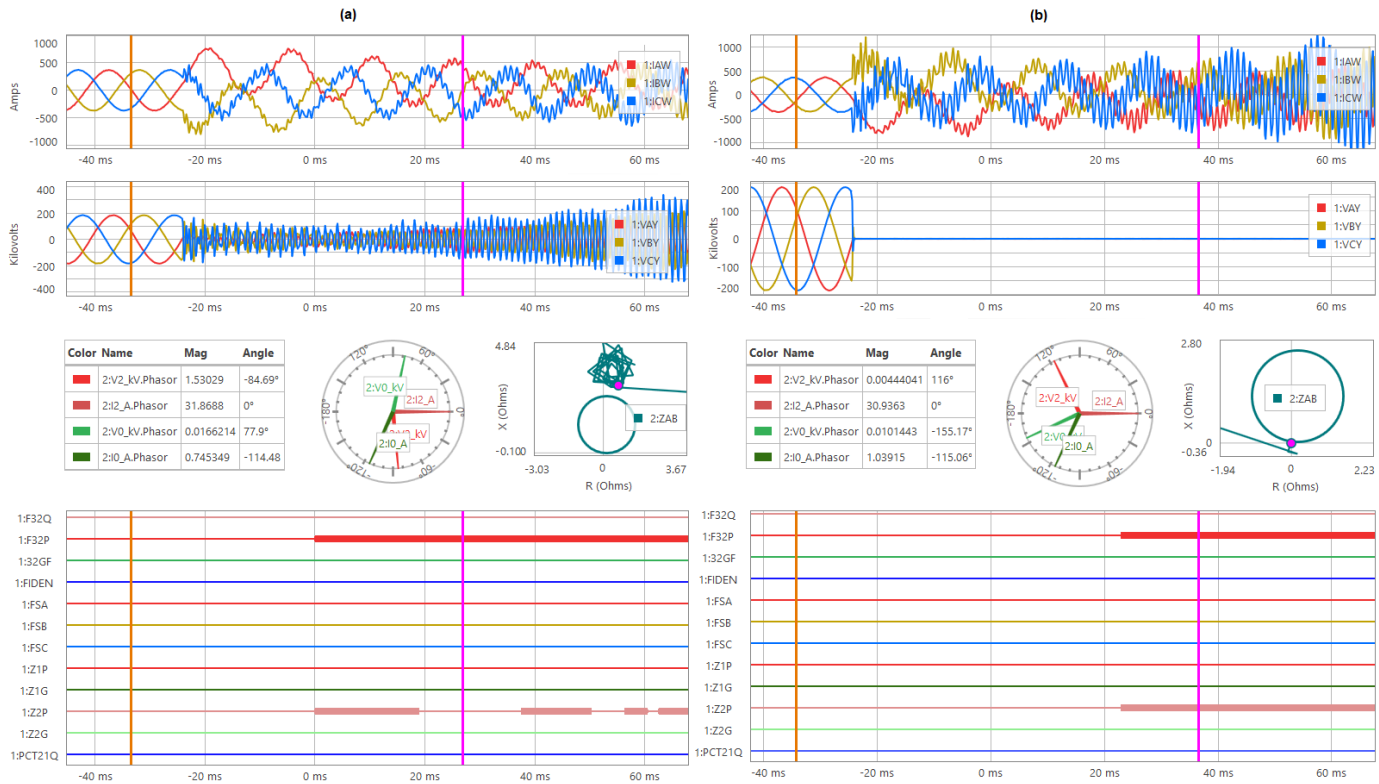

Fig. 6. Type 3 Wind external 3P fault at Location G as observed by (a) Relay R1 and (b) Relay R2 (cf. Fig. 18 of [1])

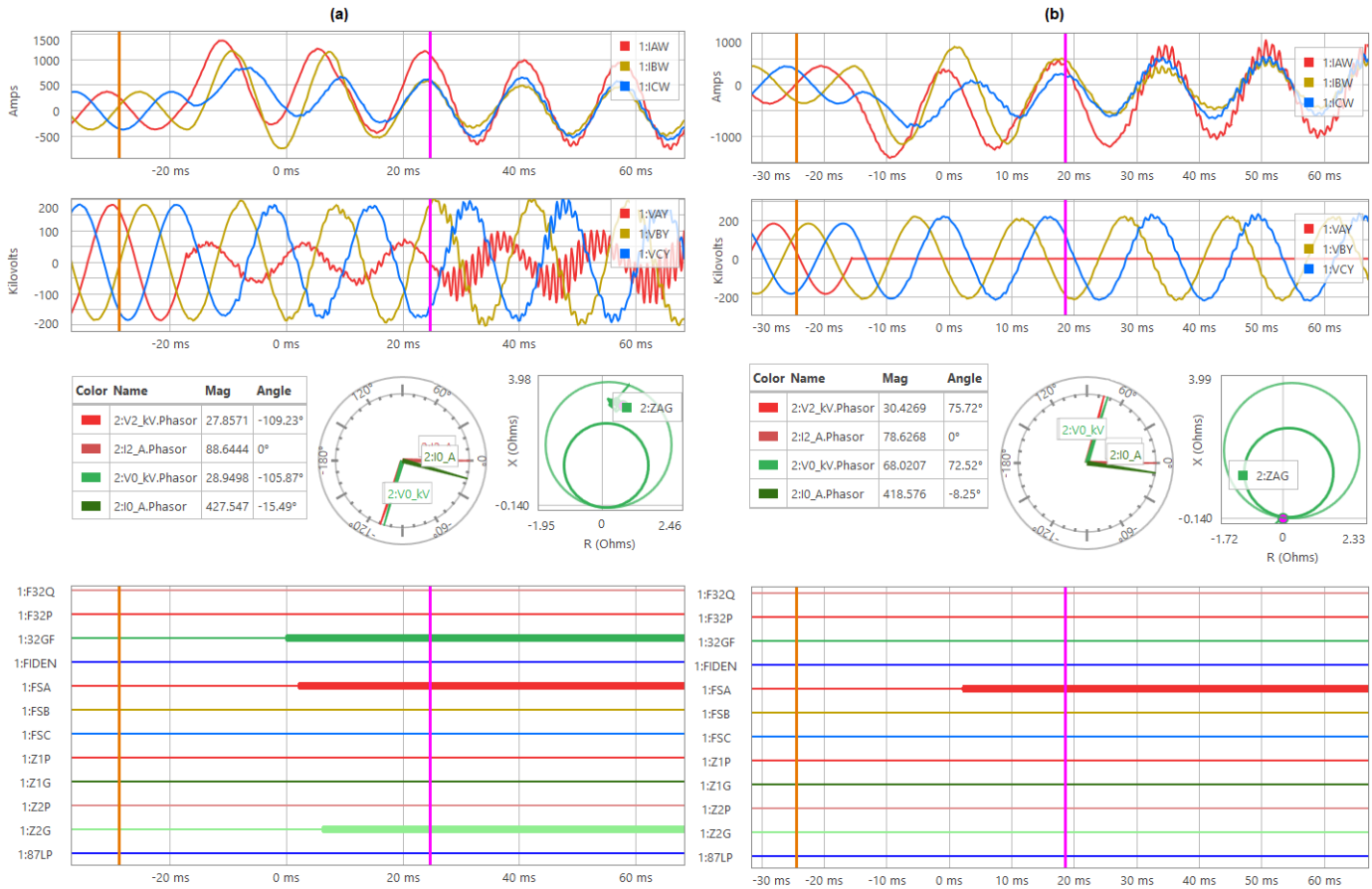

Fig. 7. Type 3 Wind external AG fault at Location G as observed by (a) Relay R1 and (b) Relay R2 (cf. Fig. 19 of [1])

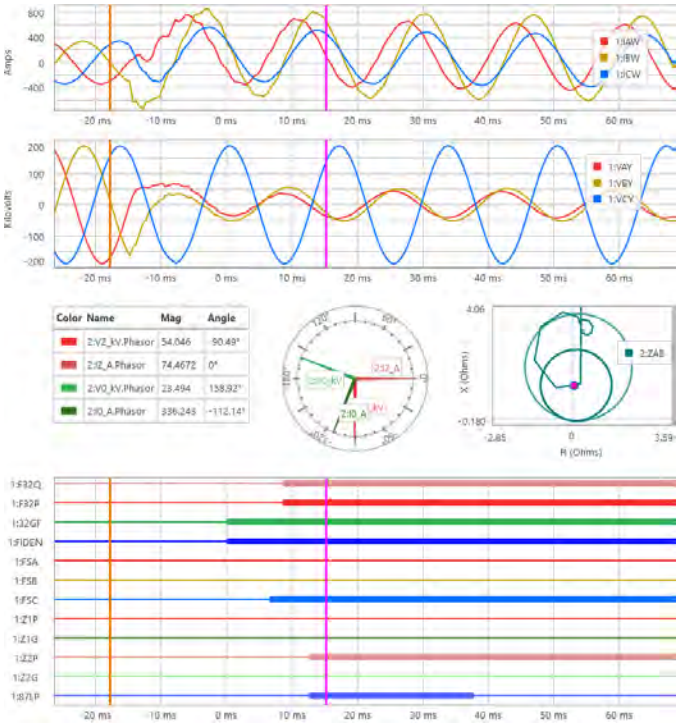

Fig. 8. PV Solar ABG fault at Location G as observed by Relay R1 (c.f. Fig. 20 of [1])

D. Summary

The overall enhanced protection element performance is shown in Table III and Table IV. Security is the paramount property of a protective relay, and there are no misoperations, unlike in Table II and Table III of [1]. If the response from the IBR is poor, then it does not satisfy the overcurrent pickup thresholds, and the schemes remain secure. Distance Zone 1 and FIDS performed securely and dependably. While Distance Zone 2 dependability decreased overall, there were cases (e.g., Fig. 5) that showed improvements, considering Zone 2 did not dropout, despite the oscillating apparent impedance; this allows it to be used dependably for step-distance backup.

Recently, the zero-sequence directional element (forced by setting ORDER = 'V' without 'Q') has become popular in IBR applications due to 32Q misbehavior. However, it is worth noting that the phase directional element (32P) in Fig. 8 of [1] does not consider the ORDER setting. Without the security enhancements in Section III.A, 32P may still misoperate for a reverse LL or LLG fault (e.g., Fig. 15 of [1]) due to unpredictable I_2 behavior from the IBR.

The basic operating principle used in this section is to use overcurrent supervision as an indication that the IBR is radial and to enhance the directional, fault-type selection and distance elements when there is a possibility of misbehavior.

For an external fault, when the IBR is radially connected, relays at both terminals remain secure. For an internal LG fault, relays at both terminals remain dependable due to availability of ample I_0 (Fig. 7). For LL or LLG faults, relays at both terminals remain dependable if the IBR produces enough I_2 (Fig. 5). For an internal 3P fault, the strong terminal remains dependable.

When the IBR is not radial (and the parallel line is in service), relays at both line terminals perform similarly to how they would in conventional systems with reduced sensitivity. The theory is consistent with an application engineer's intuitive understanding that if an IBR is small, existing protection will not notice its contribution and remain reliable. These principles can also be applied to improve collector feeder protection.

TABLE III
ENHANCED PERFORMANCE OF RELAY R1

Loc	32	FIDS	21Z1	21Z2	87L
A	100%	100%	100%	100%	100%
B	100%	100%	100%	100%	100%
C	100%	100%	100%	100%	100%
D	56%	100%	100%	38%	100%
E	100%	100%	100%	100%	100%
F	100%	100%	100%	100%	100%
G	56%	100%	100%	100%	100%

TABLE IV
ENHANCED PERFORMANCE OF RELAY R2

Loc	32	FIDS	21Z1	21Z2	87L
A	100%	100%	100%	100%	100%
B	100%	100%	100%	100%	100%
C	100%	100%	100%	100%	100%
D	100%	100%	100%	100%	100%
E	100%	100%	100%	100%	100%
F	100%	100%	100%	100%	100%
G	100%	100%	100%	100%	100%

IV. APPLICATION CONSIDERATIONS

A. Systems With Multiple IBR Plants

For the study system in Fig. 1, we only had one IBR plant. As penetration of IBRs increases, systems may have multiple distributed plants, represented in Fig. 9. IBR1 and IBR2 are connected to Bus B and Bus C, whereas the smaller IBR3 is tapped from TLBC due to economic considerations. The current transformers have a ratio (CTR) of 600 (3000/5).

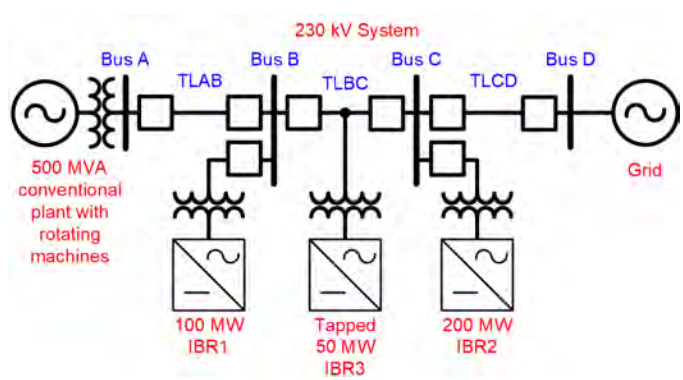

Fig. 9. System with multiple IBR plants

I_{MAX} for the protected lines is based on the maximum external fault current contributed by the different IBRs. For TLBC, the worst-case external fault is at Bus B, where the IBR2 and IBR3 currents flow through the line. Applying (6), relays protecting TLBC would measure a maximum current $I_{MAX\text{-}TLBC}$ from an IBR.

$$I_{MAX\text{-}TLBC} = 1.30 \bullet \frac{250E6}{\sqrt{3} \bullet 230E3 \bullet 600} = 1.36 \text{ A} \quad (6)$$

For TLAB or TLCD, all three IBRs can contribute to an external fault at Bus A or Bus D, respectively. Hence, $I_{MAX\text{-}TLAB}$ would be calculated using (7).

$$I_{MAX\text{-}TLAB} = 1.30 \bullet \frac{350E6}{\sqrt{3} \bullet 230E3 \bullet 600} = 1.90 \text{ A} \quad (7)$$

The relay settings all use this IMAX value with some security margin (e.g., 25 percent), as explained in Section III.A.

B. *Undervoltage Backup*

As shown in the secure application guidance in Section III.A, the relay at a radial, weak IBR terminal may not be dependable for an LL or LLG fault if there is a lack of I_2 and will be blind to an internal 3P fault. If there is no communications assistance from the remote strong terminal, then it is possible for the fault to remain uncleared from the IBR terminal. To address this, an undervoltage backup is provided [2] [3]. This backup requires coordination with the regulatory, regional, and interconnecting transmission utility requirements.

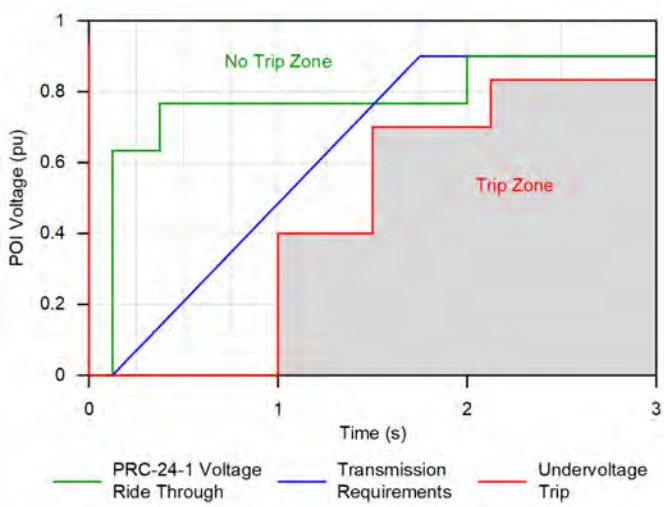

Fig. 10. Phase-to-phase undervoltage backup trip coordinated with regulatory and utility requirements [2] [3]

For instance, utilities under the NERC jurisdiction may comply with PRC-024-01 [4] and set their time-delayed (27D) undervoltage backup in a similar manner as a large Canadian utility [3], as shown in Fig. 10. Generally, from an IBR terminal when no communications assistance is available, we expect a local relay trip in 1.0 to 1.5 seconds since we expect a significant undervoltage from the weak terminal.

C. *Communications-Assisted Tripping Schemes*

Having fixed the core performance of the protection schemes for IBR applications, we recognize that the use of communications can enhance protection operating times, as with systems with conventional sources. As noted previously, 87L is not always an economical option, and for lines with tapped loads or resources (e.g., TLBC in Fig. 9), 87L may need to be desensitized or not applied at all.

We consider the performance of the application guidance in Section III.A, along with the undervoltage backup in Section IV.B. Without the use of communications assistance and all lines in service, we expect all faults to clear without intentional time delay for faults within Zone 1 reach (e.g., 70 to 80 percent) and with Z2D (e.g., 0.3 seconds) for the remaining 20 to 30 percent of faults.

If the IBR becomes radially connected to the remainder of the power system, we may expect the operating times in Table V (ignoring relay processing times) for R1 and R2 for different fault locations (m), defined as the per-unit distance from Bus 3. Note that "up to IBR" corresponds to the I_2 that may or may not be injected by the IBR. An IBR may inject I_2 due to standardized behavior [5], machine response (e.g., Type 3), or inadvertently due to imperfect control system response. The undervoltage backup delay (27D) is assumed to be slower than Zone 2 delay (Z2D).

TABLE V
EXPECTED PROTECTION OPERATING TIMES WITHOUT COMMUNICATIONS

Fault	m = 0 pu	m = 0.5 pu	m = 1 pu
LG R1	0 s	0 s	Z2D
LL/LLG R1	0 s or 27D (up to IBR)	0 s or 27D (up to IBR)	Z2D or 27D (up to IBR)
3P R1	27D	27D	27D
LG R2	Z2D	0 s	0 s
LL/LLG R2	Z2D	0 s	0 s
3P R2	Z2D	0 s	0 s

Communications assistance involves the use of schemes such as permissive overreaching transfer trip (POTT), directional comparison block (DCB), direct underreaching transfer trip (DUTT), etc. [3] [6] [7] [8]. For instance, enabling POTT allows use of weak-infeed trip schemes. Unless the relay sees a reverse fault, the weak terminal relay (R1) trips and echoes back the permission from the remote end to clear the fault. Use of communications allows relays at both line terminals to trip with the expected operating times, as shown in Table VI.

The operating times in Table VI are better than those in Table V, and we only observe delays in relay operating times for LL, LLG, and 3P faults near the weak terminal when the IBR is radially connected.

TABLE VI
EXPECTED PROTECTION OPERATING TIMES WITH COMMUNICATIONS

Fault	m = 0 pu	m = 0.5 pu	m = 1 pu
LG	0 s	0 s	0 s
LL/LLG	0 s or Z2D*	0 s	0 s
3P	0 s or Z2D*	0 s	0 s

* Depending on the IBR and communications scheme used.

If we consider a system that is much more dominant with IBR and both line terminals are weak, with communications in place, we may expect the operating times in Table VII. When tripping on undervoltage, the idea is that the voltages on the faulted line (and line terminals) is lower compared to the unfaulted lines. This principle works very well for systems where IBRs are radially connected to the protected line. However, for lines with IBRs on both terminals and a parallel line in service, relays for both lines measure the same voltages. If currents exhibit poor response and are not used, selectivity is not achieved. This challenge may be alleviated by standardizing fault currents injected by IBRs. Choosing the 1.25 pu secure threshold, instead of the higher 1.73 pu (Section III.A), facilitates fast fault clearing for LL and LLG faults.

TABLE VII
EXPECTED PROTECTION OPERATING TIMES
WITH COMMUNICATIONS FOR IBR-DOMINATED SYSTEMS

Fault	m = 0 pu	m = 0.5 pu	m = 1 pu
LG	0 s	0 s	0 s
LL/LLG	0 s or 27D*	0 s or 27D*	0 s or 27D*
3P	27D	27D	27D

* Depending on the IBR and communications scheme used.

D. *Parallel Lines With Zero-Sequence Mutual Coupling*

In some applications, a parallel line shares the same right of way (such as a tower). In such cases, there may be zero-sequence mutual coupling (Z_{0M}) between the parallel lines, as shown in Fig. 11. Elements that use zero-sequence quantities may face challenges and their performance requires reevaluation [7] [8].

One added benefit of the application guidance in Section III is that it shows that 32Q, which is immune to Z_{0M}, can be applied securely for proper directionality determination in systems with IBRs. 21G reach may still need to be adjusted based on conventional application guidance [7] [8].

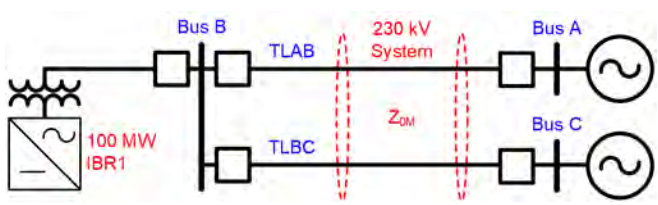

Fig. 11. Parallel lines with zero-sequence mutual coupling

V. CONCLUSION

87L is an excellent transmission line protection scheme for systems with IBRs but may not always have economical or application feasibility, and it requires backup.

The control scheme governing the behavior of IBRs generally have the objective of protecting the power electronic switches and the capacitor on the dc bus. For many present-generation IBRs, this typically manifests as low-magnitude currents that may behave poorly and incoherently with the voltages. This presents a reliability challenge to line-protection schemes when only the IBR current contribution to the fault is measured by the relay.

Existing protection schemes developed over several decades can be tuned and secured for systems with IBRs with reduced sensitivity, which may be reasonable in many applications. The challenges and solutions are as follows:

- The negative-sequence directional element and fault type identification may misbehave due to the currents injected by the IBR. Raising the supervisory overcurrent thresholds facilitates secure directional element performance. Combining it with weak-infeed control (which uses phase undervoltage information) enhances both security and dependability of fault type identification.
- The phase directional element may misbehave when a three-phase fault disconnects the IBR from the power system. Simple logic that uses positive-sequence current supervision improves security.
- Phase distance element Zone 1 may overreach due to an oscillating apparent impedance due to the currents injected by the IBR. Increasing the supervisory fault-detector levels improves security.
- Phase distance Zone 1 may overreach due to CVT transients. Using CVT transient blocking logic in the relay can prevent a misoperation.
- Phase distance element Zone 2 may drop out because of an oscillating apparent impedance due to the currents injected by the IBR. Use of a dropout timer allows Zone 2 to provide dependable backup.

There is an economical benefit as relays deployed in the field benefit from simple reliability enhancements via settings modifications. An undervoltage element provides delayed backup if the other schemes do not clear the fault.

As with conventional sources, the elements gain dependability from communications assistance. We consider how the standardization of IBR response benefits reliability in systems with higher penetration levels. We discuss application considerations for systems with multiple IBR plants. The guidance in this paper exhibits resilience in systems with zero sequence mutual coupling from a parallel line.

VI. Appendix: Effect of Directional Overcurrent Pickup Settings on Ground Fault Sensitivity

LG faults typically have higher fault resistance than other fault types since tower grounding resistance and soil resistivity increase the zero-sequence impedance of the return path. We consider the fault resistance coverage for the weak-terminal relay (R1) on our study system in Fig. 1. For an LG fault on the line at location (m) from Bus 3, Fig. 12 shows the approximate fault resistance coverage provided by the sequence directional elements in relay R1 as a function of the 50FP setting.

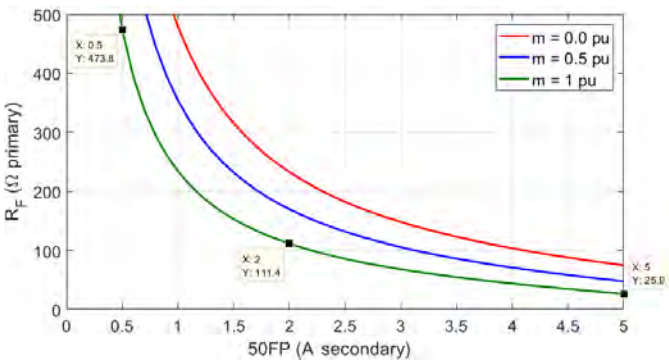

Fig. 12. Fault-resistance coverage vs. the 50FP setting for system in Fig. 1

When applying distance relays that are supervised by directional elements, we expect limitations because of the sensitivity of the distance relay characteristic. Due to the increased overcurrent thresholds from 0.5 A to ~2 A, the sensitivity of the sequence directional elements decreases from ~400 Ω to ~100 Ω. A 100 Ω coverage is adequate for most applications.

VII. Acknowledgements

The authors would like to thank Kasun Samarawickrama of Electranix for the PSCAD simulations used to test the relays.

VIII. References

[1] R. Chowdhury and N. Fischer, "Transmission Line Protection for Systems With Inverter-Based Resources – Part I: Problems," *IEEE Transactions on Power Delivery*, August 2020. Available: https://doi.org/10.1109/TPWRD.2020.3019990.

[2] M. Nagpal and C. Henville, "Impact of Power-Electronic Sources on Transmission Line Ground Fault Protection," *IEEE Transactions on Power Delivery*, Vol. 33, Issue 1, February 2018, pp. 62–70.

[3] M. Nagpal and C. Henville, "BC Hydro Protection Interconnection Practices for Sources with Inverter or Converter Interface," proceedings of the 45th Annual Western Protective Relay Conference, Spokane, WA, October 2018, pp. 17–18.

[4] NERC Reliability Standard PRC-024-1, Generator Frequency and Voltage Relay Settings, December 2012. Available: https://www.nerc.com/pa/Stand/Pages/PRC0241RI.aspx.

[5] VDE-AR-N 4130, "Technical Requirements for the Connection and Operation of Customer Installations to the Extra High Voltage Network (TAR Extra High Voltage)," November 2018. Available: https://www.vde-verlag.de/standards/0100494/vde-ar-n-4130-anwendungsregel-2018-11.html.

[6] R. Patterson, E. Price, and M. Sanders, "Directional Comparison Blocking System Fundamentals," proceedings of the 39th Annual Western Protective Relay Conference, Spokane, WA, October 2012, pp. 2–4.

[7] M. J. Thompson and D. L. Heidfeld, "Transmission Line Setting Calculations – Beyond the Cookbook," proceedings of the 41st Annual Western Protective Relay Conference, Spokane, WA, October 2014, pp. 8–13.

[8] C. Holt and M. J. Thompson, "Practical Considerations when Protecting Mutually Coupled Lines," proceedings of the 69th Annual Conference for Protective Relay Engineers, College Station, TX, April 2016, pp. 4–12.

IX. Biographies

Ritwik Chowdhury received his bachelor of engineering degree from the University of British Columbia and his master of engineering degree from the University of Toronto. He joined Schweitzer Engineering Laboratories, Inc. in 2012, where he has worked as an application engineer and is presently a senior engineer in the Research and Development division. Ritwik holds four patents and has authored over 15 technical papers in the area of power system protection and point-on-wave switching. He is a member of the main committee and a member of the rotating machinery, system protection and relaying practices subcommittees of the IEEE PSRC committee. He is a senior member of the IEEE and a registered professional engineer in the province of Ontario.

Normann Fischer received a Higher Diploma in Technology, with honors, from Technikon Witwatersrand, Johannesburg, South Africa, in 1988; a BSEE, with honors, from the University of Cape Town in 1993; an MSEE from the University of Idaho in 2005; and a PhD from the University of Idaho in 2014. He joined Eskom as a protection technician in 1984 and was a senior design engineer in the Eskom protection design department for three years. He then joined IST Energy as a senior design engineer in 1996. In 1999, Normann joined Schweitzer Engineering Laboratories, Inc., where he is currently a distinguished engineer in Research and Development. He was a registered professional engineer in South Africa and a member of the South African Institute of Electrical Engineers. He is currently a senior member of IEEE and a member of the American Society for Engineering Education (ASEE). Normann has authored over 60 technical and 10 transaction papers and holds over 20 patents related to electrical engineering and power system protection.

© 2021 by Schweitzer Engineering Laboratories, Inc.
All rights reserved.
20210127 • TP6968-01