74th Annual Conference for Protective Relay Engineers March 23, 2021

Achieving Reliable Generator 100% Stator Ground Fault Protection

Nader Safari-Shad and Russ Franklin

University of Wisconsin-Platteville & Alliant Energy Corporation

Outline

1) Reliable 100% stator ground protection in high-impedance grounded generators

2) Stator single-line to ground protection using IEEE recommended schemes

3) Field tests for setting IEEE recommended schemes

4) Case studies

5) Conclusion

Protective Element Reliability

- Dependability $\mathcal{D}$: assurance that the element **will** operate correctly in response to faults
- Security $\mathcal{S}$: assurance that the element **will not** operate incorrectly
- Reliability: $\mathcal{R} = \alpha\,\mathcal{D} + (1-\alpha)\mathcal{S}$ where $0 \leq \alpha \leq 1$ is a **tendency factor**.

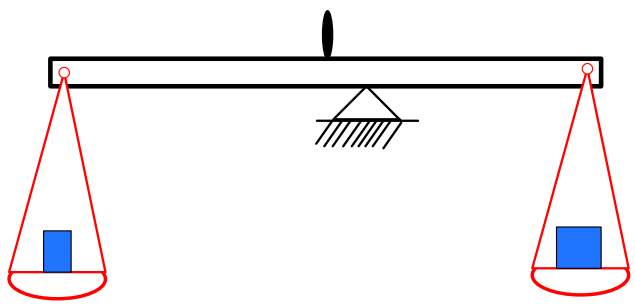

Alliant Energy Protection Philosophy for Units ≥ 10 MVA

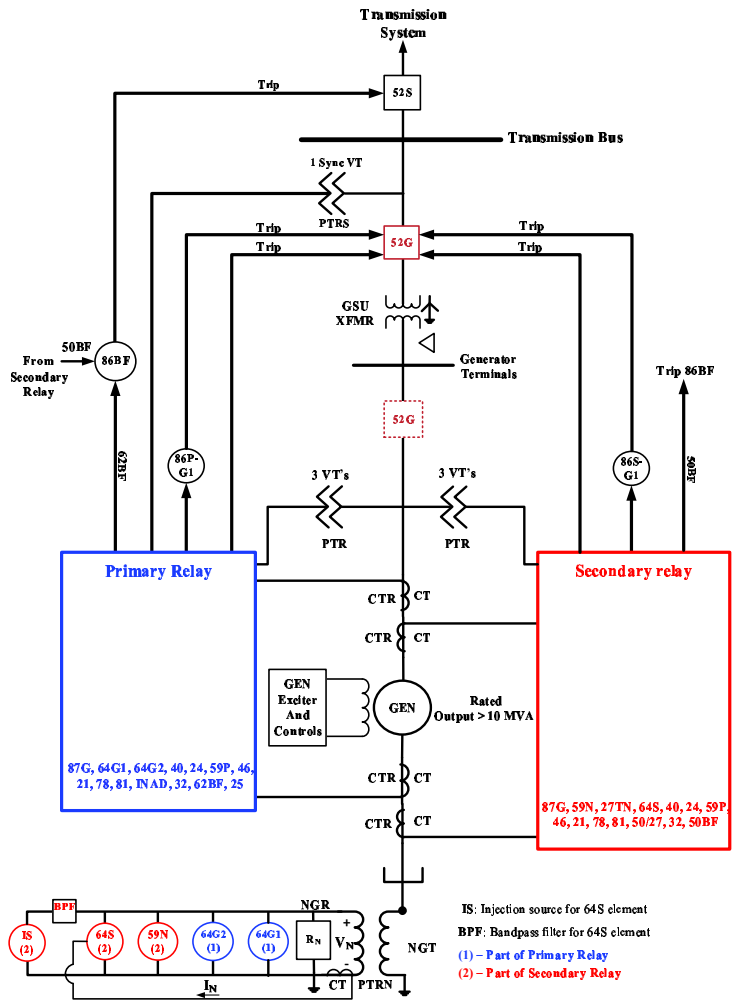

64G1/59N Protection Scheme in HIG Generators

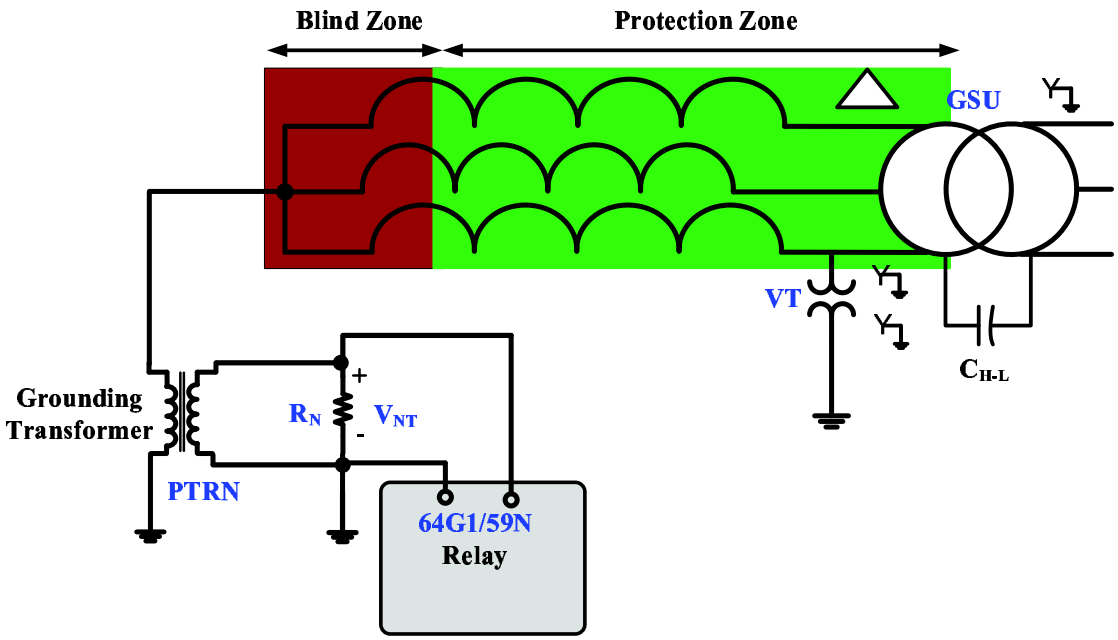

The **64G1/59N** scheme operates if

$$V_{N1} > \beta_1$$

where V_{N1} is the magnitude of the fundamental component (50 or 60 Hz) of the voltage across R_N and $\beta_1 > 0$ is a fixed pickup setting.

64G1/59N Protection Coverage

The pickup can be calculated without any generator voltage testing:

$$\beta_1 = \frac{(1 - \frac{\%\ \text{Coverage}}{100}) \times (\phi - \phi\,\text{kV} \times 1000)}{\sqrt{3} \times \text{PTRN}}$$

The element must be coordinated for system faults as well as VT secondary ground faults.

Generator Stator Protection Failures

Failing to achieve 100% protection coverage has proven to result in dire consequences (**C. V. Maughan**):

7-9. Failure-to-ground caused by the fracture of a stator conductor is not rare; examples are shown in these three photos. Core and winding damage attributed to a burned open bar in a slot is shown in the left and center photos and the burned-away copper of a fractured connection is at the right

Achieving 100% Stator Ground Fault Protection

If the generator produces more than 1% third-harmonic content, the conventional **third-harmonic voltage-based schemes 27TN** and **64G2/59THD** can be used to complement the **64G1/59N** scheme.

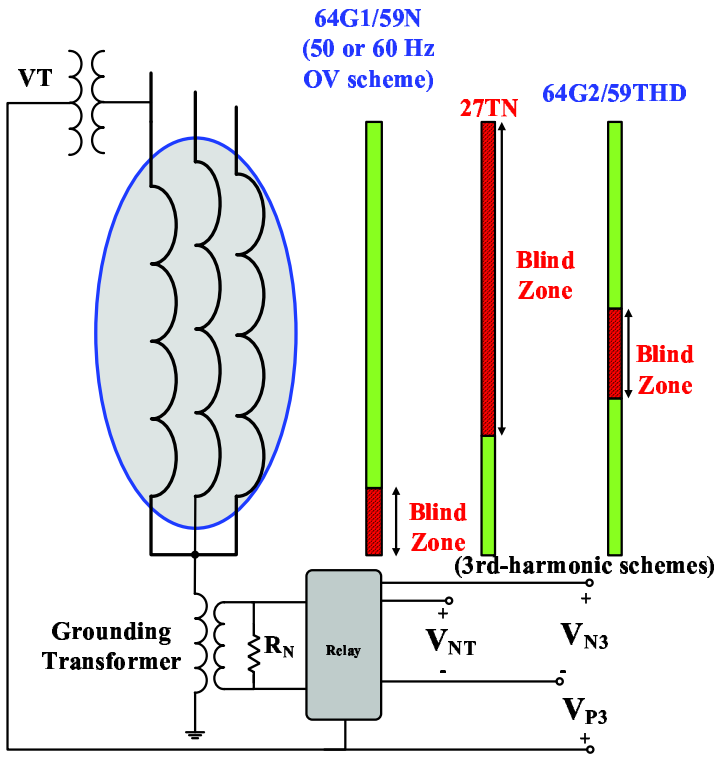

Third-harmonic Voltage Characteristics

Healthy Characteristics:

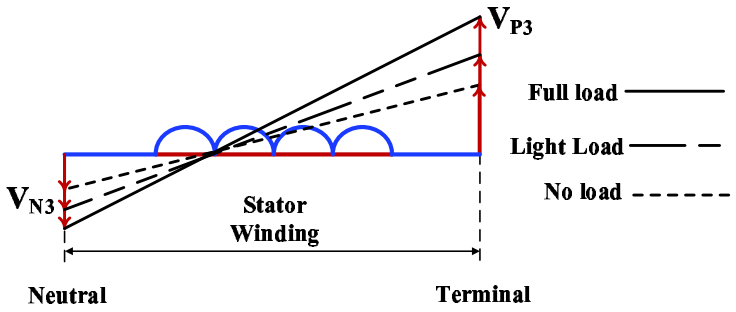

Faulty Characteristics:

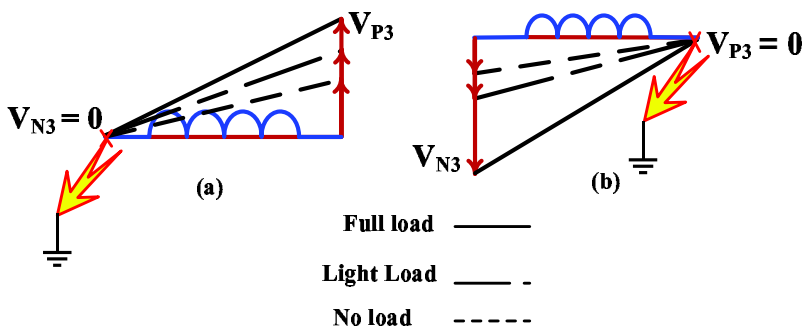

Third-harmonic Differential Voltage Scheme

The **64G2/59THD** scheme operates if

$$\Delta V_3 = |V_{N3} - \text{64RAT} \times V_{P3}| > \beta_3$$

where the **64RAT** setting is calculated using M data points obtained during field testing, i.e.,

$$\text{64RAT} = \left(\sum_{i=1}^{M} V_{P3}(i)\right)^{-1} \left(\sum_{i=1}^{M} V_{N3}(i)\right)$$

and $\beta_3 > 0$ is a fixed pickup setting. A lower bound on β_3 is calculated using

$$\beta_{3,min} = 1.1 \left(0.1 + \max_{1 \le i \le M} \{\Delta V_3(i)\}\right)$$

where

$$\Delta V_3(i) = |V_{N3}(i) - \text{64RAT} \times V_{P3}(i)|$$

Third-harmonic Undervoltage Scheme

The **27TN** scheme operates if

$$V_3 < \alpha_3$$

where

$$\alpha_3 = \frac{1}{2}\left(\min_{1 \le i \le M}\{V_{N3}(i)\}\right)$$

Caution: The lowest V_{N3} does not necessarily occur at the no-load operating point.

Field Data

Since third-harmonic voltages depend on generator loading, **64G2/59THD** and **27TN** schemes can be set **securely** only if comprehensive third-harmonic voltage testing is performed.

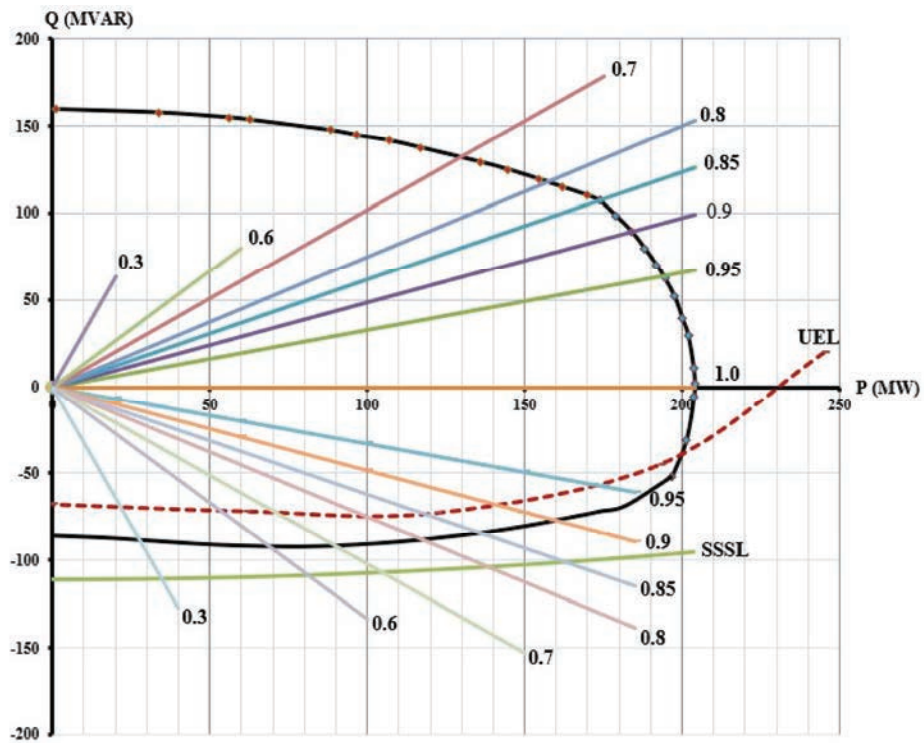

100% Subharmonic Injection Scheme

The overcurrent-based subharmonic injection element (**64S**), available in the secondary relay, protects the whole winding and extends into the iso-phase bus, GSU delta, auxiliary transformers, etc.

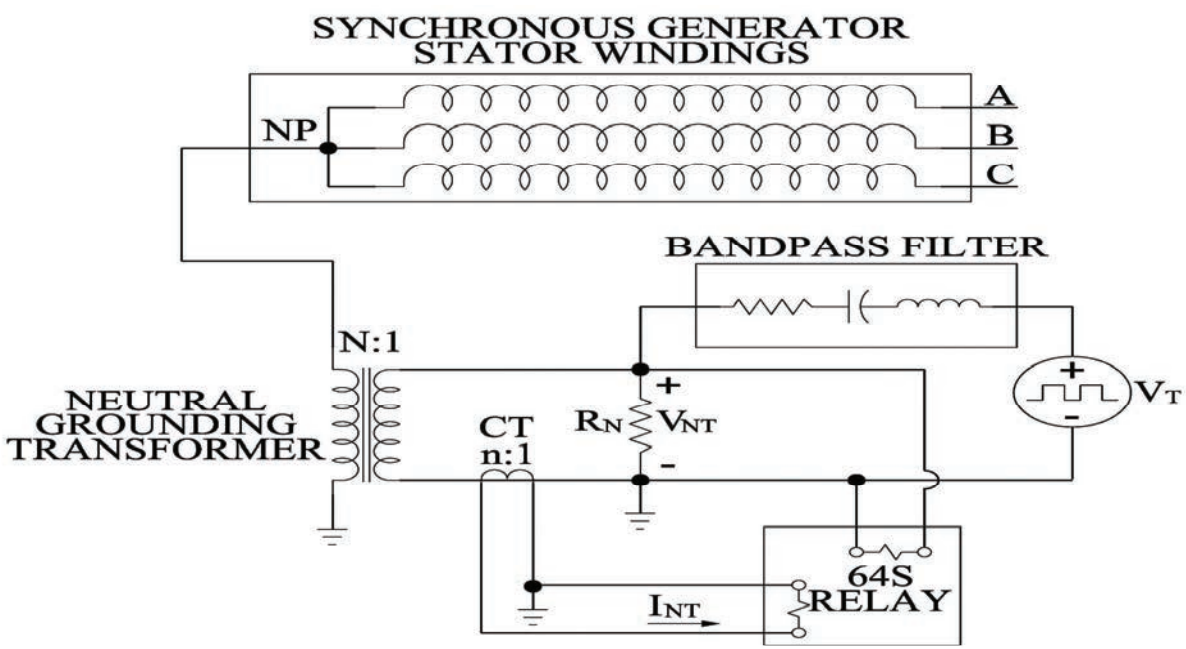

100% Subharmonic Injection Scheme Cont.

The **64S** scheme operates if the subharmonic neutral **current magnitude** is larger than a fixed pickup setting, i.e.,

$$|I_N(j\omega_0)| > \gamma_1$$

where γ_1 is a fixed pickup setting determined from the field and calculation data. Here, $\omega_0 = 2\pi f_0$ where f_0 is the **subharmonic injection frequency**.

Additionally, subharmonic **real-part of neutral current** can be used to gain sensitivity to high-resistance faults and/or cases where the total capacitance to ground of the generator stator windings is larger than $1.5\ \mu\ F$, i.e.,

$$\mathrm{Re}\left\{I_N(j\omega_0)\right\} > \gamma_2$$

Equivalent Circuit Model of the 64S Element

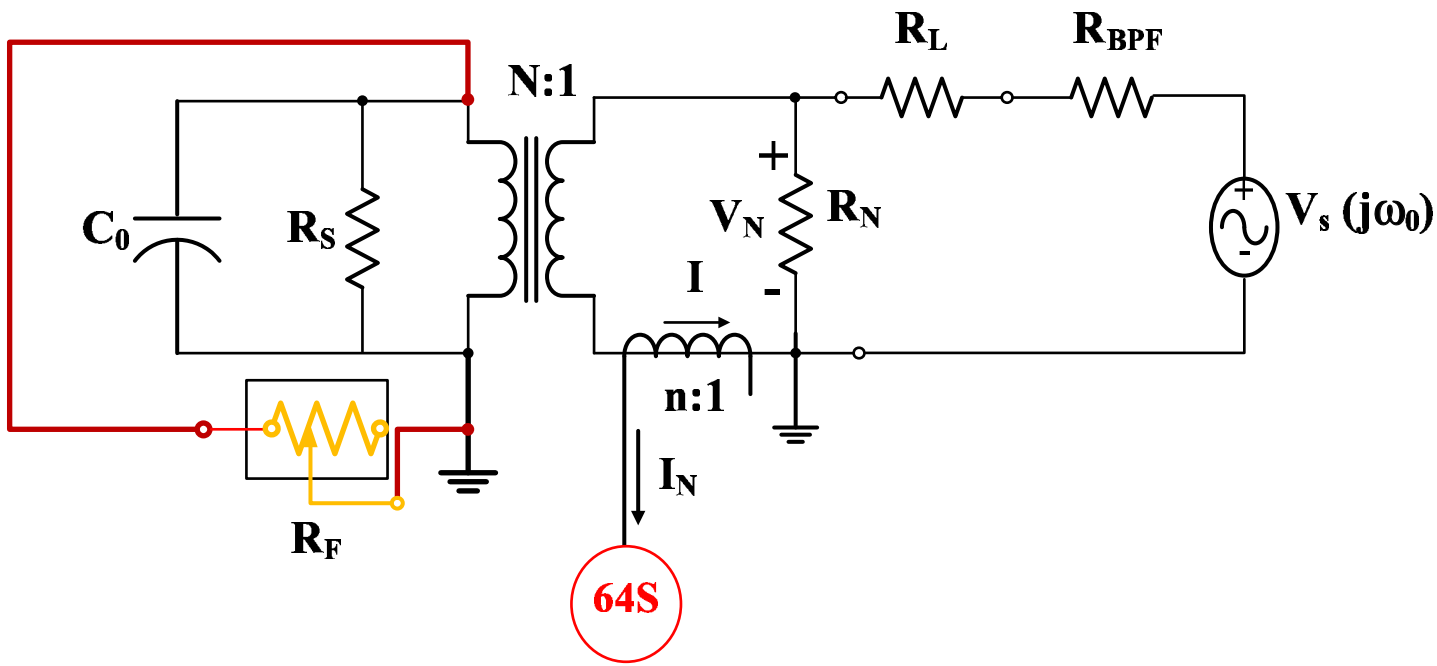

Equivalent circuit model allows deriving equations for $V_N(j\omega_0)$, $I_N(j\omega_0)$ and $\mathrm{Re}\,(I_N(j\omega_0))$ which can be used in calculating the required settings.

Case Studies: Relay Upgrade Project in 2019-2020

An Alliant Energy combined cycle power plant having one 301.2 MVA steam turbine generator (**ST13**) unit and two identical 204.0 MVA gas combustion turbine (**GT1** and **GT2**) units needed relay upgrade.

TABLE I
GENERATOR RATINGS AND AUXILIARY EQUIPMENT DATA

Unit	MW	MVAR	MVA	$\phi - \phi$ kV	PTR	PTRN
ST13	241.0	180.7	301.2	18	150	50
GT1 (GT2)	173.4	107.5	204.0	18	150	50

Steam Turbine Generator

64G1/59N Setting Calculation:

$$\beta_1 = \frac{(1 - \frac{95}{100}) \times (18\,\text{kV} \times 1000)}{\sqrt{3} \times 50} = 10.4\ sV$$

Steam Turbine Generator Cont.

64G2/59THD Setting Calculation: Based on the unit capability curve, **UEL**, **SSSL**, and plant normal **high maximum dispatch level** limits, **39** test points are specified.

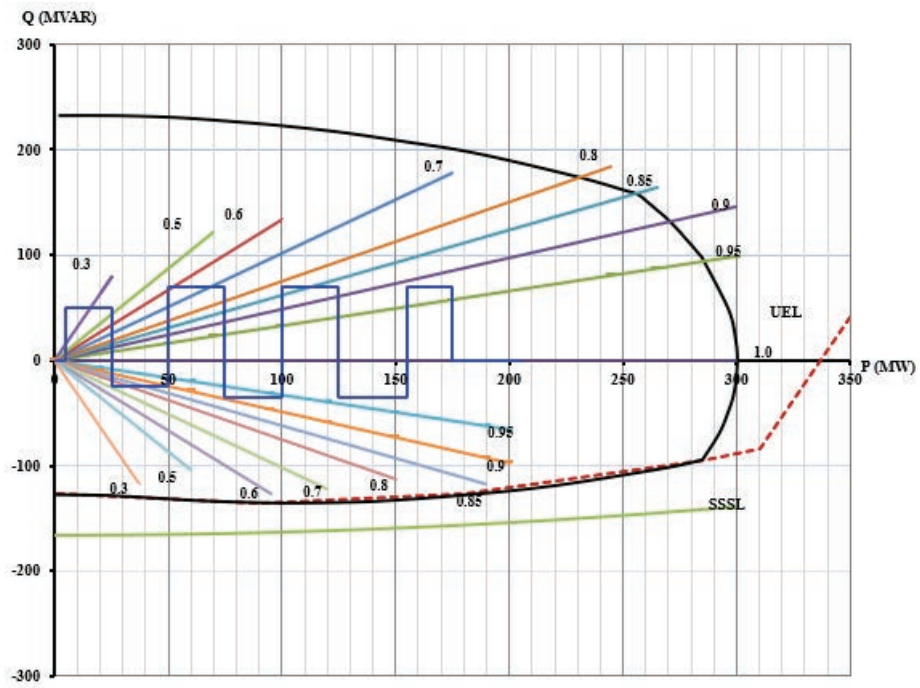

Due to slow transition between the designed operating points, **4193** data points are recorded.

64G2/59THD Calculation Results

TABLE II
64G2 SETTING'S CALCULATION

64RAT	1.0
$64G2P_{min}$	0.2
64G2P	0.3
64G2 minimum low-winding coverage	17.2%
64G2 upper-coverage boundary	32.8%
Minimum 64G1 and 64G2 overlap achieved	12.2%

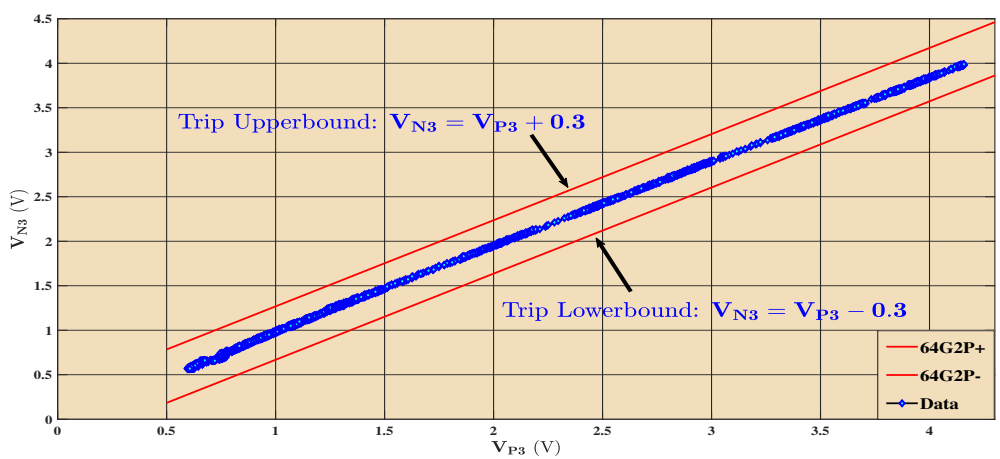

From the above graph, it appears that the selected pickup setting of **0.3** is **uniformly secure**.

64G2/59THD Security Analysis

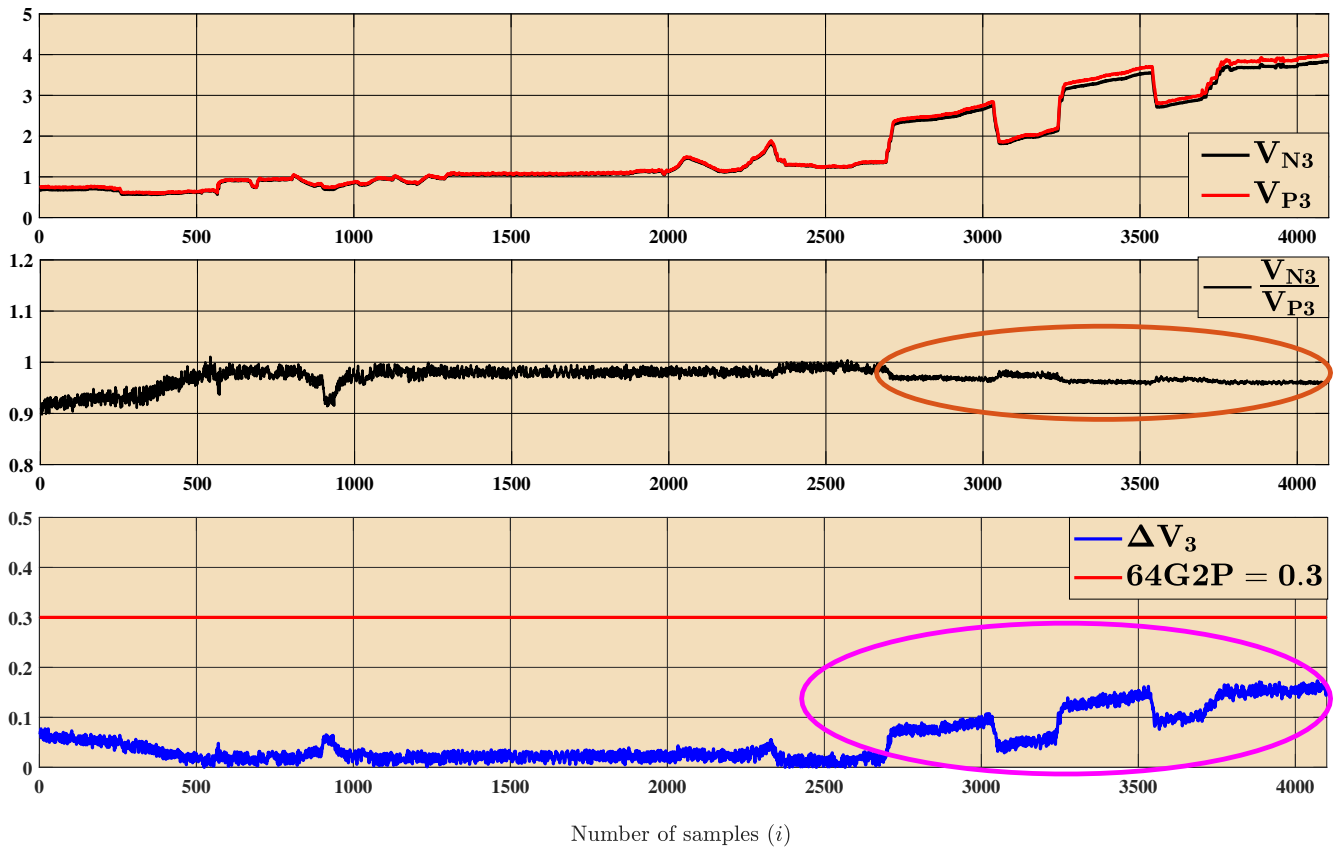

From this graph, it is evident that at the selected pickup setting of 0.3 is **not uniformly secure**.

100% Stator Ground Settings for ST13

Unfortunately, increasing the pickup setting to 0.4, reduces the minimum **64G1** and **64G2** overlap to 9.6% which is less than the 10% relay manufacturer recommendation.

Faced with this dilemma and past experience with misoperations of the **64G2/59THD** scheme, it is decided to set the **64G2** element as a **27TN** in both relays.

TABLE III
100% STATOR GROUND SETTINGS FOR ST13

Primary Relay	Secondary Relay
64G1P = 10.4 sV	59N Pickup = 10.4 sV
64RAT = 0 64G2P = 0.4 sV	27TN Pickup = 0.33 sV

Gas Combustion Turbine Generators (GT1/GT2)

64G1/59N Setting Calculation:

$$\beta_1 = \frac{(1 - \frac{95}{100}) \times (18\,\text{kV} \times 1000)}{\sqrt{3} \times 50} = 10.4\ sV$$

64G2/59THD Setting Calculation: Due to terminal VT's being Delta connected, **64G2/59THD** is not applicable.

To set the **64G2** as a **27TN** element in both relays, we still need to test both units.

GT1/GT2 Third-harmonic Voltage Testing

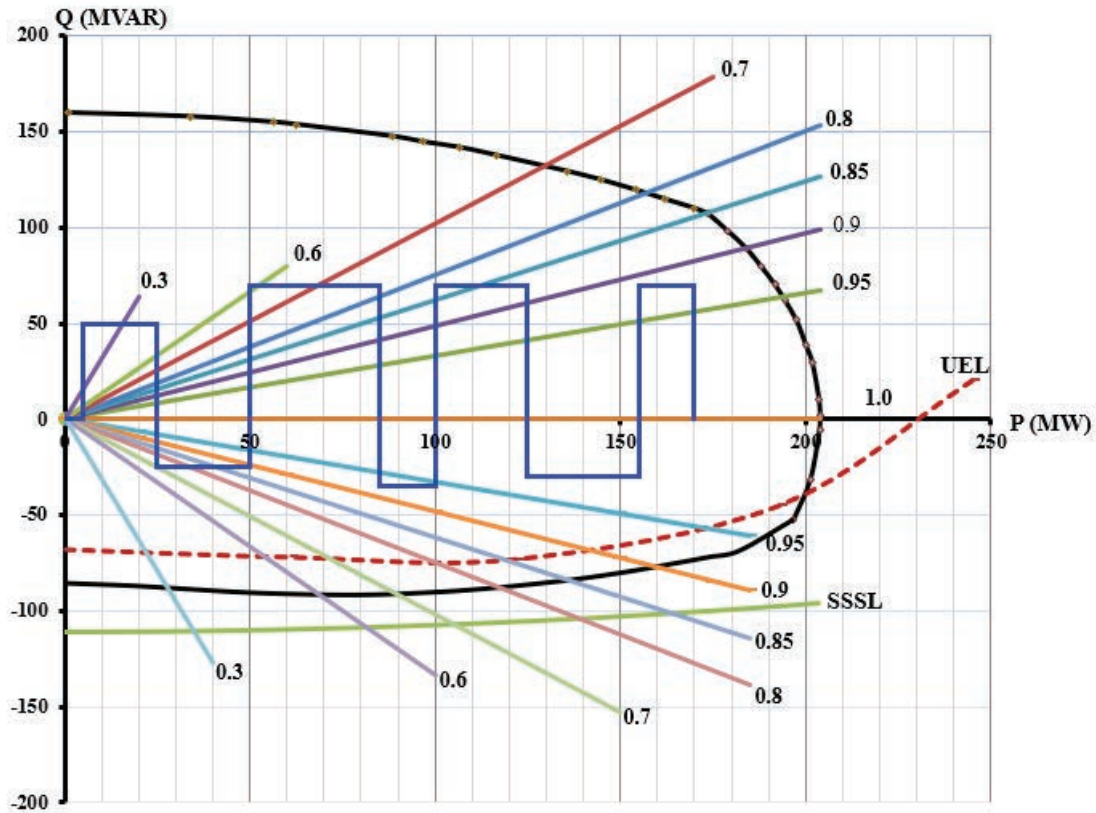

The lowest $V_{N3} = 0.180$ sV is measured at 49.6 MVA lead pf which does not allow for setting the elment securely!

Setting 64S in the Secondary Relay

Sample field data at light-load:

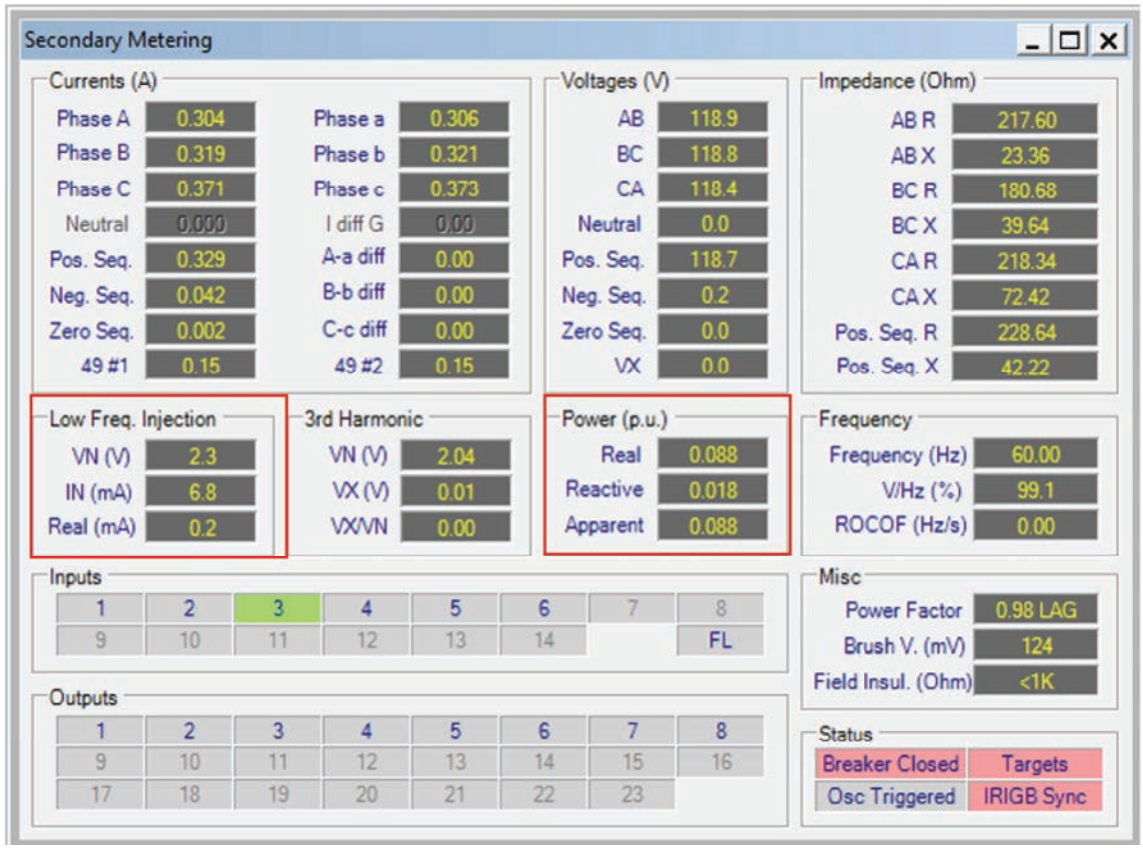

Field Measured and Calculated Data

TABLE V
64S ELEMENT EQUIVALENT CIRCUIT MODEL PARAMETERS

R_{BPF} (Ω)	R_L ($m\Omega$)	R_N (Ω)	C_0 (μF)	N	n
8	5	$(1+\delta_1)\,0.525$	$(1+\delta_2)\,0.8171$	50	78

Measured Data	$\lvert V_N \rvert$ (V)	$\lvert I_N \rvert$ (mA)	Re (I_N) (mA)
1. Unfaulted at stand-still	2.1	5.2	0.0
2. Unfaulted with exciter on	2.3	5.3	0.2
3. Unfaulted at light-load	2.3	6.8	0.2
4. Staged terminal solid ground fault at stand-still	0.9	33.8	32.9
5. Staged neutral solid ground fault at stand-still	0.9	34.4	33.7

Calculated Data	$\lvert V_N \rvert$ (V)	$\lvert I_N \rvert$ (mA)	Re (I_N) (mA)
6. Unfaulted with breaker open	2.0	6.6	0
7. Unfaulted with breaker closed	2.0	7.0	0
8. Ground fault with $R_F = 100\ k\Omega$ (low-side breaker open)	2.0	6.6	0.6
9. Ground fault with $R_F = 100\ k\Omega$ (low-side breaker closed)	2.0	6.9	0.6
10. Ground fault with $R_F = 50\ k\Omega$ (low-side breaker open)	2.0	6.6	1.3
11. Ground fault with $R_F = 50\ k\Omega$ (low-side breaker closed)	2.0	6.9	1.3
12. Ground fault with $R_F = 5\ k\Omega$ (low-side breaker open)	1.5	11.1	9.9
13. Ground fault with $R_F = 5\ k\Omega$ (low-side breaker closed)	1.5	11.2	9.9
14. Ground fault with $R_F = 1\ k\Omega$ (low-side breaker open)	0.8	25.5	25.4
15. Ground fault with $R_F = 1\ k\Omega$ (low-side breaker closed)	0.8	25.5	25.4
16. Ground fault with $R_F = 0\ k\Omega$ (low-side breaker open)	0	41.6	41.6
17. Ground fault with $R_F = 0\ k\Omega$ (low-side breaker closed)	0	41.6	41.6

64S Scheme Pickup

1. Criterion based on **subharmonic neutral current magnitude**:

$$\max\{\text{normal}\,|I_N|\} < \gamma_1 < \min\{\text{faulty}\,|I_N|\}$$

$$\gamma_1 = \frac{7.0 + 25.5}{2} = 16.3\,mA$$

2. Criterion based on **subharmonic neutral current real-part**:

$$\max\{\text{normal Re}\,(I_N)\} < \gamma_2 < \min\{\text{faulty Re}\,(I_N)\}$$

$$\gamma_2 = \frac{0.2 + 9.9}{2} = 5.1\,mA$$

100% Stator Ground Settings for GT1 (GT2)

TABLE VI
100% STATOR GROUND SETTINGS FOR GT1 (GT2)

Primary Relay	Secondary Relay
64G1P = 10.4 sV	59N Pickup = 10.4 sV
64G2 Disabled	64S $\lvert I_N \rvert$ Pickup = 16.3 mA 64S Re (I_N) Pickup = 5.1 mA

Conclusion

- Careful application of **IEEE recommended** stator ground fault detection schemes can lead to reliable protection;

- Obtaining **field data** and careful **data analysis** are the most important factors in achieving reliable protection.