RESTRICTED EARTH-FAULT (REF) PROTECTION CHALLENGES DUE TO EXTENSIVE USE OF CABLES

Zoran Gajić, Mike Kockott

HITACHI ABB POWER GRIDS

© Hitachi ABB Power Grids 2020. All rights reserved

Content

1. Understanding the basics about network grounding
2. Resistive grounding
3. Possible issues when power cables are extensively used in the network
4. Solutions
5. Conclusion

Why power system grounding is important?

Type of neutral point grounding of an electrical network determines:

1) Magnitude level of the earth-fault current at the fault point
2) Safety: Step and Touch voltages in vicinity of the fault point
3) Operation of the network during abnormal EF conditions which are the most common type of faults (e.g. influence continuity of supply)
4) Type of protective relays which shall be used
5) Overvoltage condition on healthy phases during the EF (transient and steady-state)
6) Design and price level of the installed equipment (e.g. insulation level).
7) Interference with other equipment (e.g. communication equipment)

Type of earthing used throughout the World

Different grounding principle

	isolated	compensated	low impedance	solid
	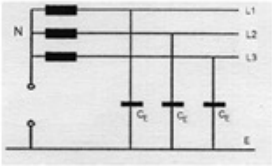	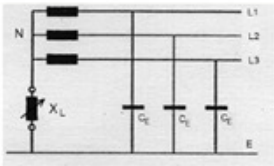	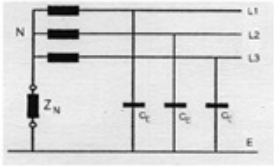	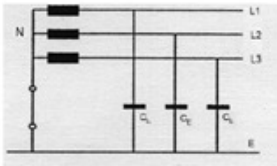
EF Current	I_C	**Theoretically 0A**	I_{lim}	I_{SC}
Voltage factor	$k = \sqrt{3}$	$k = \sqrt{3}$	$k \sim 1\text{-}1{,}4 / \sqrt{3}$	$k \sim 1\text{-}1{,}4$
EF Property	self extinction possible $I_{fault} < 35A$	self extinction possible $I_{fault} < 65A$	steady arc	steady arc
Customers	Uninterrupted power supply	Uninterrupted power supply	immediate interruption	immediate interruption
Application	limited to small networks with $I_C < 35A$	up to an I_C of a few 100 A $I_{fault} < 65A$ / up to **132** kV	Grounding via earthing resistance or earthing reactor	transmission systems solidly grounded

Low Impedance Grounding can be Tricky

Resistor Grounded Power Systems

Used terminology throughout the World:

1. Resistive grounding
2. Impedance grounded system
3. Io*cos(ϕ) current component

Very often a single neutral point resistor is used for the entire network (e.g. 300A resistor).

If several neutral point resistors are used in parallel, then the total GF current at the fault point would be equal the sum of all resistor currents.

Power system circuit

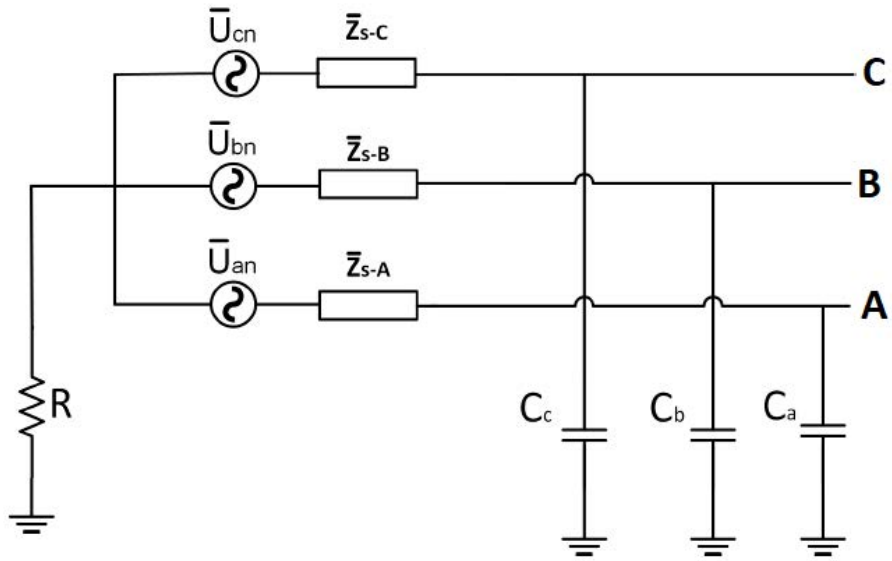

Resistor Grounded Power Systems

What happens during a Ground Fault?

Current at the fault point will have two components:

1. Resistive component (blue color)
2. Capacitive component (yellow & red colors)

Capacitive current component is typically ignored in traditional protection practices.

Power system circuit and relevant GF current paths

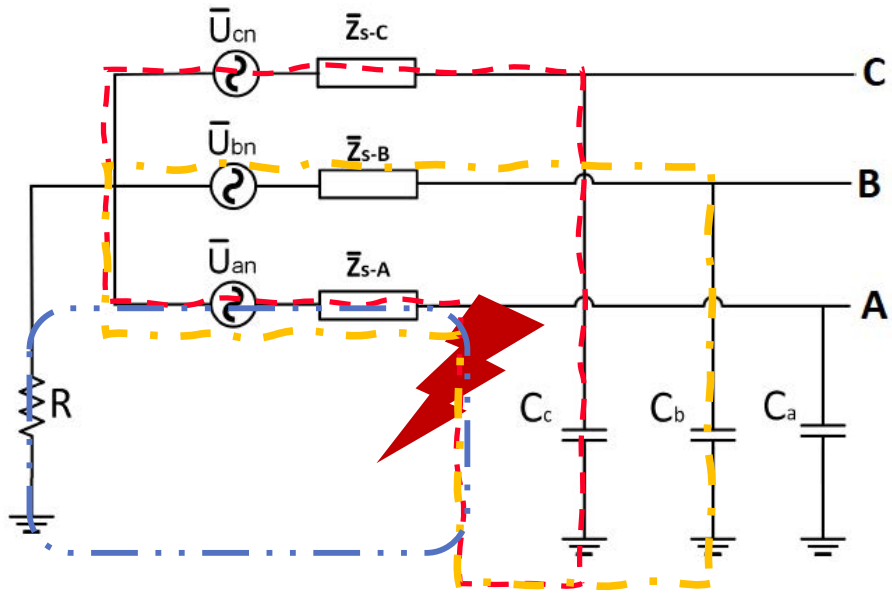

What is the Possible Problem?

Single Resistor used for Grounding

1) Many distribution networks around the world have limited earth-fault current by a resistor located in the MV winding neutral point of for example a 132/X kV infeed transformer.
2) MV voltage level (i.e. X kV) depends on a particular utility and country and can have different value. Some typical values are 6.3kV, 13.8kV, 20kV, 33kV and 35kV. Simplified single-line diagram of such distribution network and the relevant fault points for the MV side low-impedance restricted earth-fault protection function (i.e. REF) are shown in Figure
3) Internal earth-fault location (i.e. F1-int) and external earth-fault location (i.e. F2-ext) are also marked
4) IN_W2 is the neutral current
5) 3Io_W2 is residual current at the W2 HV side
6) What can happen in case when power cables are extensively used in network connected to W2?

Typical power system circuit for distribution network

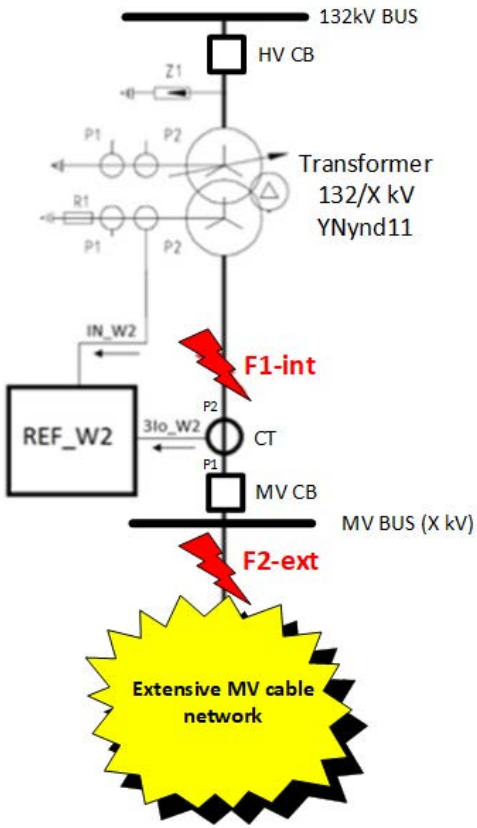

Low Impedance REF Directional Operating Characteristics used for W2

Low Impedance REF

1) The directional check is executed if:
   a) $3I_0$ (terminal side) is bigger than 3%

2) The trip condition is fulfilled if:
   a) both $3I_0$ an I_N are within the operating region

3) If the check is not executed (small 3Io currents) then:
   a) this check is not a condition for trip

4) Default ROA value is set to 60°

Expected for External Fault

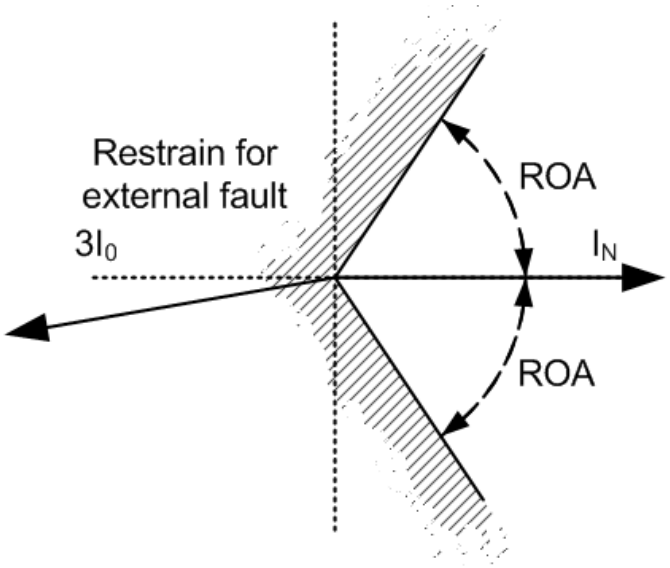

Expected for Internal Fault

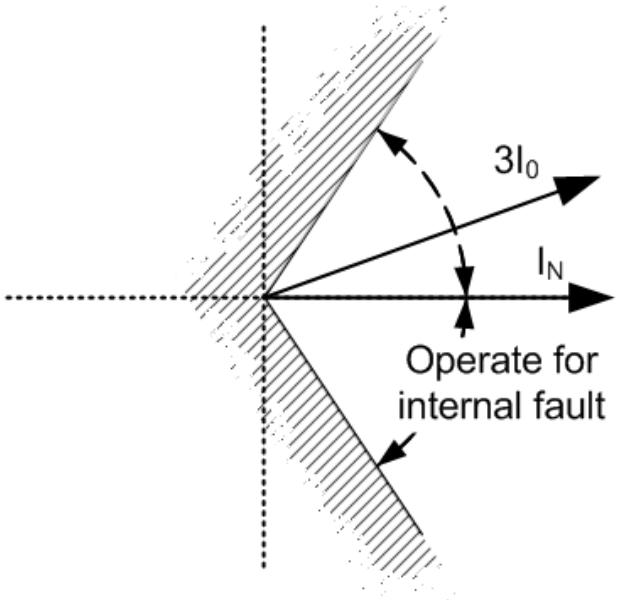

Field Example No 1: Current waveforms during Internal Ground Fault

W2 side is a 33kV winding grounded via a 1000A resistor. W2 CTR=2500/1; NP CTR=1600/1

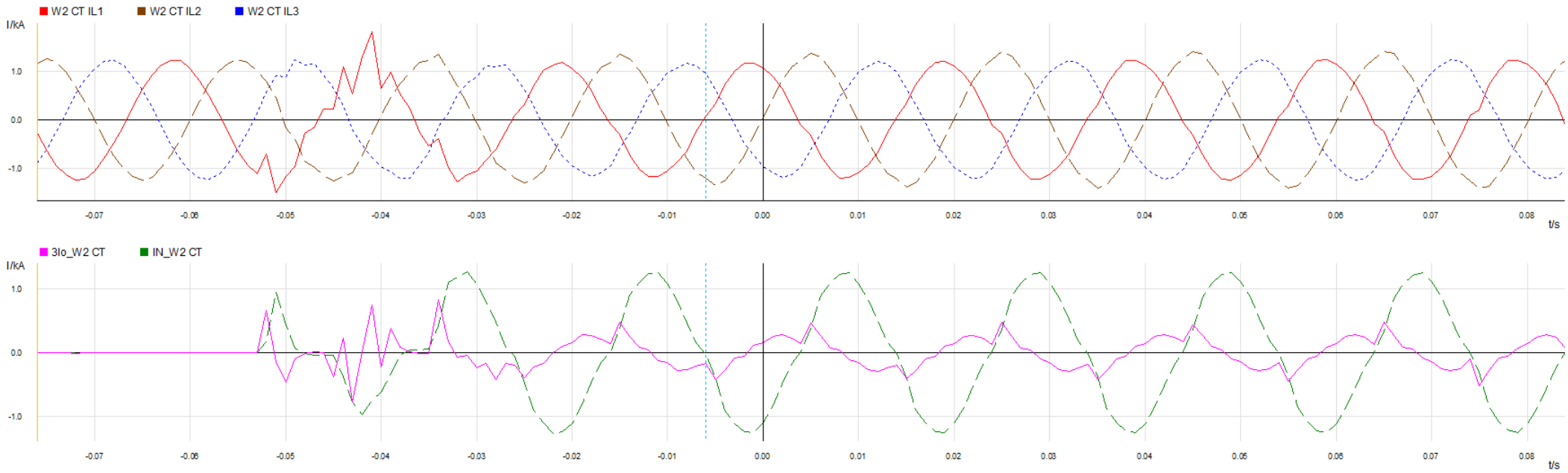

Field Example No 1: Residual current magnitudes during Internal Ground Fault

W2 side is a 33kV winding grounded via a 1000A resistor. W2 CTR=2500/1; NP CTR=1600/1

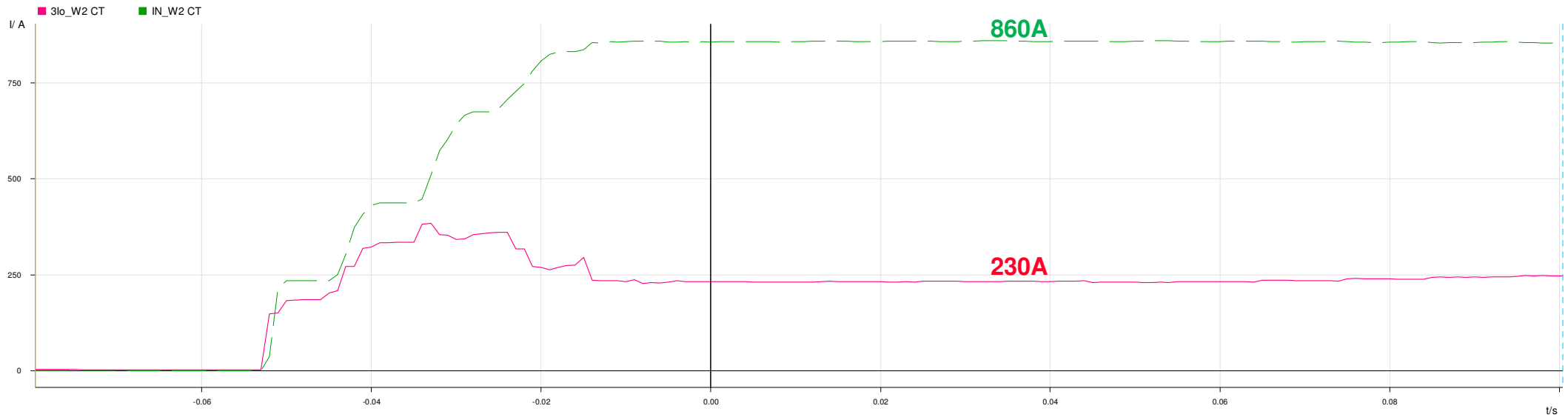

Field Example No 1: Phasor Diagram

Why angle between 3Io_W2 and IN_W2 is approximately 90˚?

REF protection did not operate for this internal ground fault.

Fault was cleared by the 87T function when it developed into Ph-Ph fault.

Total fault clearance time was around 300ms.

3Io current was leading the IN current for approximately 90°.

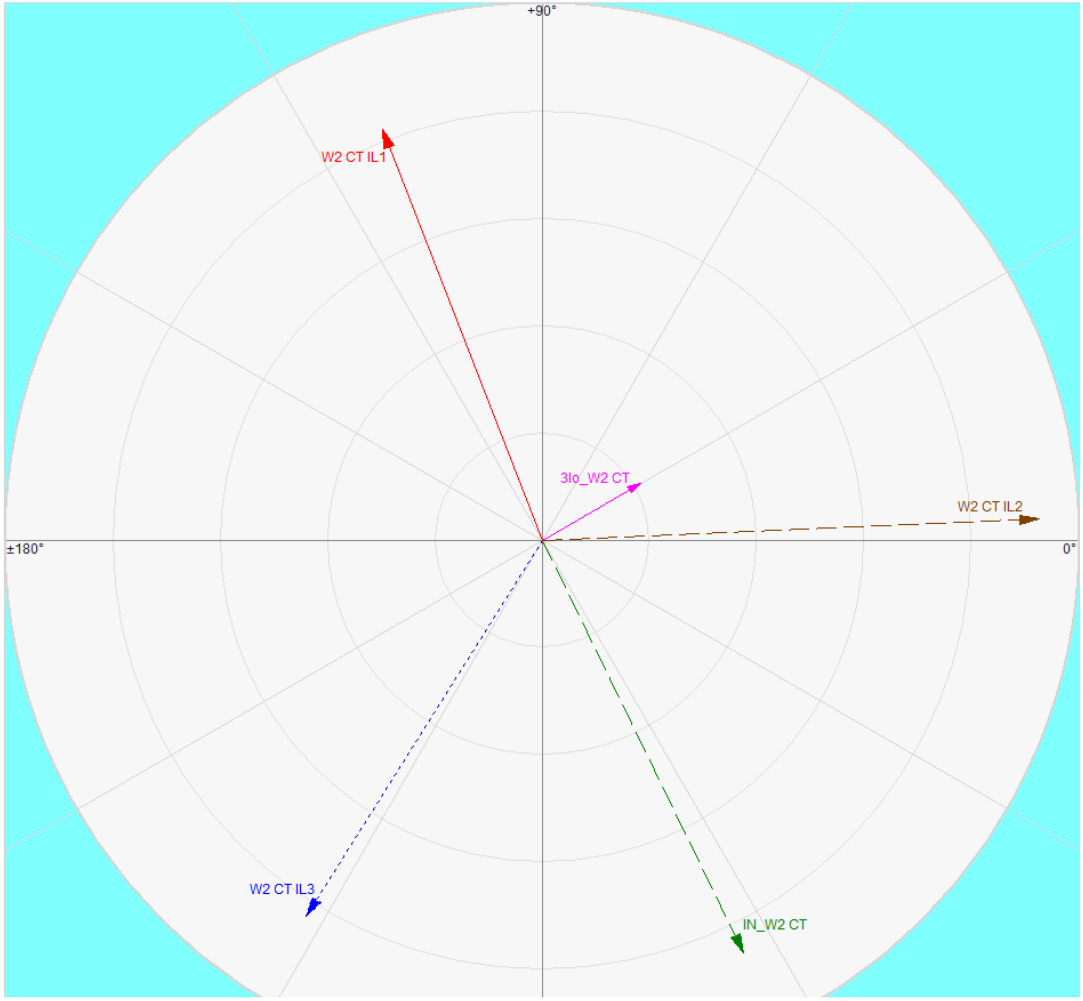

Field Example No 2: Residual current waveforms during internal GF

W2 side is a 35kV winding grounded via a 300A resistor. W2 CTR=800/1; NP CTR=800/1

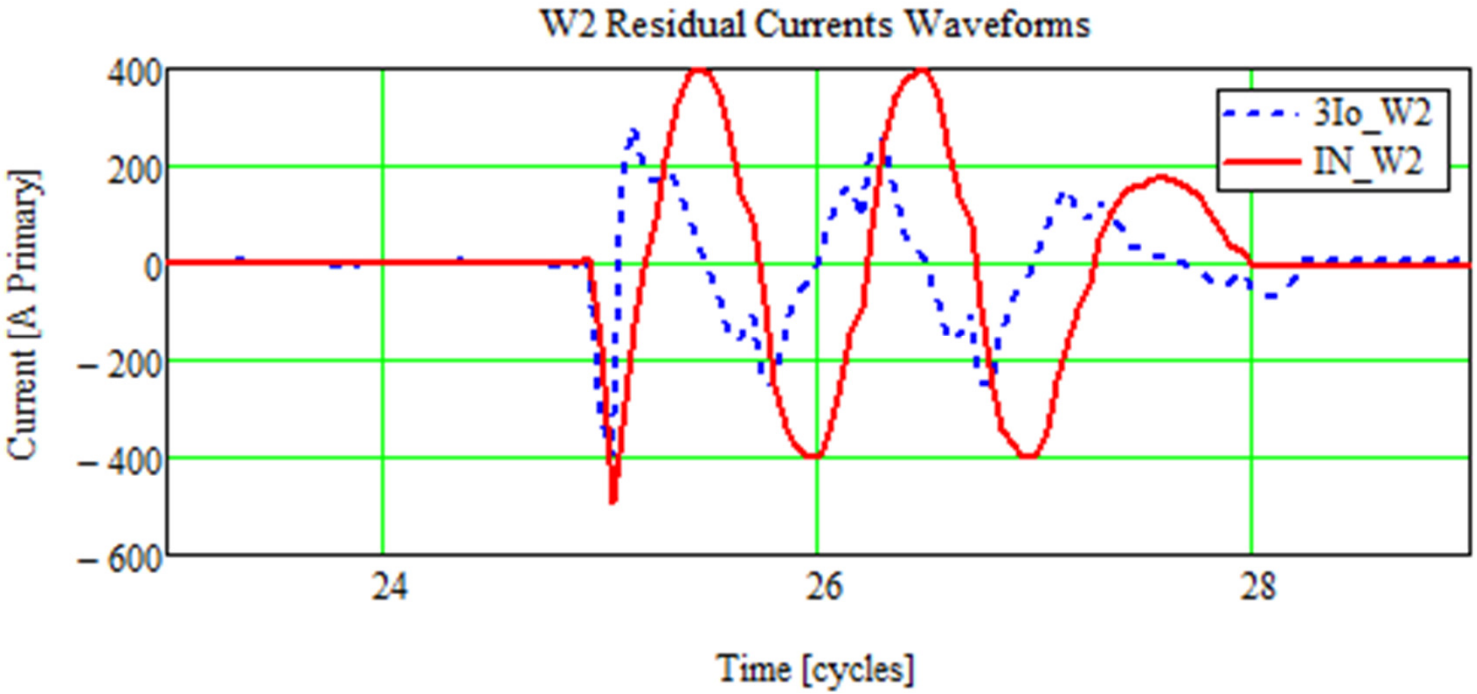

90 degrees phase shift is visible again! Why?

Field Example No 2: Residual Current Magnitudes during internal GF

W2 side is a 35kV winding grounded via a 300A resistor. W2 CTR=800/1; NP CTR=800/1

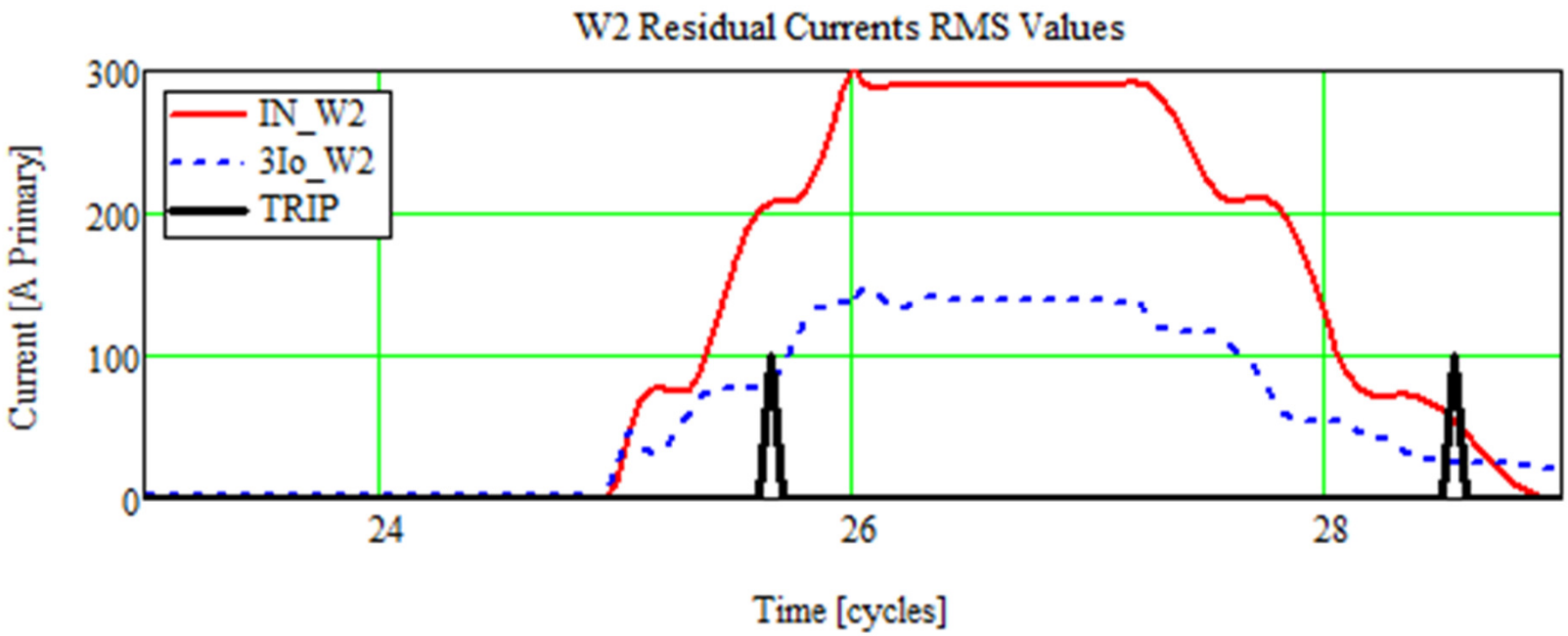

REF protection did operate for this internal ground fault, but the TRIP pulses were extremely short. Why?

Simplified equivalent circuit for the zero-sequence system

During internal earth-fault (i.e. at point F1-int)

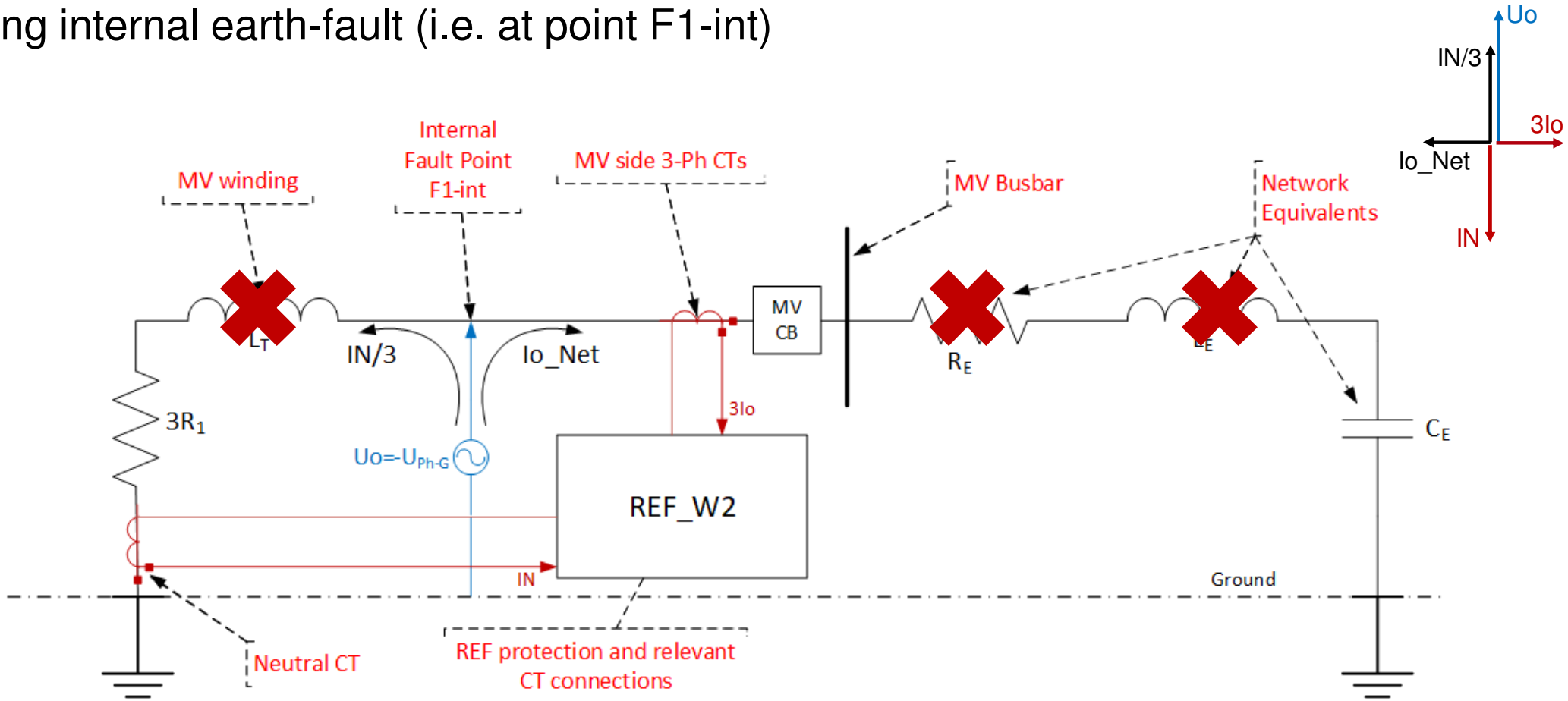

Simplified equivalent circuit for the zero-sequence system

During external earth-fault (i.e. at point F2-ext)

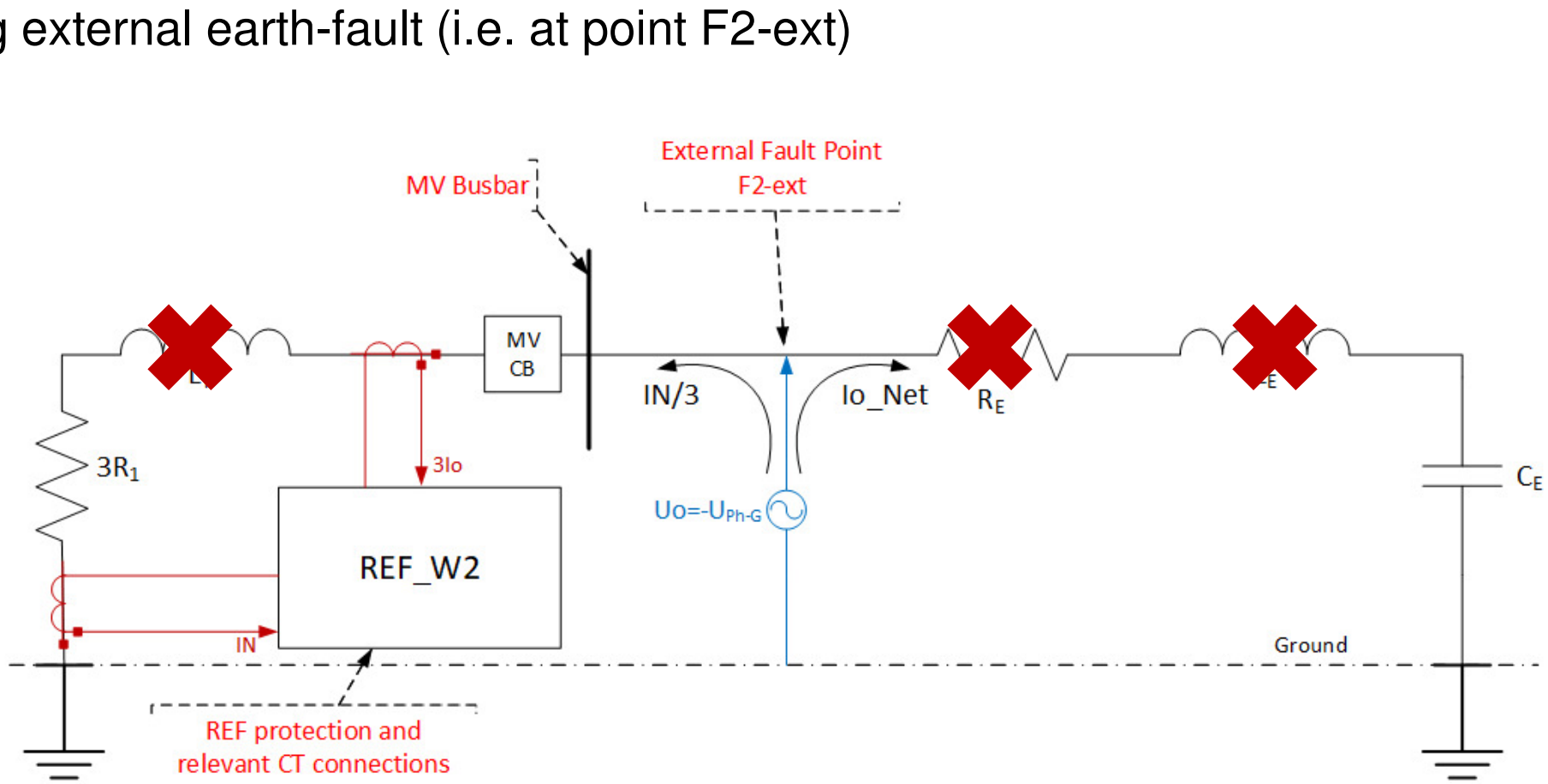

Low Impedance REF Revised Directional Operating Characteristic

Low Impedance REF

1) The directional check is executed if:
   a) $3I_0$ (terminal side) is bigger than 3%

2) The trip condition is fulfilled if:
   a) both $3I_0$ an I_N are within the operating region

3) If the check is not executed (small 3Io currents) then:
   a) this check is not a condition for trip

4) Change ROA value to 115°

Revised Directional REF Characteristic

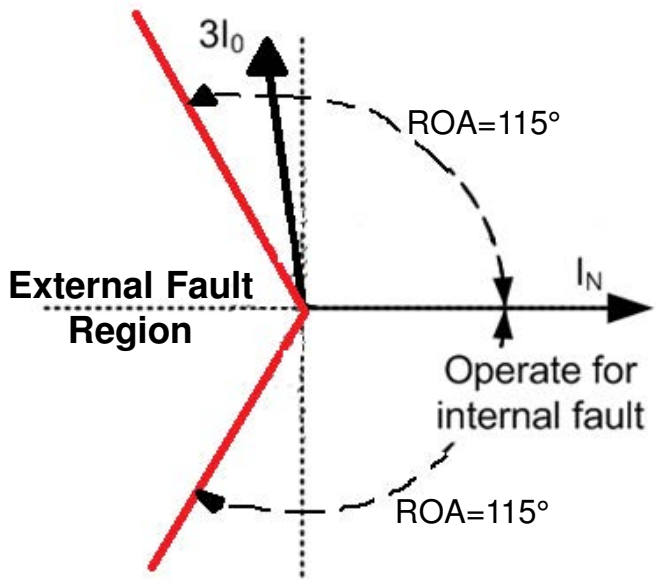

Useful signals for feeder GF protection

What about Feeder GF Protection

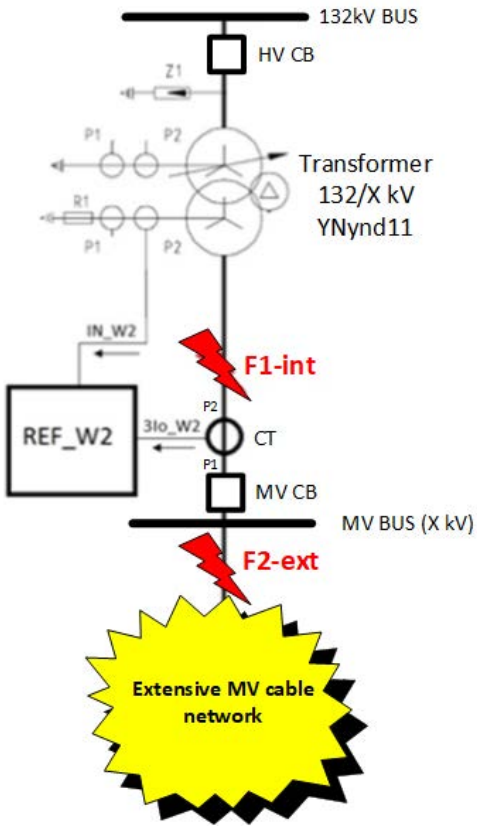

In Extensive Cable Networks:

The following component shall preferably be used for GF protection:

1. Io*cos(ϕ) for the fundamental frequency residual phasors
2. It will be measured only in the faulty feeder
3. In the healthy feeders capacitive GF current will be measured (i.e. Io*sin(ϕ) component) and consequently no problems with coordination

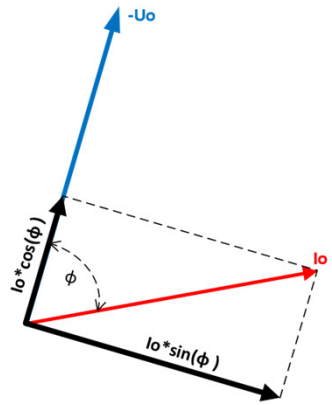

Conclusion:
Io*cos(ϕ) component is preferred for Feeder GF Protection.
Io*sin(ϕ) component shall not be used in extensive cable networks.

Single phase to ground fault in an Offshore Wind Farm

Simplified SLD of the offshore wind farm and GF location in Array Cable Feeder

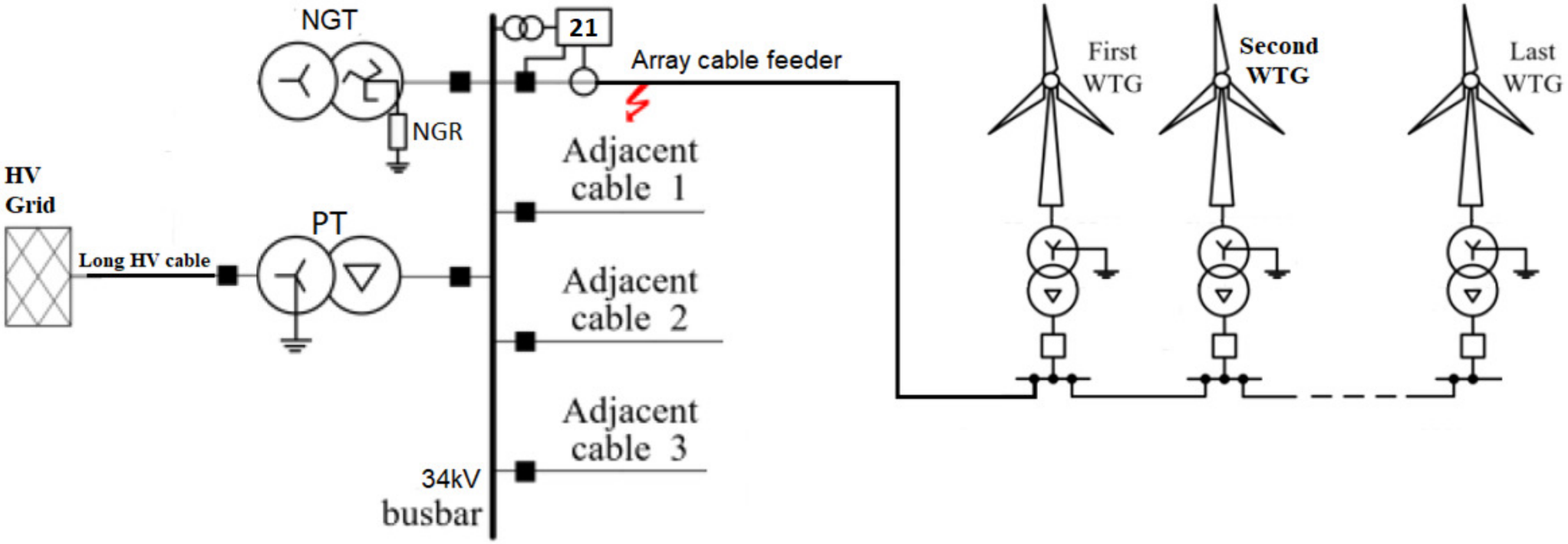

NGR is dominant impedance in the zero-sequence circuit (i.e. resistive grounding)

Array Cable Feeder in an Offshore Wind Farm

Depending on MV voltage level one Array Cable Feeder can be up to 40km Long !!!

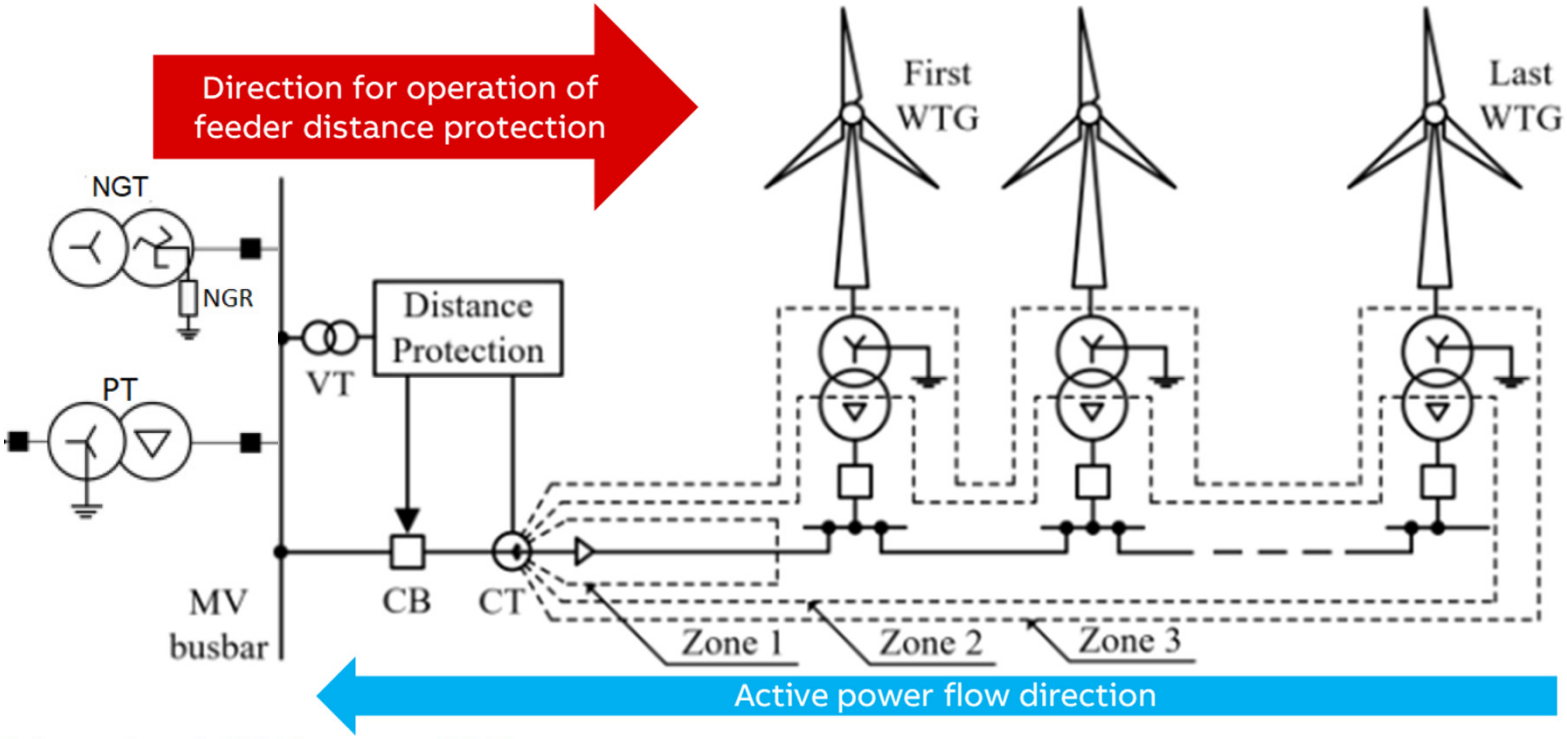

MV Voltage Level: 33kV or even 66kV

What is happening during a Ph-A to Ground Fault in the Array Feeder ?

Typical quadrilateral operating characteristic

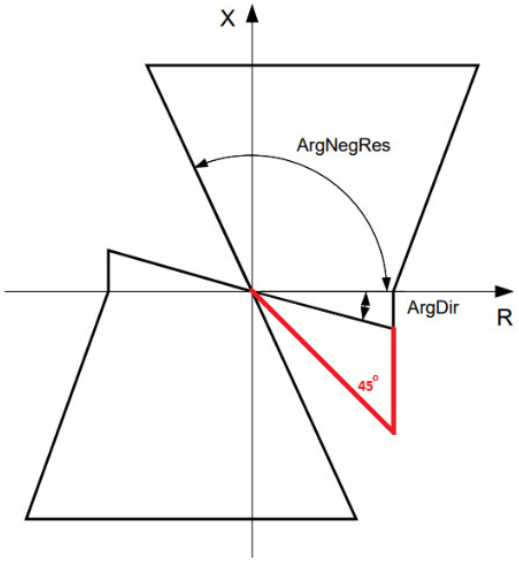

Simplified Diagram

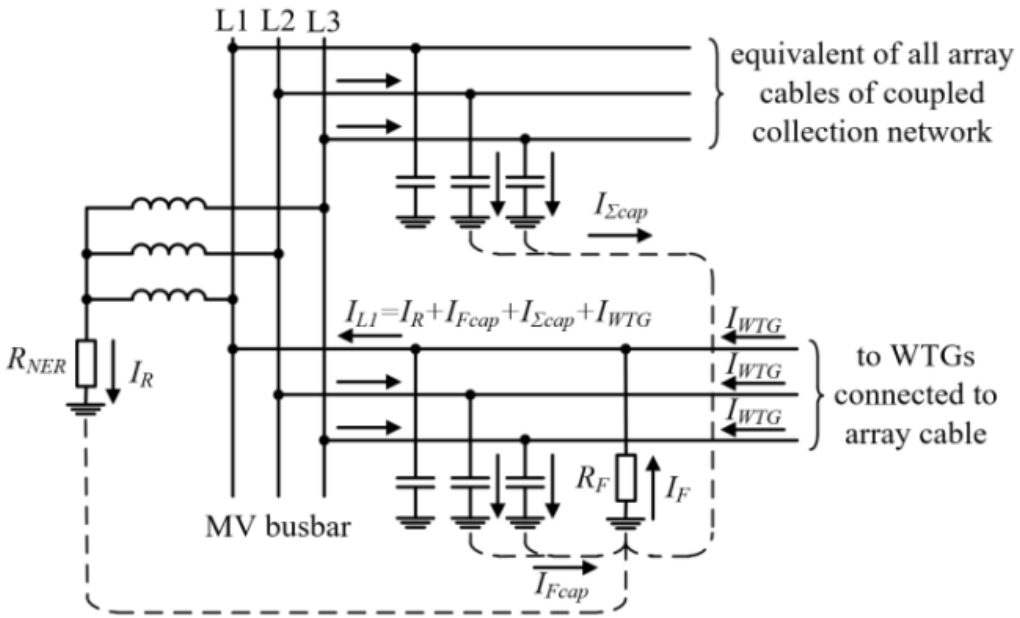

What is happening during a Ph-A to Ground Fault in the Array Feeder ?

Ground Distance Protection

During a GF Ground Distance Element will measure current in the faulty phase (i.e. I_{L1}) which is sum of the following currents:

- I_R (current passing through the NER, resistive in nature)
- $I_{\Sigma cap}$ (current passing through the capacitances of the parallel connected arrays, capacitive in nature & variable; depends on the number of parallel arrays)
- I_{Fcap} (current passing through the capacitances of the faulted array, capacitive in nature)
- I_{WTG} (load current from all downstream WTGs, resistive in nature & variable; depends on the actual wind conditions)

As a result measured impedance may end-up in the fourth quadrant which can cause no operation of the ground distance element.

What will be the worst scenario?

What happens if $I_R \approx I_{WTG}$?

Simplified Phasor Diagram for Ph A to Ground Fault

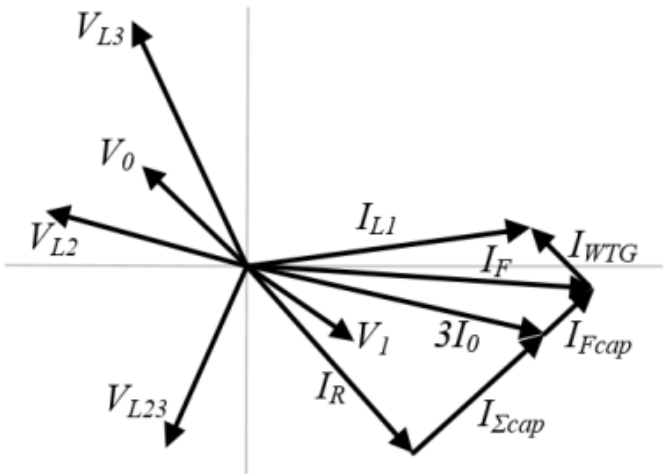

Phase current phasors I_{L2} and I_{L3} are not shown, $V_{L1} \approx 0$ V

Note:
Size of grounding resistor shall be chosen wisely for Wind Farm Installations.

Conclusion: Extensive use of Power Cables do change some things

Increased use of cables in medium voltage distribution grids, high voltage sub-transmission grids and Renewable Generation Farms can significantly raise the capacitive earth fault currents, which in combination with the used grounding principle in the network can pose a problem for proper operation of the earth-fault protection.

Especially low-impedance REF protection having directional criterion can be affected. Set ROA to 115 degrees in order to ensure stable trip signal.

However even standard feeder earth-fault protection can be affected in extreme cases.
Then EF protections based on Io*cos(ϕ) component shall be preferably used in all feeders.

Alternatively Transient EF Protection can be used. That will also ensure operation for Intermittent Ground Faults.

Be careful when using ground distance element in Wind Farm Feeders. The measured impedance for a forward fault may end-up in the fourth quadrant. That may confuse the ground distance directional element. Special measures might be required in order to insure proper operation for ground faults in the feeder.

Comments, Other Opinions or Questions are Welcomed