Process bus busbar protection – a novel solution to eliminate conventional busbar protection constraints and a stepping stone towards digital substations

Chee Pinp Teoh, Philip Newman, Graeme Lloyd, Hua Qin, *GE Power Grid Solution*, *UK*,
Rich Hunt, Jose Mendez, Terrence Smith, *GE Power Grid Solution, Canada*

Abstract

The basic building block of a digital substation is IEC 61850 process bus, or the concept of distributed I/O for protection, control and SCADA reporting. Much of the discussion around digital substation has focused on the mechanics of the devices, architectures, and technologies to publish sampled values (SVs) from merging units (MUs) to protective relays. One challenge that has been ignored is the processing of a large amount of data streams for busbar protection. A busbar protection for a reasonably sized transmission substation requires current measurements from multiple bays, bus couplers, and other sources, which requires much more SV data streams than any other situation in the substation domain.

Despite the challenge, busbar protection using process bus is simply the proven concept of a distributed busbar protection system, using MUs and SVs as opposed to dedicated bay units and proprietary communications. However, a process bus busbar protection is more than just busbar protection with SVs. It is a novel and complete solution which eliminates conventional busbar protection constraints on the bays' connections, simplifies testing, enhances protection and communications reliability and stability, and facilitates time synchronization without relying on satellite clocks.

Integrating process bus simplifies the practical challenges in busbar protection. Redundant protection by connecting a second relay to the network, effortless bay and zone expansion, and reducing limitations on the number of bays and zones. Importantly, a process bus busbar protection application is not limited to just digital substation projects. It can be a standalone busbar protection system, perfect to retrofit conventional busbar protection systems and substations. Once installed, thanks to the standard process bus communication framework architecture, it becomes an excellent stepping stone to convert a conventional substation to a full digital substation.

Index Terms—Busbar protection, busbar testing, digital substation, IEC 61850-9-2LE, process bus, simulation bit and test mode.

INTRODUCTION

Busbar protection is the only protection function in a substation to cross multiple zones of protection. Depending on the architecture, busbar protection may cross all zones in the substation. As a result, the design and installation of busbar protection influences the design and installation of all zones of protection. The choice of architecture for the busbar protection therefore drives future installation of zone protection. The emphasis should be on flexibility, that permits rapid design and installation for protection and control zones. For this reason, a busbar protection system that is based on process bus, subscribing to open digital data from merging units, using the same proven architecture as distributed busbar protection, should be strongly considered. The act of installing IEC 61850 compliant merging units, as opposed to dedicated bay units, makes installing a busbar protection the first step to building a full digital substation, without changing design and installation practices.

PROCESS BUS IMPLEMENTATION IN PROTECTION RELAYS

Relay manufacturers have been introducing process bus protection by replacing the protection relay analogue inputs module with sampled values input module that connects to a process bus communications network. The most common dataset for sampled values (SV) data to use is that defined in the IEC 61850-9-2LE Implementation guidelines. [1] The source of the SV data is a merging unit (MU), installed close to primary equipment. Besides publishing SV data, a typical merging unit also publishes and subscribes to GOOSE messaging for equipment status and control, and is explicitly time synchronized through the communications network using an IEEE 1588 Precision Time Protocol profile. [2] As the digital substation emphasizes the concept of distributed I/O and sampled values, this allows the 19" full rack transmission protection relay to be reduced to a half rack process bus relay which highlights one of the savings and advantages of a digital substation. Many process bus protection relays have been installed, commissioned and are in service in many substations around the world. There is no doubt that process bus

module in the protection relay works perfectly fine for main line differential, distance, transformer and feeder management relays. However, one application that has not been resolved is busbar protection, due to the large amount of data streams required for a busbar protection system.

EXISTING PROCESS BUS BUSBAR PROTECTION

Busbar protection systems based on process bus are available on the market for protection of 6 to 8 zones. For larger substations, the process bus busbar protection relay solution available in the market today is more likely to be a hybrid distributed solution as shown in Figure 1 where sampled values are fed to the bay units before being processed and sent to the central unit for the low impedance busbar protection calculation. The hybrid solution requires additional bay units in between the merging units and the central unit, and therefore it is architecturally a step backwards from traditional protection systems. This paper focuses the discussion on the true process bus busbar protection as shown in of Figure 2 where sampled values are being fed directly to the relay without additional interfaces or processing. The true process bus busbar protection for large substations requires the processing of a large amount of data streams for busbar protection, which places strict requirements on both the communications network, and the central protection unit.

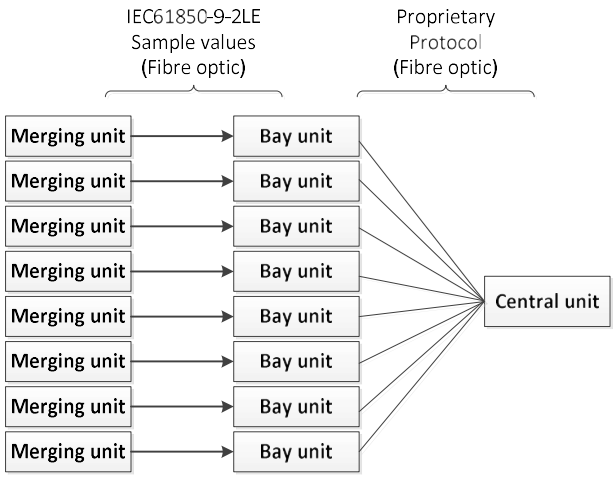

Figure 1: Existing process bus busbar protection

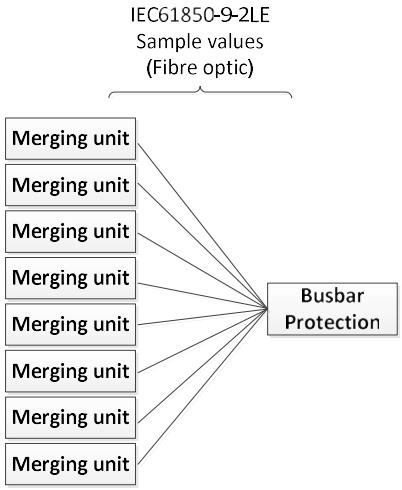

Figure 2: True process bus busbar protection scheme

CHALLENGES OF PROCESS BUS BUSBAR PROTECTION

Consider an example of a reasonably sized transmission substation with 24 bays. Each bay normally has a merging unit and 4 relays, which consists of a pair of relays for Main 1 / Main 2 protection, a backup protection relay and a feeder and breaker management relay. The substation also has Main 1 and Main 2 busbar protection relays collecting sampled value traffic from all the bays. Therefore, this is a total of 122 devices. Assuming each device

publishes 2 GOOSE messages, there will be 244 GOOSE messages and 24 sampled value messages streaming in the process bus network. For this analysis, the GOOSE message is assumed worst case scenario where all the GOOSE packet sizes are the maximum size of 1500 bytes and is assumed to have a status change and GOOSE retransmission of every 1 second.

TABLE 1
PROCESS BUS NETWORK TRAFFIC ANALYSIS ON 50HZ SYSTEM

50Hz system	100 Mbit/s	1 Gbit/s	10 Gbit/s
GOOSE	29.44%	2.94%	0.29%
IEC 61850-9-2LE Sampled values stream (80 samples/cycle)	103.68%	10.37%	1.03%
GOOSE + IEC 61850-9-2LE Sampled values stream (80 samples/cycle)	133.12%	13.08%	1.31%
IEC 61850-9-2LE Sampled values stream (256 samples/cycle)	331.78%	33.18%	3.32%
GOOSE + IEC 61850-9-2LE Sampled values stream (256 samples/cycle)	361.21%	36.12%	3.61%

TABLE 2
PROCESS BUS NETWORK TRAFFIC ANALYSIS ON 60HZ SYSTEM

60Hz system	100 Mbit/s	1 Gbit/s	10 Gbit/s
GOOSE	29.44%	2.94%	0.29%
IEC 61850-9-2LE Sampled values stream (80 samples/cycle)	124.42%	12.44%	1.24%
GOOSE + IEC 61850-9-2LE Sampled values stream (80 samples/cycle)	153.85%	15.38%	1.54%
IEC 61850-9-2LE Sampled values stream (256 samples/cycle)	398.13%	39.81%	3.98%
GOOSE + IEC 61850-9-2LE Sampled values stream (256 samples/cycle)	427.57%	42.76%	4.28%

The network traffic analysis above is based on the digital substation having process bus and station bus in two separate networks. Some applications have GOOSE and MMS traffic only on the station bus, and sampled values only on the process bus. However, this analysis mimics a distributed busbar protection scheme use case where the bay units collect analogue current, input status and output contacts. Therefore the above analysis assumes a worst case scenario where the process bus network has both sampled values streaming and two GOOSE messages per device for equipment status and control information, including protection tripping to the merging units.

A general rule is that the limit for 100 Mbit/s networks is around 10-12 SV data streams to keep network loading from becoming an issue. The calculations in Tables 1 and 2 confirms the 100 Mbit/s network architecture is not adequate for large busbar protection systems. For example, for a 50Hz system, 24 sampled value streams require more than 103Mbit/s network traffic which is beyond what a 100Mbit/s network architecture can handle. The 60Hz system will require even more bandwidth. Although busbar protection requires only current measurement, IEC 61850-9-2LE specifies that each sampled value message includes 4 current and 4 voltage measurement streams, which has a marginal impact on bandwidth requirements. From this analysis, a process bus busbar protection for a reasonably sized transmission substation (24 bays) requires a minimum of 1 Gbit/s for the network backbone for the busbar protection to work efficiently. This also requires the protection relay to support a 1 Gbit/s network Ethernet port for the process bus data.

PROCESS BUS BUSBAR PROTECTION ARCHITECTURE

Looking into the process bus busbar protection architecture, it could be compared and observed as a distributed busbar protection. For example, Figure 3 shows a typical distributed busbar protection schemes. Typical distributed busbar protection scheme in the market utilize proprietary protocol between the bay units and the central unit. This makes the communication between the bay units and central unit a black box to the user and customer, and makes the busbar protection troubleshooting less user friendly.

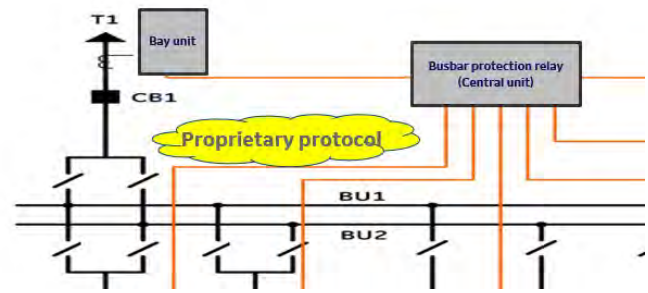

Figure 3: Typical connection of a distributed busbar protection

The true process bus busbar protection scheme utilizes IEC 61850-9-2LE or IEC 61869-9 [5]. sampled values, IEC 61850-8-1 GOOSE messaging [5] and IEEE1588 time synchronization using either the C37.238 “power” profile [5] or IEC61850-9-3 “utility” profile [5] for IEEE 1588 time synchronization between merging units and the central unit. A process bus busbar protection is built on the architecture of Figure 4. Comparing the typical distributed busbar protection scheme and the process bus busbar protection scheme clearly indicates the process bus busbar protection architecture is no different than a standard distributed busbar protection. Therefore, the process bus busbar protection is not a new nor special application. It is simply the field proven concept of a distributed busbar protection system, using merging units, sampled values, GOOSE and IEEE 1588 as opposed to dedicated bay units and proprietary communications.

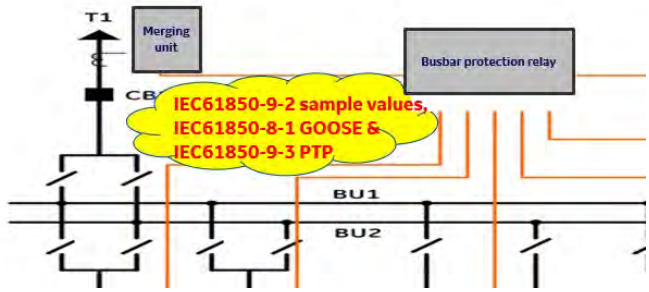

Figure 4: Typical connection of a process bus busbar protection

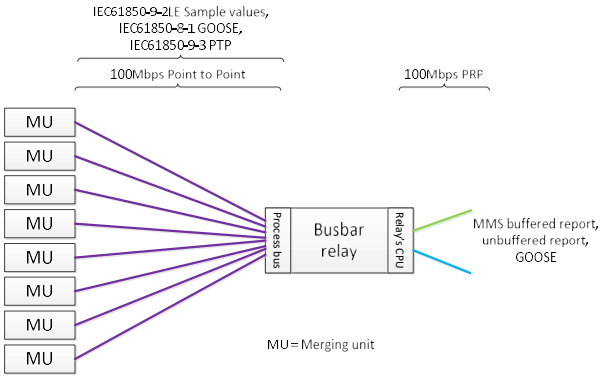

Figure 5: Typical connection of a process bus busbar protection (Figure 2)

Conventional busbar protection scheme is generally divided into 2 categories: centralized busbar protection and distributed busbar protection. Process bus busbar protection as described above has the architecture of distributed busbar protection. However, looking in-depth look at how the process bus busbar protection works, the scheme allows the central unit (busbar protection relay) and bay units (merging units) to operate independently. In short, the busbar protection relay and merging units are totally independent units. The merging unit converts analogue current and voltage signals into sampled values, and transmits and receives GOOSE messages for its inputs status and to operate its contacts. Whereas, the busbar protection relay receives sampled values, transmits and receives GOOSE messages, and provides busbar protection. All are done with standard, open datasets defined under IEC 61850. From a protection point of view, the process bus busbar protection works independently as a centralized busbar protection relay. This again is the proven concept of the conventional centralized busbar protection scheme. Therefore, as technology advances, the centralized and distributed concept become blurred and ambiguous. However, the concept of distributed and centralized busbar protection is merely how the busbar protection is

provided. What is most important from a user point of view is the busbar protection works and provides adequate protection.

The focus of this paper is that process bus busbar protection is not just another protection relay merely working with SV data. It is a novel and complete solution which eliminates conventional busbar protection constraints on the bays connections, simplifies testing, enhances protection and communications reliability and stability, and facilitates time synchronization without necessarily relying on a satellite clock.

ADVANTAGES OF PROCESS BUS BUSBAR PROTECTION

A. Simplify busbar protection scheme configuration

Configurating a traditional distributed busbar scheme is difficult due to many devices in the busbar scheme. For example, conventionally, to configure a distributed busbar protection scheme with 24 bays requires the user to configure each of 24 bay units individually. However, since the process bus busbar protection scheme is built on the IEC 61850 network, the configuration on the merging units need not be done bay by bay anymore. A single IEC61850 SCL (Substation Configuration Language) [5] file can configure all the merging units as an integrated whole. Also, in a rare scenario that an upgrade to the busbar protection relay software is required, as the busbar protection relay and merging units work independently, the software upgrade is required at the busbar protection relay only. The merging units are not affected by this busbar protection relay upgrade and no software upgrade and new configuration is required at the merging units. Vice versa, if a software upgrade is required at the merging units, no software upgrade at the busbar protection relay is required. Upgrading the merging units software is similar to the merging units configuration. This need not be done bay by bay in the field, but could be done in one step via a connection to the process bus network. This significantly simplifies the distributed busbar protection software and configuration setting management.

B. Wiring and redundant communication

A conventional centralized busbar protection has complicated wiring, as wiring for all currents, status, and control points must be installed to the main unit. Conventional distributed busbar protection simplifies field wiring by using bay units, but most use dedicated point-to-point fibre optic connections between the bay units and the central unit, requires a fibre optic cable and communications port at the central unit for each bay. Integrating process bus in busbar protection keeps field wiring the same as with distributed protection: wiring for each bay is connected to a merging unit. The advantage is that the merging units and the busbar protection unit are connected to the process bus communications network, using IEC 61850-based communications and standard time synchronization. The central busbar protection unit needs only a single communications port to collect all data needed for protection.

This network-based solution has the advantage of easily allowing redundant communications paths without requiring significant additional cabling. High availability network protocols such as PRP (Parallel Redundancy Protocol) and HSR (High-availability Seamless Redundancy) are defined in IEC 62439-3. [5] Both PRP and HSR connections require only 2 pairs of fibre optic cables connecting to the central unit for redundant communications, and it is not dependent on how many bays or merging units are in the busbar protection. Figure 6 and Figure 7 show how process bus busbar protection could operate with PRP and HSR technology. Both protocols are appropriate to use for bus protection, and have advantages and disadvantages based on application requirements. [5] Simplifying connection to only 2 pairs of fibre optic cables not only save on the wiring labour cost and limits human wiring mistakes, but it also makes busbar protection scheme simpler and more flexible design compared to the conventional busbar protection scheme.

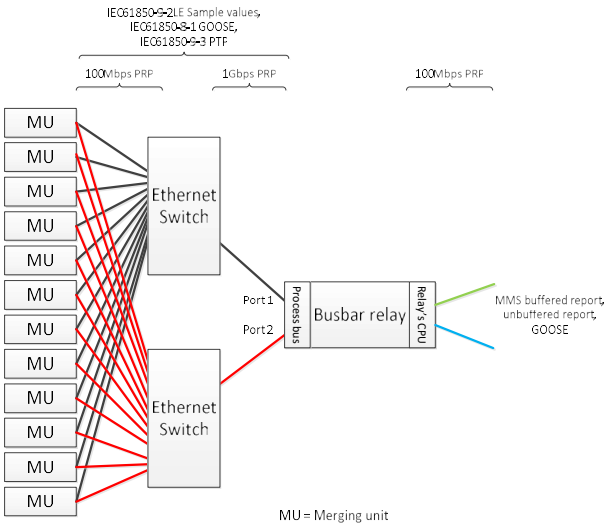

Figure 6: Process bus busbar protection with PRP process bus connection

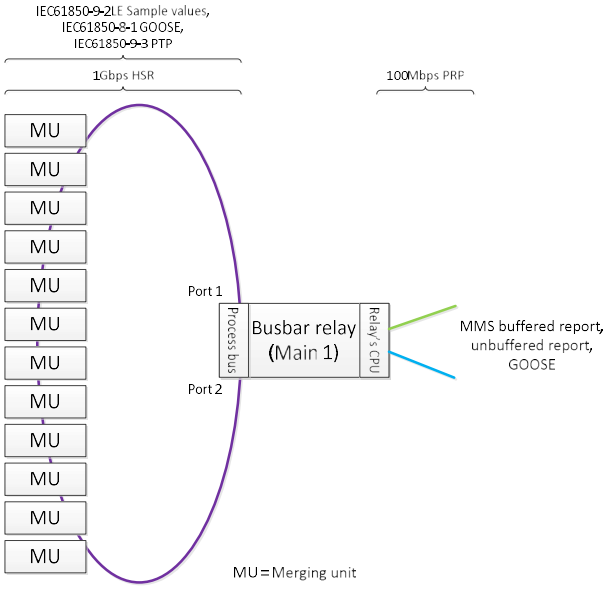

Figure 7: Process bus busbar protection with HSR process bus connection

C. Bay number and zone number

A common problem of conventional busbar protection is its limitation on the number of bays and number of protection zones. This becomes more of problem as the power network becomes complex with more bay extensions. Also, having too many bays in a single busbar zone introduces higher bias or restraint current in low impedance busbar schemes, which unnecessarily desensitizes the busbar protection. An alternative solution to larger substations is to split the substation into multiple zones and multiple busbar protection schemes. Splitting the substation into bus zones results in a complex, complicated wiring design and relay configuration that is challenging to design, time consuming to install, difficult to commission, and with a high risk of error at every step.

Process bus busbar protection will have similar limits to the number of bays, based on the number of SV streams the central unit can subscribe to. However, a process bus busbar protection scheme is a solution to this constraint because a process bus busbar protection scheme is not affected by the complex busbar wiring but uses only two pair of fibre optic cables, independent of how many bays there are in the substation. Therefore, splitting the larger substation into two or more busbar protection schemes becomes easy with the process bus busbar protection scheme. Each central unit connects to the process bus network, and subscribes to only the SV and GOOSE messages from the necessary merging units. Therefore, there is no complex field wiring to connect, only straightforward device configuration. Due to its convenient method of splitting the larger substation into multiple

busbar protection schemes, a process bus busbar protection practically can be said to have almost no limit on bays and zones anymore. For example, for a smaller substation with 18 bays, a single busbar central unit relay box will do; whereas for a larger substation of 36 bays, two busbar central unit relay boxes could provide adequate protection without desensitizing the protection.

Figure 8 illustrates a split bus system using standard Ethernet networks. Both busbar relays connect to the process bus network, but they only subscribe to data from the merging units associated with a specific part of the bus. Figure 9 shows the same split bus concept using an HSR ring for the process bus communications. Once again, each busbar relay only subscribes to data from some of the merging units.

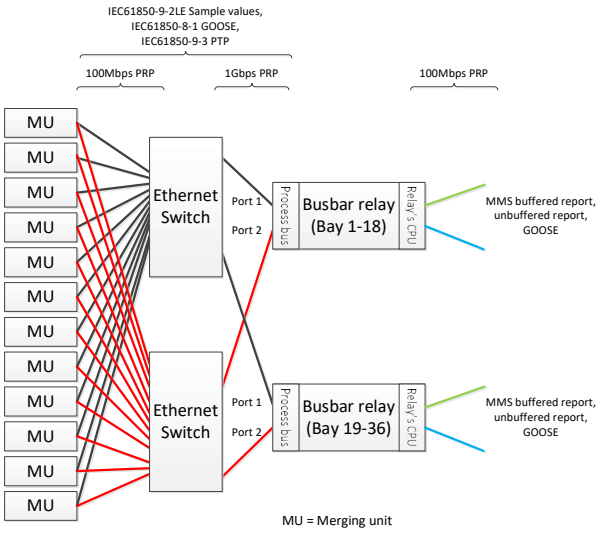

Figure 8: Splitting bus zones for a larger substation using Ethernet process bus networks

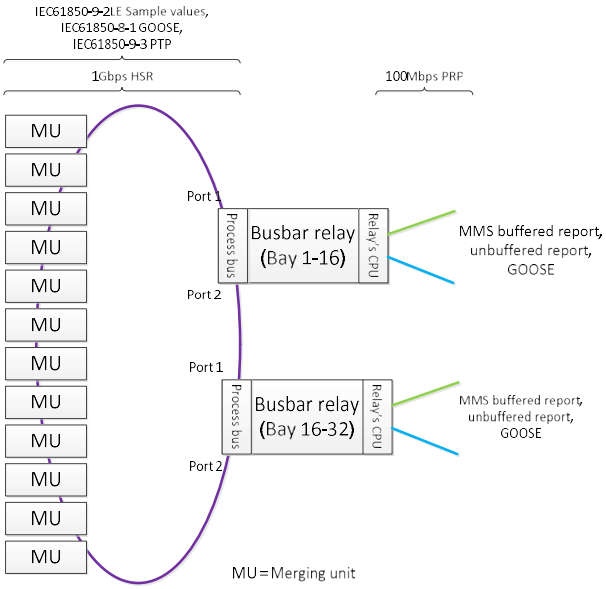

Figure 9: Splitting bus zones for a larger substation using an HSR ring

D. Redundant busbar protection central unit

Due to the criticality of busbar protection, some customers require redundancy for reliability purposes. This can take the form of Main 1 / Main 2 bus protection, or in the case of distributed systems, 2 central units are required, with one in hot standby in case the main central unit fails. A true process bus busbar protection is far more capable than a hot standby central unit solution. Using two busbar relays, both a hot standby system or Main 1 / Main 2 system can be supported. The two relays connect with 2 pairs of fibre optic cables, communicate to the same merging units, and use the same data. Therefore the two units offer Main 1 and Main 2 busbar protection with both relays active at the same time, providing fully redundant protection. Redundant Main 1 and Main 2 protection offers a better

advantage than hot-standby. This is true for any network connection, both the PRP networks of Figure 10 and the HSR ring of Figure 11.

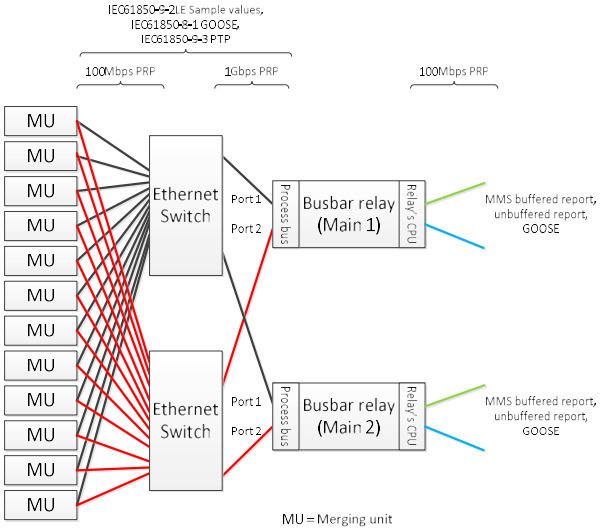

Figure 10: Main 1 / Main 2 process bus busbar protection with PRP networks

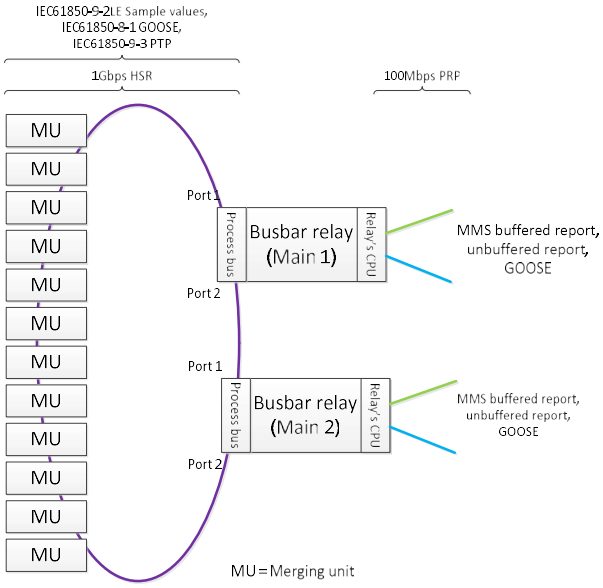

Figure 11: Main 1 / Main 2 process bus busbar protection with HSR rings

Close observation of Figure 8, Figure 9, Figure 10, and Figure 11 show identical connections for busbar protection to split a large bus, or to provide Main 1 / Main 2 protection. This is part of the flexibility of process bus. The physical connections are the same: it is a simple matter of configuration to provide different applications.

E. Better CT supervision

Conventional substations use multiple CTs per bay. For example 4 set of CTs are installed at an incoming bay: two sets are used for Main 1 and Main 2 line protection, another set for backup protection and the fourth set for busbar protection. This is so that a single CT failure will not cause the failure of all the protection. Moving to the digital substation, process bus technology reduces the need for multiple CTs because the analogue current signals are now fed to merging units connected to the process bus network, and can be subscribed to by multiple relays. A good practice is to have second set of CTs and merging unit publish another sampled values stream for redundancy. The process bus busbar protection can take advantage of these redundant sampled values streams to prevent maloperation due to the failure of a merging unit or a CT. Process bus busbar protection subscribing to two redundant sampled value streams can do comparison of both streams. In the event of detecting any inconsistency of measurement between the two, the relay can immediately raise an alarm to the user and even block protection to

prevent maloperation. This feature is simply done by comparing the samples of the redundant streams. It is a very robust and practical CT supervision practice, significantly better than any traditional CT supervision function.

F. Total redundant

Process bus busbar protection can operate with redundant central units, or as Main 1 / Main 2 protection, with each central unit subscribing to SV data from different merging units. With redundant merging units for Main 1 / Main 2 protection, measuring the same currents, busbar protection can have fully redundant protection and fully redundant measurement. For example, Figure 12 shows two set of CTs and merging units connected to two independent HSR 1 Gbit/s rings. The 2 independent HSR rings offer a true redundant scheme. This scheme requires each central unit to connect to both HSR rings independently, and therefore requires the units to have 4 fibre optic ports and connections. These are independent connections for redundancy, and are not a QuadBox segmentation or linkage as defined in IEC 62439-3 Clause 5. The two units of process bus busbar protection relays work as Main 1 and Main 2 busbar protections, but subscribe and process both redundant sampled value streams from each ring. This total redundant protection scheme was not possible in the conventional busbar protection without significant additional cost and complicated wiring. However, the process bus busbar protection can offer this total redundant scheme for additional security and reliability at the small cost of connecting an additional two pairs of fibre optic cables, without any additional field wiring.

There is one practical concern using redundant sampled value streams for CT supervision or for fully redundant protection. The busbar relay will have a fixed number of subscriptions to SV streams. Every redundant stream reduces the number of bays that can be protected by one. So a fully redundant system can protect half the number of bays. However, thanks to the flexible process bus busbar scheme, another pair of busbar relays could be added to cover all bays.

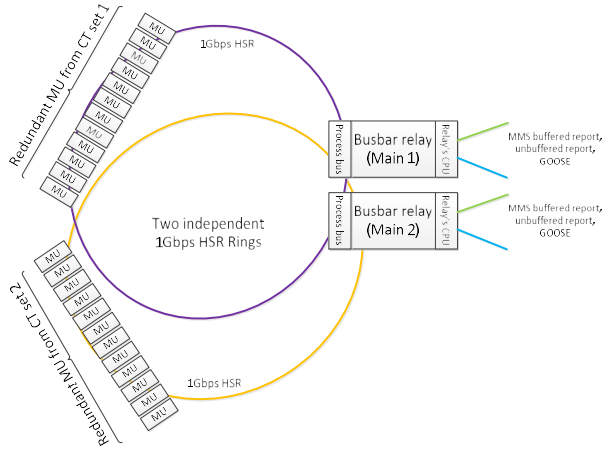

Figure 12: Process bus busbar protection with dual redundant HSR ring process bus connection for total redundant scheme

G. Simplify busbar testing with IEC61850 simulation bit and test mode

Testing a traditional busbar protection scheme is complicated. During the testing, the real substation current/voltage sources and any other inputs like binary inputs are disconnected and replaced by the signals from a simulator or test device. The use of test blocks in the hardwired scheme design facilitates this procedure. The simulated signals should be connected to the relay devices carefully to ensure the correct assessment of the tests as well as to avoid any damage to the device under test, and to prevent possible undesirable operation of related in-service equipment. Due to the lack of standard connections, the hardware connection diagram is provided for each device, typically in the form of the substation AC and DC schematics. The relay outputs are disconnected or blocked to avoid tripping of the circuit breaker and initiation of any breaker failure protection. This typically involves studying the DC schematics to ensure appropriate isolation links / test blocks have broken the appropriate circuits. After the tests are complete, the simulated signals are removed and original connections are restored. If the simulated signals are left in the system or the original connections are not fully restored, serious problems may occur. Because this testing is based on procedure, there is a considerable risk of human error leading to undesirable results.

Process bus busbar protection can simplify busbar protection scheme testing with IEC 61850 test mode, simulated data and simulation mode. As described in the simple busbar protection scheme configuration above, the busbar protection scheme (relays and MUs) can be configured by a SCD (Substation Configuration Description) XML file. To test the busbar, the test device or simulator can import the same SCD file to create simulated signals to test the busbar relay. As the same file is used to configure the simulator as well as the real system, there is a natural

guarantee that the configuration of simulator is correct and the sampled value streams or GOOSE messages from the simulator are the same as the sampled value streams or GOOSE messages from the MUs. SV and GOOSE messages that simulate actual normal SV and GOOSE messages can now be published to the network easily. Only devices operating in simulation mode will subscribe to and use these simulated messages in place of actual, normal messages. Figure 13 shows a test device injecting simulated sampled values directly into the network and monitoring the tripping GOOSE message from the busbar relay. The user can also switch the relay and MUs to IEC 61850 test mode (as defined in IEC 61850-7-1 [10]). This allows the relay application to operate normally but all the relay outputs are blocked. Therefore, a process bus busbar protection scheme simplifies busbar scheme testing as a minimum, and may also require no field wiring changes during testing.

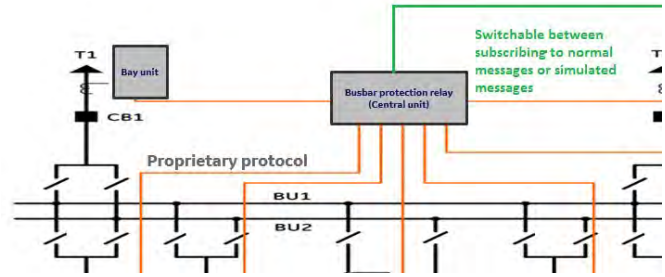

Figure 13: Process bus busbar testing arrangement.

H. Busbar monitoring

Conventional busbar protection always uses a proprietary protocol which appears as a black box to the user. However, the process bus busbar protection uses communications under the IEC 61850 standard. The communications can be monitored and examined easily with widely available network analysers, test tools, and simulators. Since the actual communications between the busbar protection and merging units is now openly available to the user to understand and monitor, busbar testing can be simplified to test the merging units and busbar protection relay separately. For example, merging units could be tested with secondary injection and input/output status testing, and the sampled values and GOOSE messages published by the merging unit are monitored to confirm the validity. The user can also check these same measurements created during testing of the merging units in the busbar protection relay, or with a substation HMI.

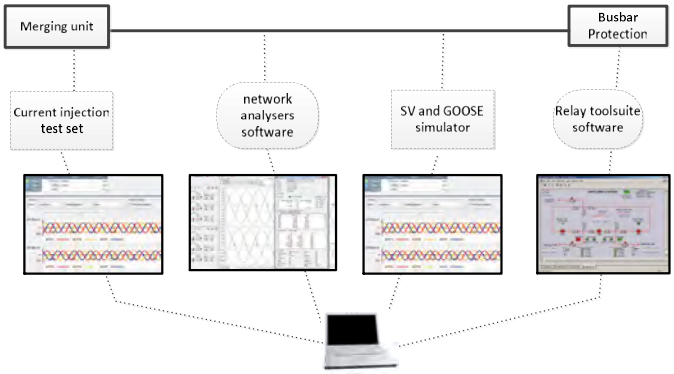

Figure 14: Process bus busbar scheme testing and monitoring

I. Time Synchronization

The proper method for time synchronization for process bus is to use one of the industry-specific application profiles of IEEE 1588 (or PTP, “precision time protocol”) as the protocol, over the communications network. It is absolutely necessary that merging units be time synchronized to each other for protection functions to operate properly. It is desirable for protection relays to be time synchronized as well. Relays and merging units therefore have slave clocks synchronized to IEEE 1588 master clocks connected to the communications network. One technical advantage of IEEE 1588 is that it permits the use of multiple master clocks on the same network, so the failure of one clock doesn’t result in a synchronication failure.

In a digital substation, with good architecture design including duplicated master clocks, it is unlikely to lose all the time masters. But if this rare situation occurs, all the merging units and the busbar protection lose time synchronization. The busbar protection function must be blocked under this situation. However, the busbar

protection relay can be designed to act as an IEEE 1588 boundary clock. Under IEEE 1588, a boundary clock essentially sets up a time zone inside the larger network. All the devices in this time zone are synchronized to the boundary clock. In normal operations, the boundary clock is synchronized to the substation master clocks. However, if the master clocks are no longer available, all merging units communicating to the busbar protection will be synchronized with the same relative time to the busbar protection, allowing protection functions to remain in service. Since the busbar protection will interface to the majority of the merging units in the substation, most protection in the substation will still operate in this unlikely scenario.

J. Process bus busbar protection application in a conventional substation

The general perception is that process bus technology and process bus protection relays are limited to digital substation applications only. However, as described, there are many advantages of using a process bus busbar protection relay. There are indeed a lot differences between digital substations and conventional substations, but a major barrier of slowing process bus adoption in a conventional substation is the requirement of the time synchronization. Absolute time synchronization for protection is not normally required in the conventional substation. However, what busbar protection requires is not absolute time synchronization, but it is the synchronization between the bay units and central unit. For example, distributed busbar protection always uses its own proprietary protocol to time synch the bay units with the central unit. The IEEE 1588 boundary clock capability as discussed allows the process bus busbar protection relay to act as a master clock to synchronize all the merging units in the system. As long as all the merging units are synchronized to the same source, the busbar protection relay, the sampled values streams can be aligned and used for the low impedance busbar differential protection. This therefore allows the application of the same process bus busbar protection in a conventional substation without the need of a satellite clock or absolute time synchronization. This again affirms process bus busbar protection is simply the proven concept of a distributed busbar protection system, using merging units, sampled values and IEEE 1588 as opposed to dedicated bay units and proprietary communications.

STEPPING STONE TO DIGITAL SUBSTATION

Busbar protection is required in almost all substations. The common method for large substations is distributed busbar protection using dedicated bay units and proprietary communications protocols to the central unit. Refurbishing the busbar protection means replacing the bay units, the central unit, and possibly the communications cabling. With the development and adoption of IEC 61850, to use proprietary solutions now makes little sense. A process bus busbar protection system is a better choice: design and installation are simpler, the system is more flexible, and the use of open standards results in a more future-proof design. But the biggest advantage is that installing a busbar protection system, which is necessary, becomes the first step towards a fully digital substation. Merging units are installed in all bays, along with a process bus network encompassing all bays. This means process bus for every bay and zone of protection is already installed. Future relay refurbishments for bays and zones will involve simply connecting relays to the existing network and merging units. So a good program for adopting process bus could be to install the busbar protection first, then roll out other zones based on experience and need.

CONCLUSION

A true process bus busbar protection is not just another busbar protection relay working with sampled values, but it is a novel and complete busbar protection solution which offers many advantages including simpler and more flexible design compared to the conventional busbar protection scheme. The process bus busbar protection scheme is not limited to digital substation applications, but it is perfectly suitable to be used in a conventional substation and works as an intermediate solution to convert a conventional substation to a digital substation.

REFERENCES

[1] “Implementation Guidelines for Digital Interface to Instrument Transformers Using IEC 61850-9-2”, UCA International Users Group, Raleigh, NC, 2004.
[2] IEEE Standard 1588-2008, “IEEE Standard for a Precision Clock Synchronization Protocol for Networked Measurement and Control Systems”, IEEE, New York, NY, 2008.
[3] IEC International Standard " Instrument transformers – Part 9: Digital interface for instrument transformers", IEC Reference number IEC/TR 61869-9:2016(E), IEC, Geneva, Switzerland.
[4] IEC International Standard "Communication networks and systems for power utility automation – Part 8-1: Specific communication service mapping (SCSM) – Mappings to MMS (ISO 9506-1 and ISO 9506-2) and to ISO/IEC 8802-3", IEC Reference number IEC/TR 61850-8-1:2011(E), IEC, Geneva, Switzerland.
[5] IEEE Standard C37.238-2017, “IEEE Standard Profile for Use of IEEE 1588™ Precision Time Protocol in Power System Applications”, IEEE, New York, NY, 2017

[6] IEC/IEEE International Standard "Communication networks and systems for power utility automation – Part 9-3: Precision time protocol profile for power utility automation", IEC Reference number IEC/TR 61850-9-3:2016(E), IEC, Geneva, Switzerland.
[7] IEC International Standard "Communication networks and systems for power utility automation – Part 6: Configuration description language for communication in electrical substations related to IEDs", IEC Reference number IEC/TR 61850-6:2009(E), IEC, Geneva, Switzerland.
[8] IEC International Standard "Industrial communication networks – High availability automation networks – Part 3: Parallel Redundancy Protocol (PRP) and High-availability Seamless Redundancy (HSR)", IEC Reference number IEC 62439-3:2016, IEC, Geneva, Switzerland.
[9] R. Hunt, B. Popescu, "Comparison of Reliable Communication Networks for Protection and Control Applications", Georgia Tech Protective Relaying Conference, Atlanta, GA, April, 2016.
[10] IEC International Standard " Communication networks and systems for power utility automation – Part 7-1: Basic communication structure – Principles and models", IEC Reference number IEC/TR 61850-7-1:2011(E),

BIOGRAPHIES

Chee Pinp Teoh has a B.Eng (Hons) from University Kebangsaan Malaysia and a MBA from University Putra Malaysia. Chee Pinp is also a Professional Engineer registered under Board of Engineer Malaysia and member of Institute of Engineer Malaysia and Institution of Engineering and Technology. He has rich experience in Transmission and Distribution protection relay applications. Presently, Chee Pinp is the Product Manager for GE Grid Solution, based at Stafford UK. He is responsible for current differential and busbar differential application for GE MiCOM Px40 and UR Multilin relays.

Rich Hunt is a Senior Product Manager with GE Grid Solutions, focusing on digital substation solutions for protection and control systems. Rich has over 30 years experience in the electric power industry with both utilities and solution providers, and has authored more than 35 technical papers presented at more than 90 conferences. Rich earned the BSEE and MSEE from Virginia Tech, is a Senior Member of IEEE, a member of the Main Committee of the IEEE Power System Relaying Committee, the U.S. representative to the CIGRE B5 Technical Committee, and is a registered Professional Engineer.

Graeme Lloyd has a B.Eng (Tech) Hons Degree in Electrical and Electronic Engineering from the University of Wales Institute of Science and Technology and an M.Phil from the University of Wales College Cardiff, and is a Chartered Engineer, and is a Member of the Institute of Engineering and Technology. Previously a design engineer at South Wales Switchgear and Transformers, he has also held a number of protection applications engineering positions within GE Grid Solutions, Stafford since 1994 prior to his current role. Currently he is the Product Applications PM Leader responsible for providing applications support for the protection relay products.

Jose Mendez has 27 years of experience in the P&C industry, accumulated wide range experience when performing on different roles (Electrician, Quality Control Inspector, Field Engineer, Project Engineer, Sales and Tech Support Manager, Product Manager and Business Development Manager) with world class companies (AEG, ALSTOM, GE) and interacting with most customer types (private or government owned utilities, industrial, mining, Oil and Gas, commercial, etc).

Hua Qin is the leading test engineer in GE Grid Solutions. She graduated from Huazhong University of Science and Technology China in 2009 with a Master degree in power system and its automation. She started her career as a protection application software engineer in Alstom China and then worked as a verification test engineer and validation test manager before taking the role in GE Grid Solutions UK in 2014. Since then, she focuses on the IEC 61850 conformance tests and starts the cyber security test. She is the UCAlug accredited IEC 61850 Edition 1 and Edition 2 Conformance tester and a member of IEC TC57 WG10 member.

Terrence is a Commercial Application Director for the GE Grid Automation North American Commercial team. In this role he leads the team of technical application engineers supporting the Protection and Control portfolio. He joined GE in 2008 supporting the Grid Automation Protection and Control Portfolio. Prior to joining GE, Terrence has been with the Tennessee Valley Authority as a Principal Engineer and MESA Associates as Program Manager. He received his Bachelor of Science in Engineering majoring in Electrical Engineering from the University of Tennessee at Chattanooga in 1993 and is a professional Engineer registered in the state of Tennessee.