# High-Impedance Faults: Comparing Algorithms

Daniel Ransom, PE
GE Grid Solutions

# Our discussion

Definition and causes of high-impedance fault (HIF)

Methods for HIF detection

Method comparisons

Implementation strategies

# Protecting for majority of distribution faults

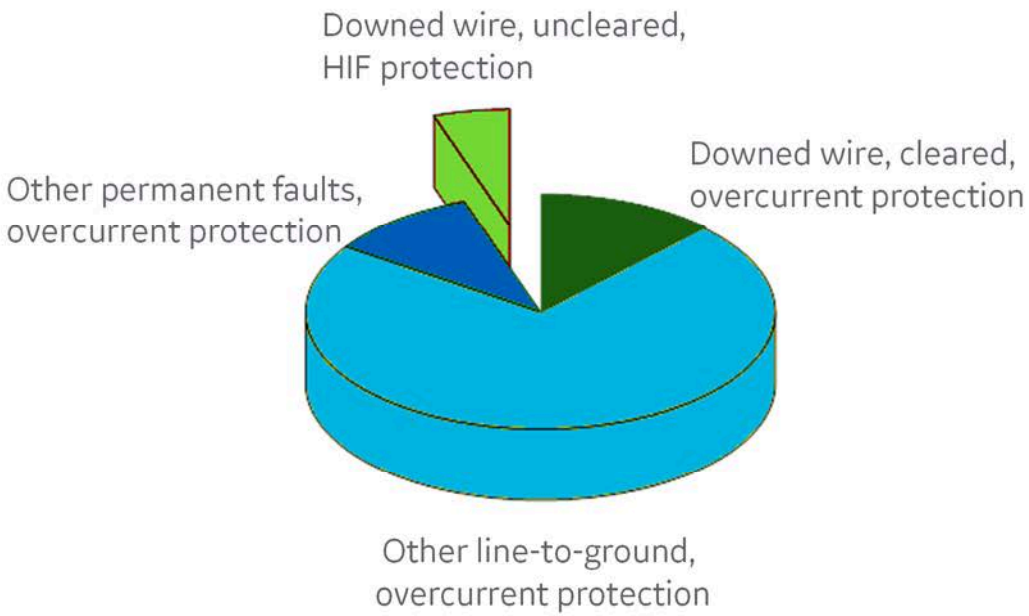

# High-impedance fault (HIF)

Energized conductor contacts quasi-insulating object

- Tree, pole
- Structure or ground

Hi-Z fault produces current levels of mA to 100 A

Not detected by fuses and conventional overcurrent

Little threat of damage to power system equipment, but is safety and fire hazard

Seldom documented on trouble reports

# Causes of Hi-Z faults—downed and broken conductors

## Downed conductor—intact wire touching ground and/or other objects

- Support failure
- Heavy-loading sag

## Broken conductor—current path interrupted

Downed conductor

Broken conductor

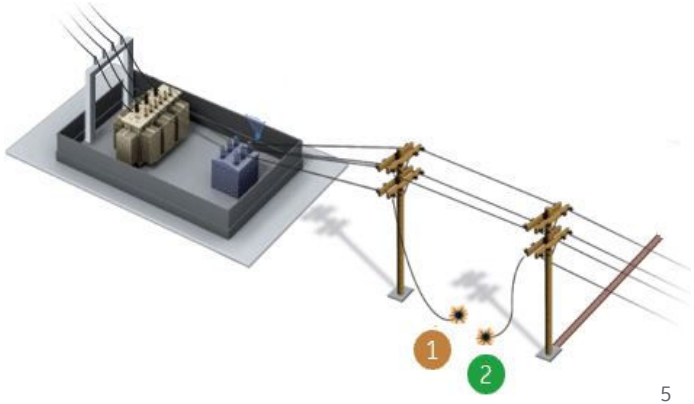

# HIF from weather, nature, and faulty equipment

Icing and broken limbs

Intermittent contact with tree limbs and other objects

Contaminated / failing equipment

- Disconnects
- Fuses
- Insulators

# Arcing faults and current

Ground-path resistance varies during arcing fault

Hi-Z arcing creates non-linearities

Non-linearities produce harmonics in current

# Fault arcing and currents on various surfaces

| Surface | Fault current (A) |
|---|---|
| Dry asphalt | 0 |
| Dry sand | 0 |
| Wet asphalt | 1 |
| Wet sand | 5 |
| Dry sod | 10 |
| Concrete (non-reinforced) | 10 |
| Wet sod | 50 |
| Concrete (reinforced) | 70 |

# Arcing time properties

HIF currents erratic—vary with time

Decrease because material burns

Can stop completely after minutes

HIF persist from seconds to minutes; sometimes for days!

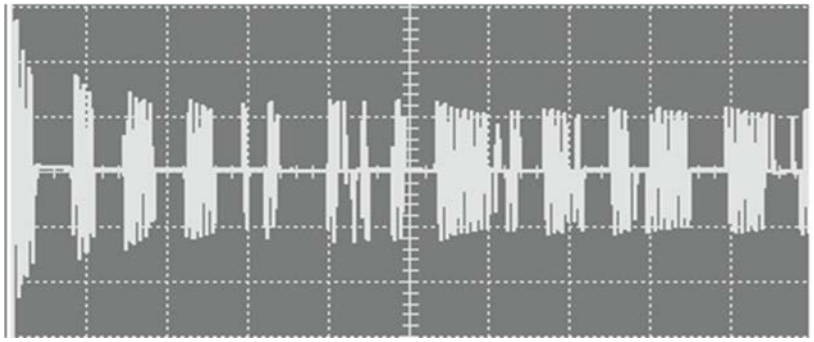

# HIF detection must ignore normal conditions

Immune to false positive / misoperations

Noisy loads on feeders

Arc furnaces / welders

Capacitor switching

Line switching

Load-tap changing

Technique can evaluate and subtract load from arcing

# Importance of HIF detection

Undetected, live, downed conductors can be fatal to public and line crews

Hi-Z faults arc and cause fires

Line failure leads to power outages and loss of production

HIFs cost utilities liabilities and service problems

# Techniques for HIF detection

# Broken-conductor detection

Established technique (does not detect arcing)

Broken phase causes unbalanced current

Typical settings

- I2/I1 > 20%—for overcoming 10% standing unbalance
- Long delay, approximately 60 s—for coordination

Single relay limited success

Networked PMUs promising good, system-wide detection and fire prevention—high-speed, falling-conductor protection (HFCP)

# Modern techniques analyze arcing

Arcing analysis—time domain and frequency domain

Measure increments, not absolute values

Load analysis / pattern recognition

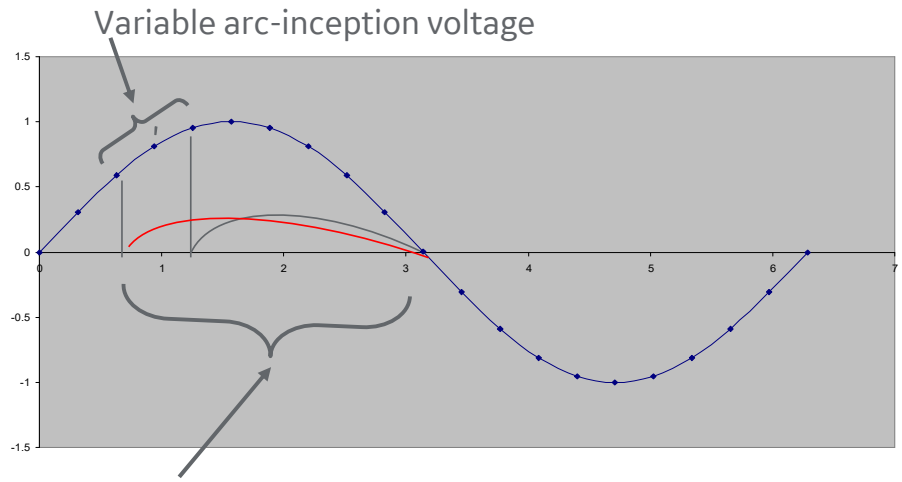

# Two methods using distribution equipment

Solutions use existing CT and PT inputs to relays

Methods work for solidly, resistance, and Petersen-coil grounded

# Method P

Method P employs core-balance (zero-sequence) CT

Process separately fundamental analysis (FA) and component-harmonics analysis (CHA)

Uses voltage for power calculation, to determine direction (DIR)

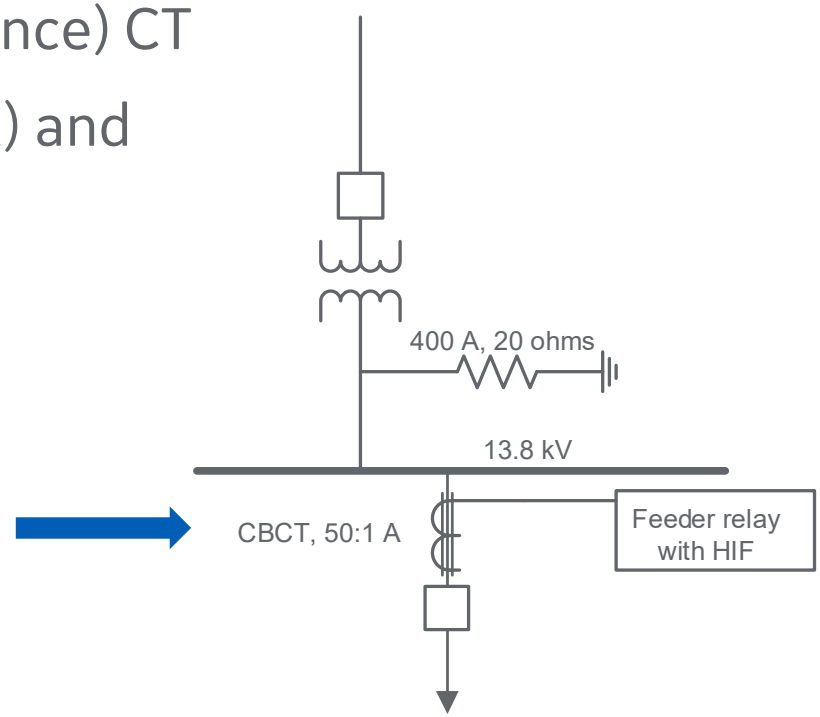

# Method F

## Method F special analog-input module

- Amplifies phase and residual currents
- Monitors load on phase currents

## Checks voltage for phase identification and restraint

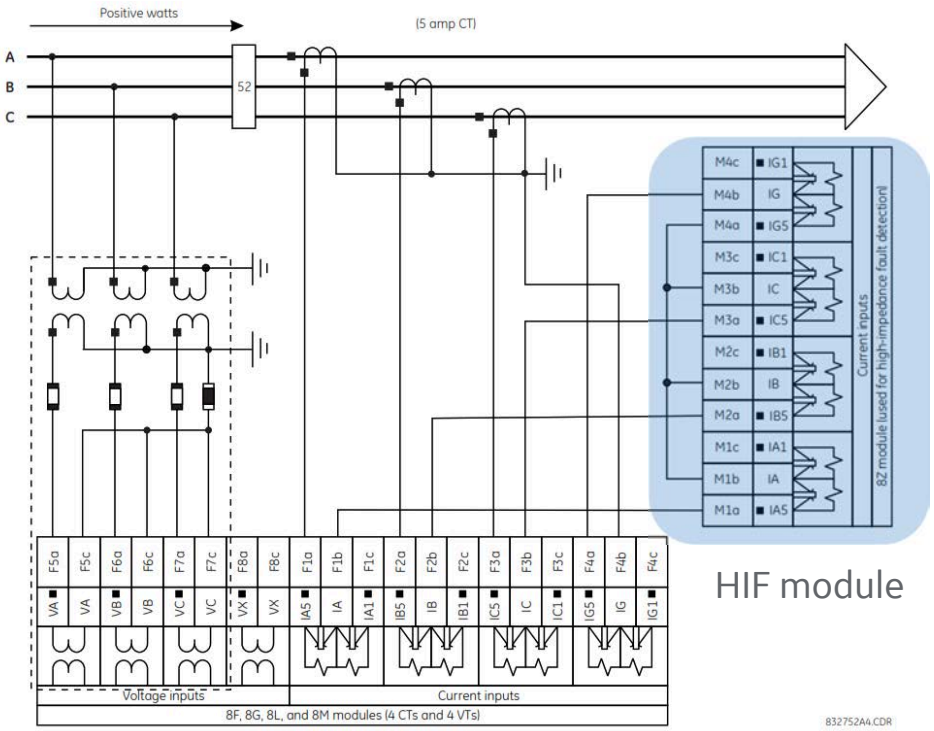


HIF module

# Method P: FA and CHA

# Method P techniques

## Fundamental analysis (FA)

- Detects intermittent nature and random increments in current amplitude
- Employs counters and timers

## Harmonic analysis (CHA)

- 3rd and 5th harmonic component
- Detects periodic distortions at zero crossing

## Directional analysis (DIR)

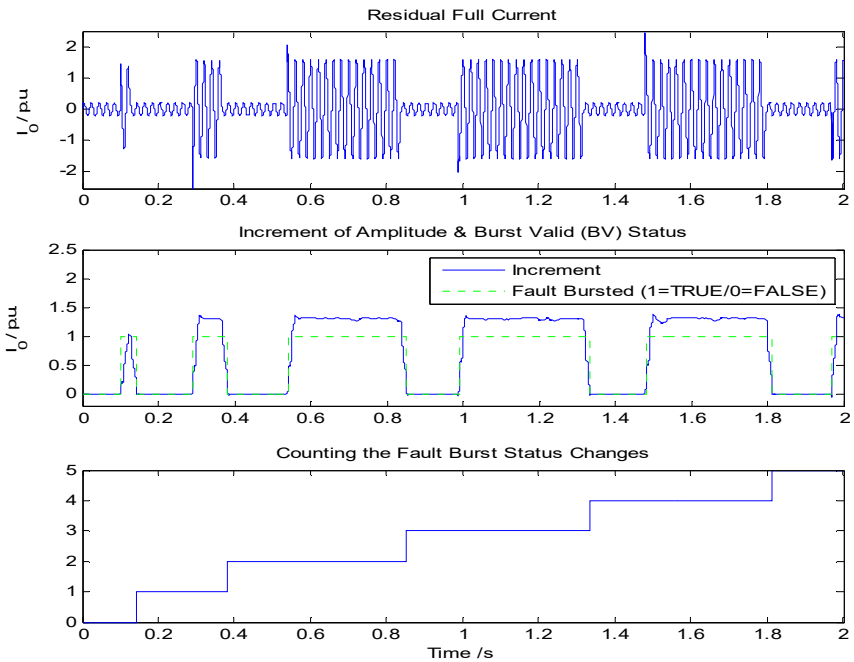

# Method P block diagram

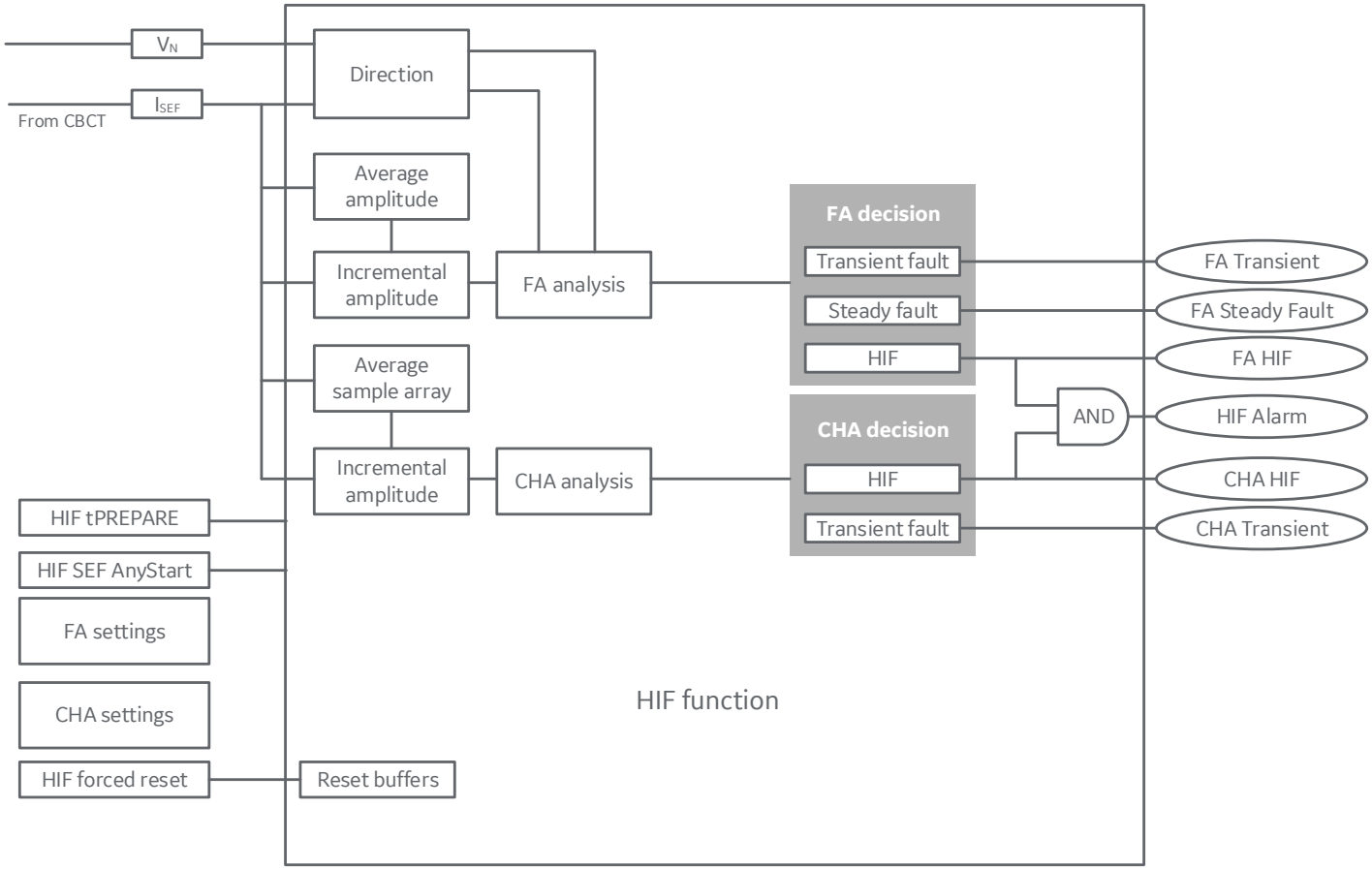

# Fundamental Analysis (FA)

Sensitive, residual-current measurement

Input from core-balance CT (zero-sequence CT)

Looks for change in magnitude produced by current bursts

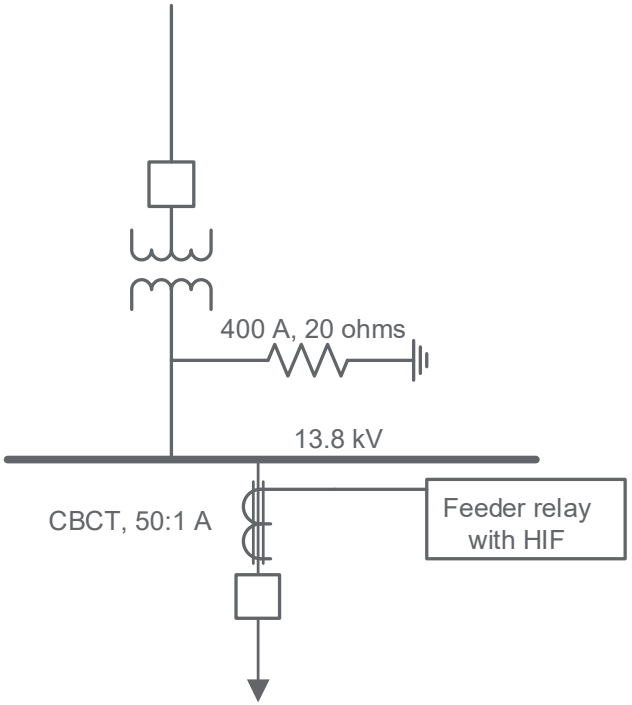

# Current bursts in time window

HIF: intensive bursts;
FA detects possible HIF

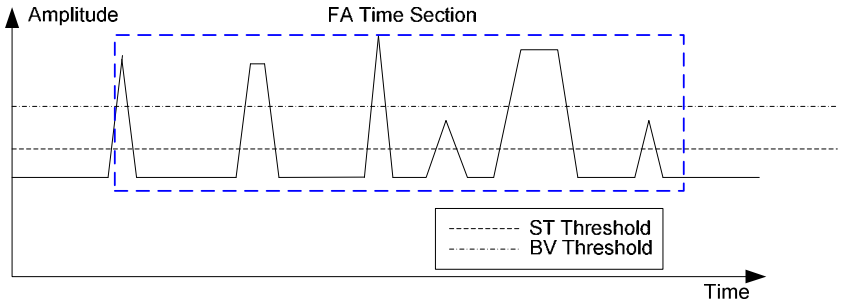


Transient: insufficient bursts;
need further sections of FA

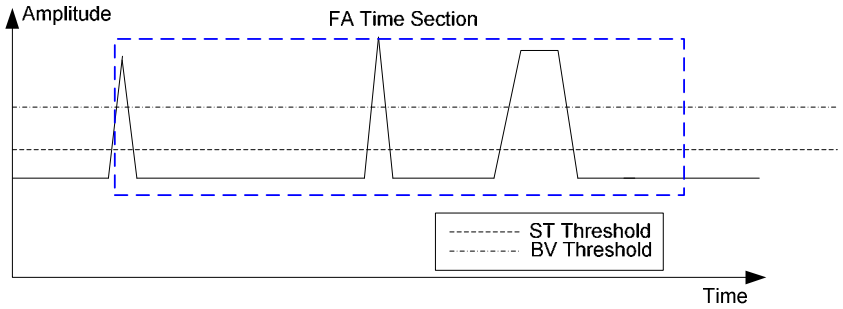


Transient event needs further sections for HIF determination

# Component harmonic analysis (CHA) detection criteria

## Satisfied State

- Ratio 3rd/5th harmonic / fundamental exceeds threshold
- Phase difference 3rd/5th harmonic / fundamental close to 180°

## Lasts for significant time in Satisfied State

## Reports HIF or Transient event

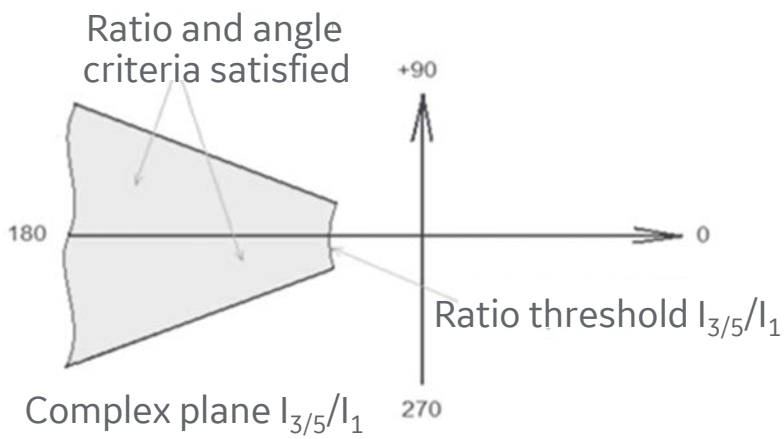

# Directional analysis (DIR)

Direction helps resistance grounded, Petersen coil, and isolated systems

Arcing transients dispersed along faulted and healthy lines via distributed capacitances

Instantaneous (not phasor) power at fault determines direction

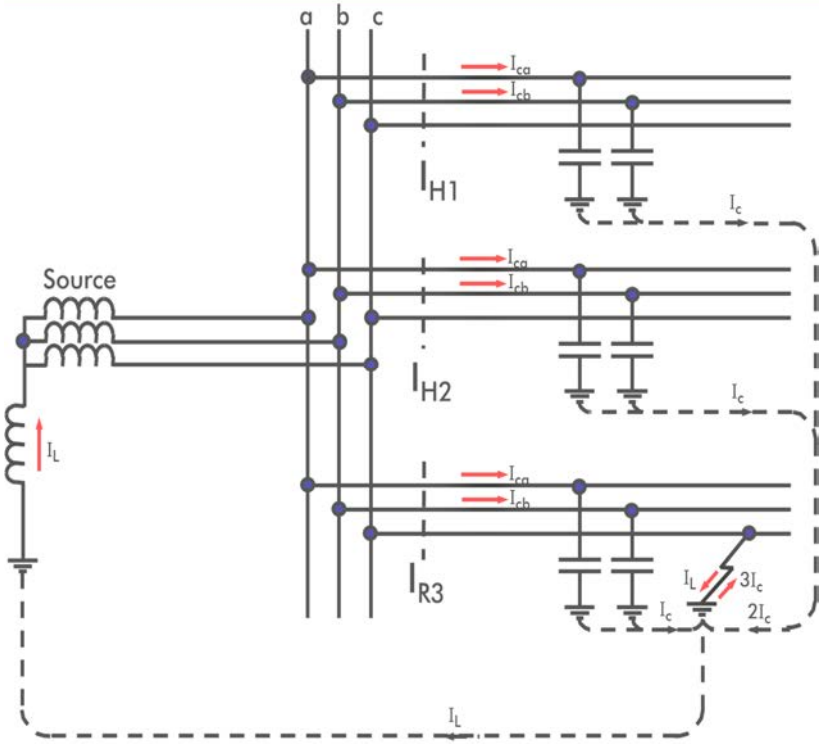

# DIR determines faulted line

Resistance-grounded and isolated—reactive power direction

Petersen coil—active power

FA counts only forward transients

| | Resistor in neutral | | Petersen coil in neutral | | Isolated | |
|---|---|---|---|---|---|---|
| | Faulted line | Healthy line | Faulted line | Healthy line | Faulted line | Healthy line |
| **P** | Rev | Fwd | Rev | Fwd | Rev | Fwd |
| **Q** | Fwd | Rev | – | – | Fwd | Rev |

# Method P recommendations

## Select HIF solution according to system grounding

| | Solid | Resistor | Petersen coil | Isolated |
|---|---|---|---|---|
| FA and DIR (active, P) | Yes | Yes | Recommended | Yes |
| FA and DIR (reactive, Q) | Yes | Recommended | No | Recommended |
| FA (no DIR) | Recommended | No | No | No |
| CHA | Recommended | Recommended | No | No |

# Staged, downed-conductor testing in desert

13.8-kV feeder

Source is resistance grounded

50:1 core-balance CT feeds relay

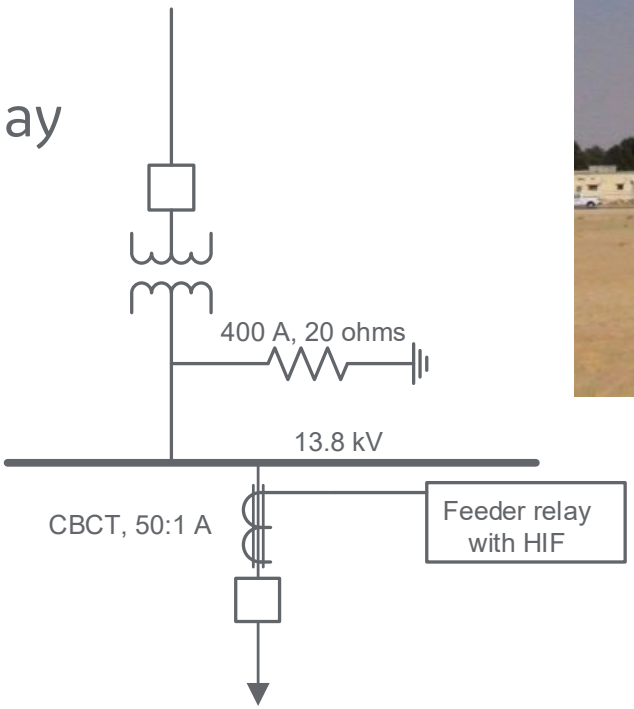

Line and bucket truck

# Rocky sand

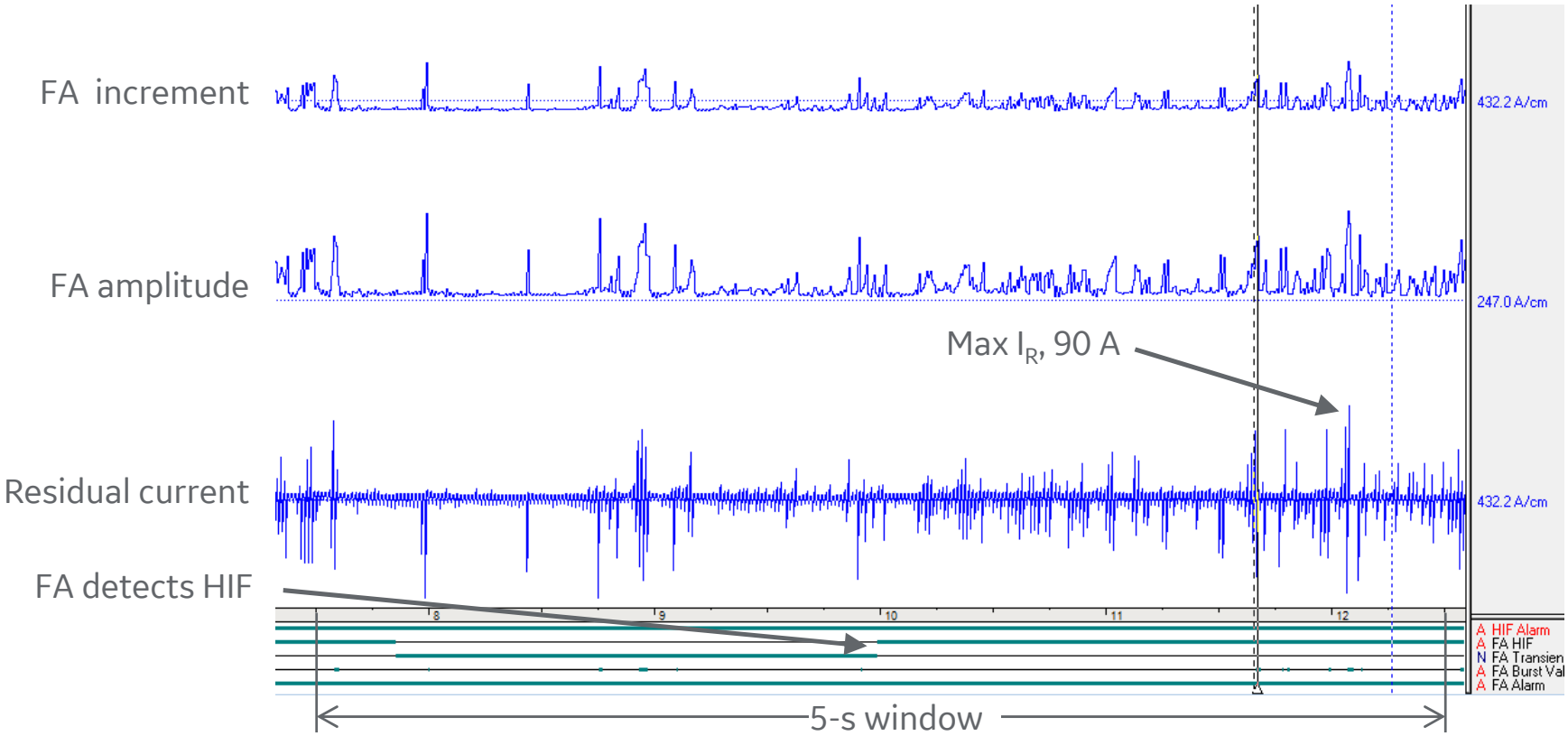
FA increment
FA amplitude
Residual current
FA detects HIF
432.2 A/cm
247.0 A/cm
432.2 A/cm
Max $I_R$, 90 A
8
9
10
11
12
A HIF Alarm
A FA HIF
N FA Transien
A FA Burst Val
A FA Alarm
5-s window

# Rocky-sand waveform detail

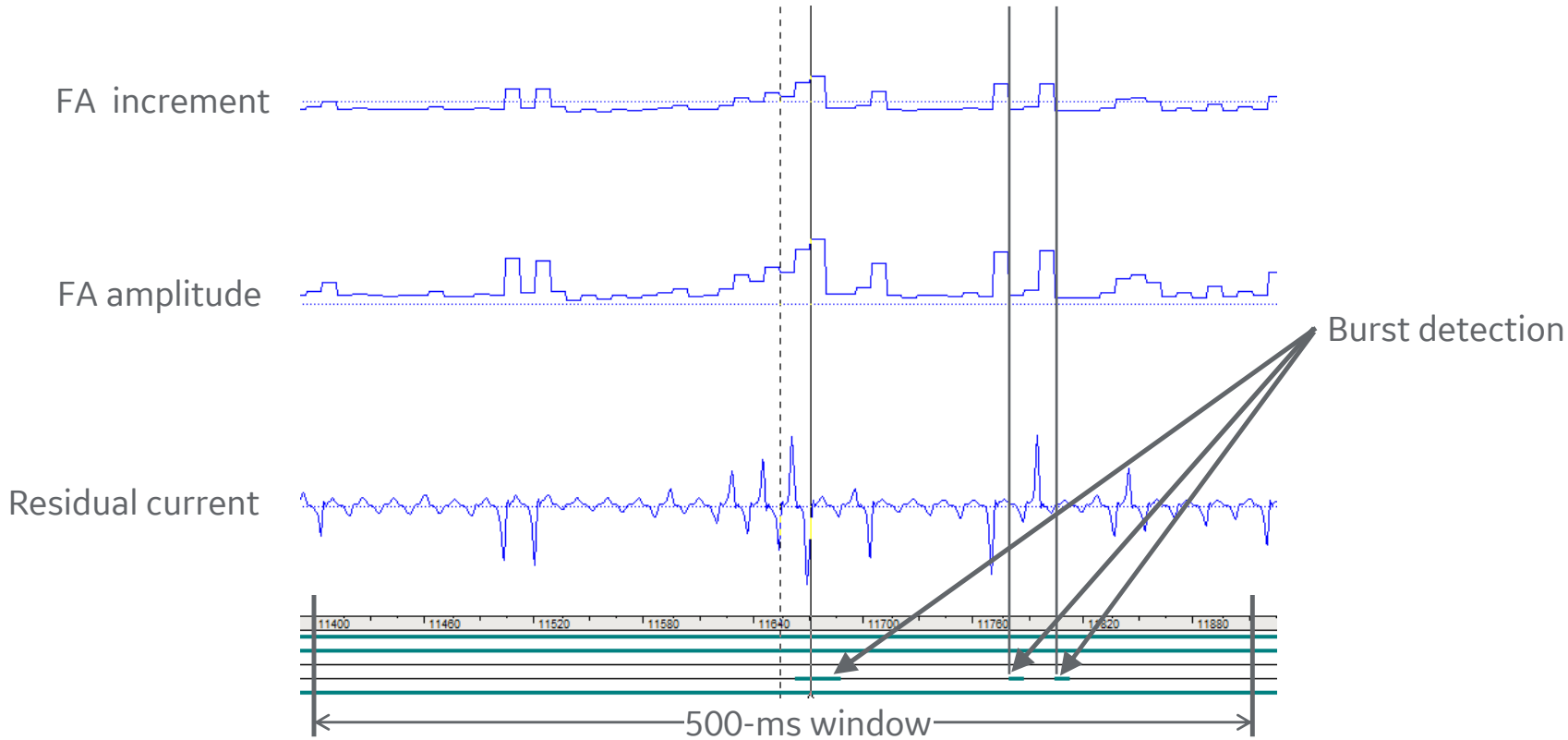

# Rocky-sand CHA detection

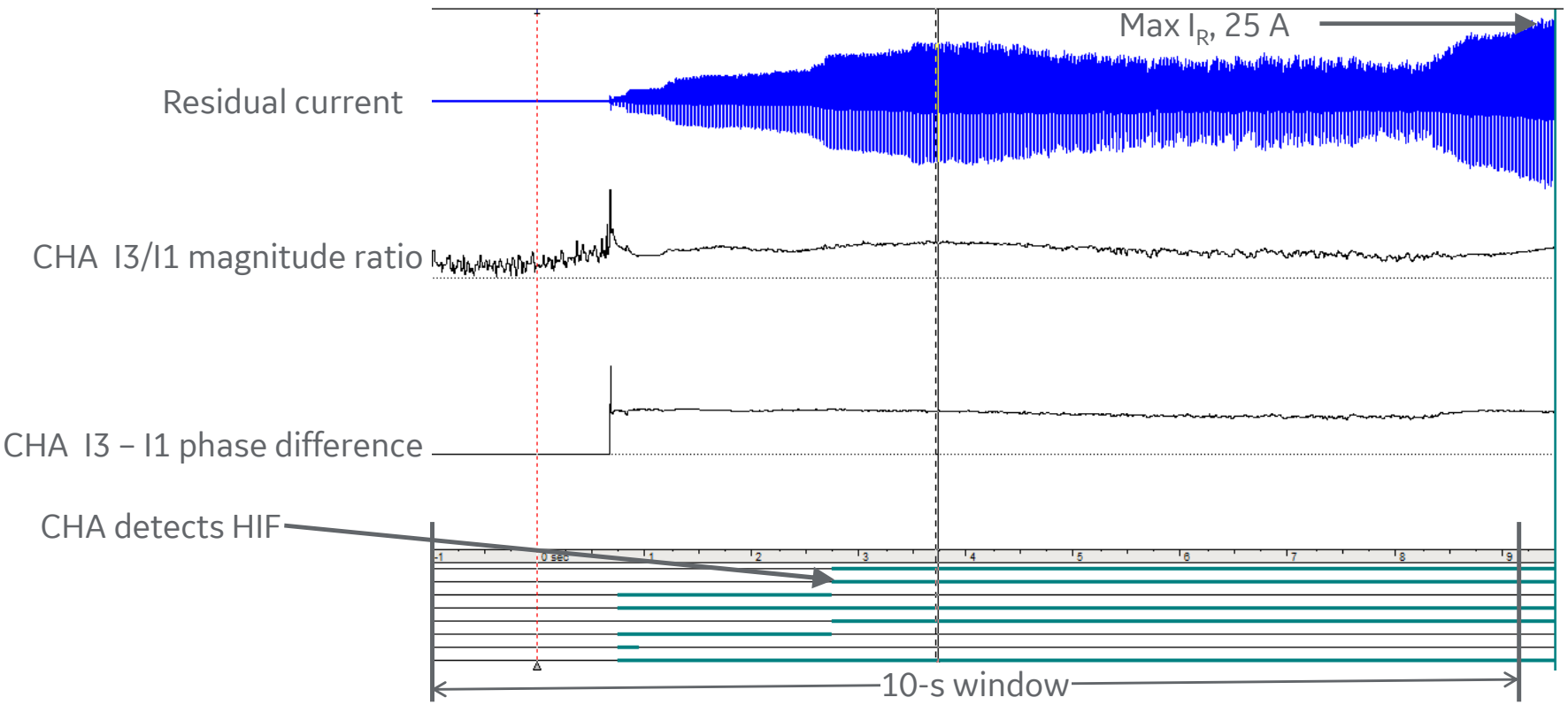

# Asphalt current level too small

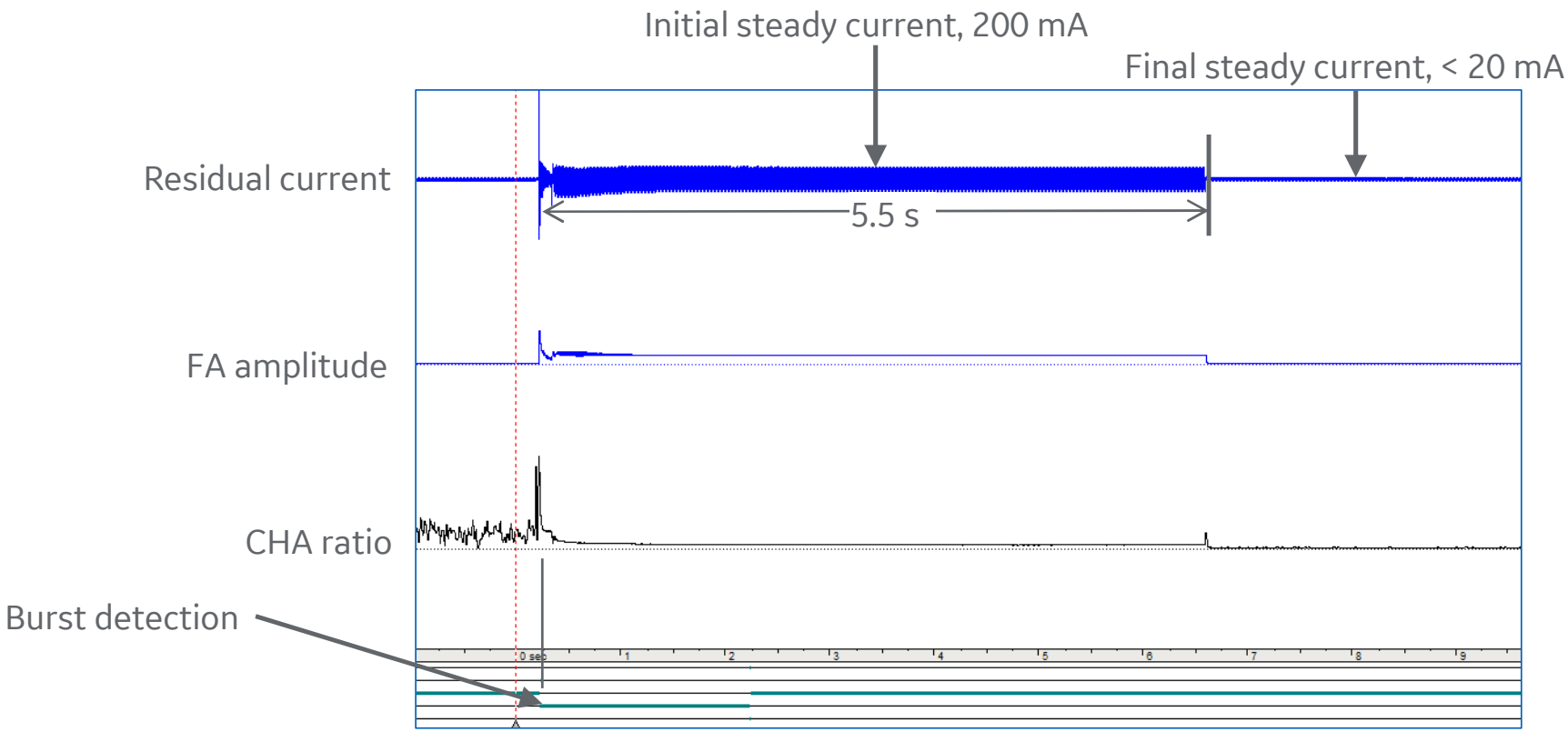

# Method F

# Method F processes

Monitor and learn power-system nominal behavior

Detect arcing

Determine whether arc persists over time

Analyze load current at beginning of fault

Declare downed conductor, considering fast load loss ond O/C condition

Settings tune dependability and security

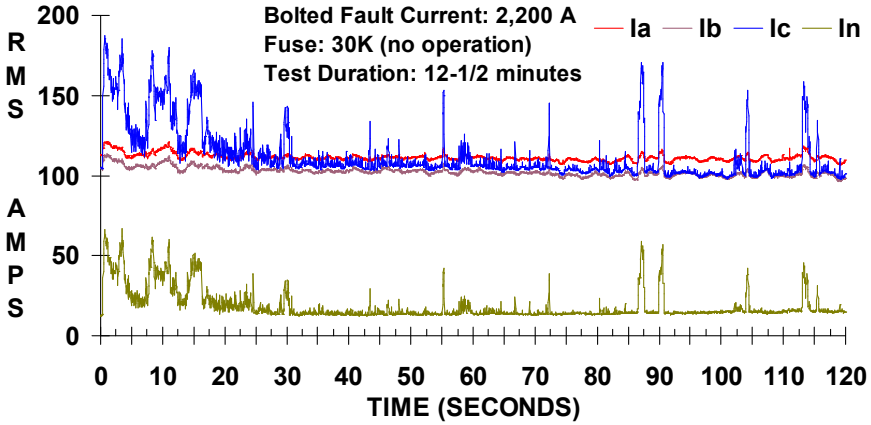

# Method F outputs

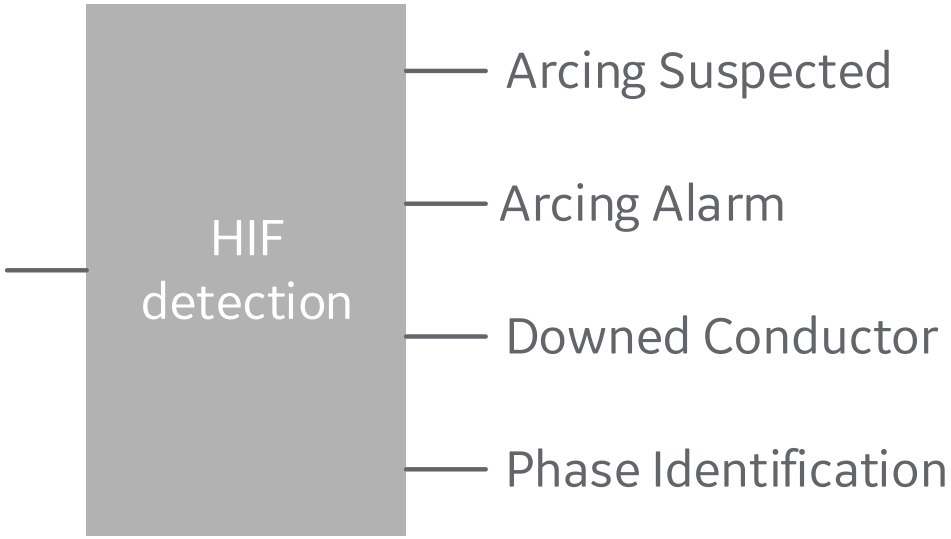

# Method F has many parts

Energy algorithm

Randomness algorithm

Expert arc-detector (EAD) algorithm

Load-event detector

Load analysis

Load extraction

Arc-burst-pattern analysis

Spectral analysis

Arcing-suspected identifier

Even-harmonic restraint

Voltage supervision

# Simplified block diagram

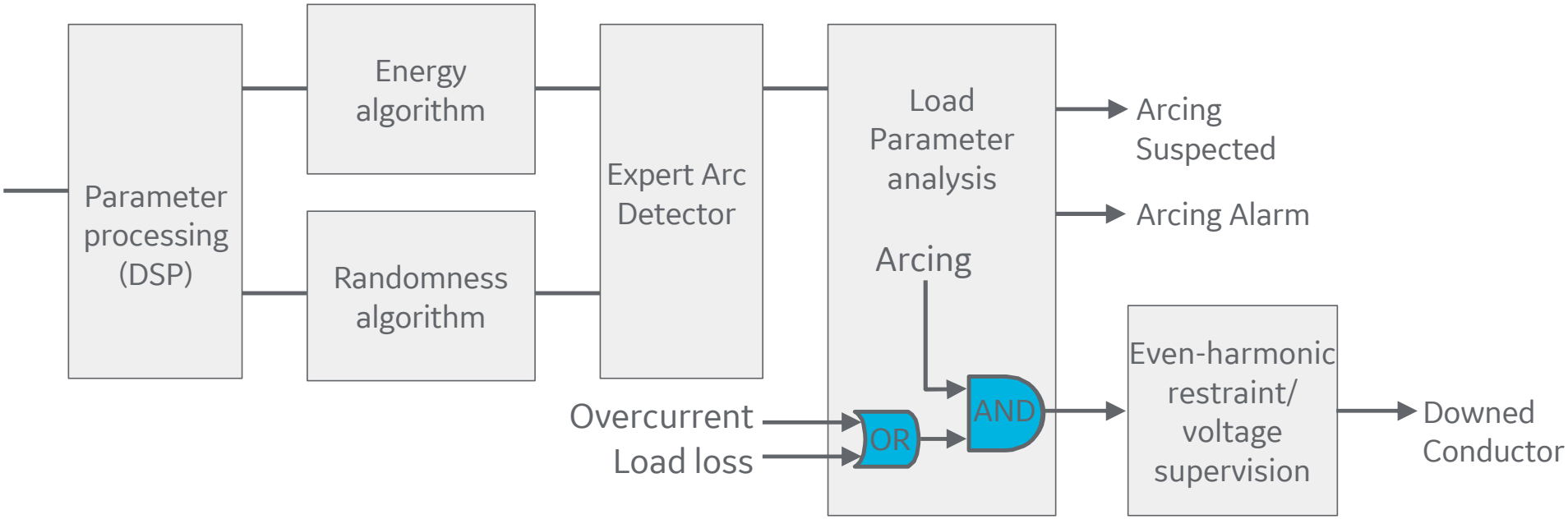

# Detailed, Method F, HIF detection diagram

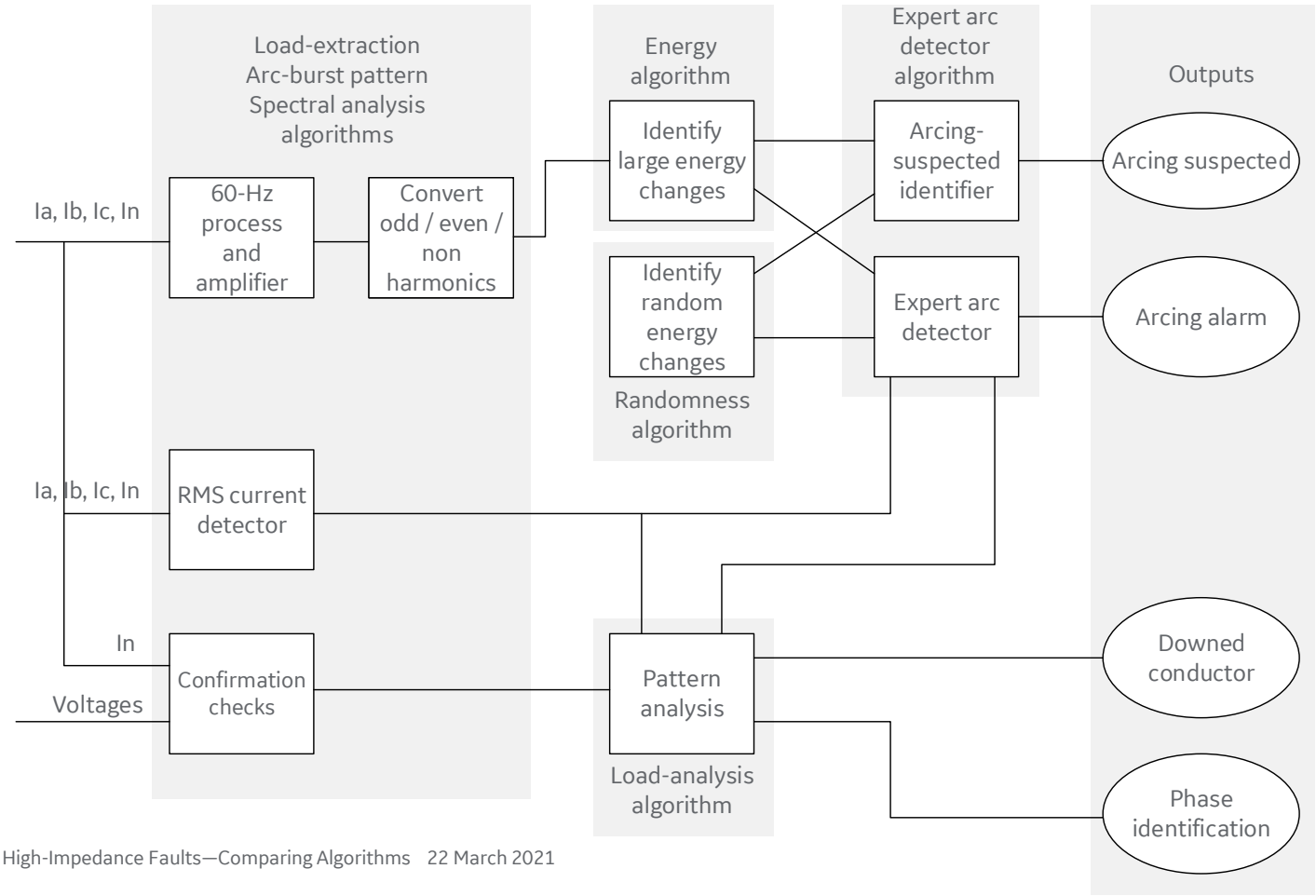

# Avoid nuisance outputs

Use RMS measurements, not instantaneous values

Measure increments, not absolute values

Adapt to changing conditions / loads

Secure with even-harmonic restraint and voltage supervision

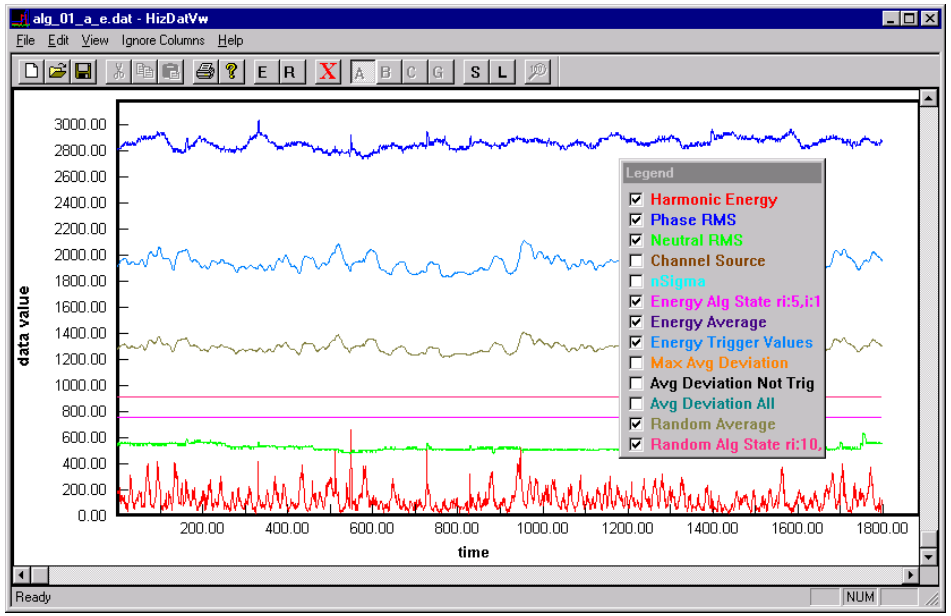

# Declaring downed conductor

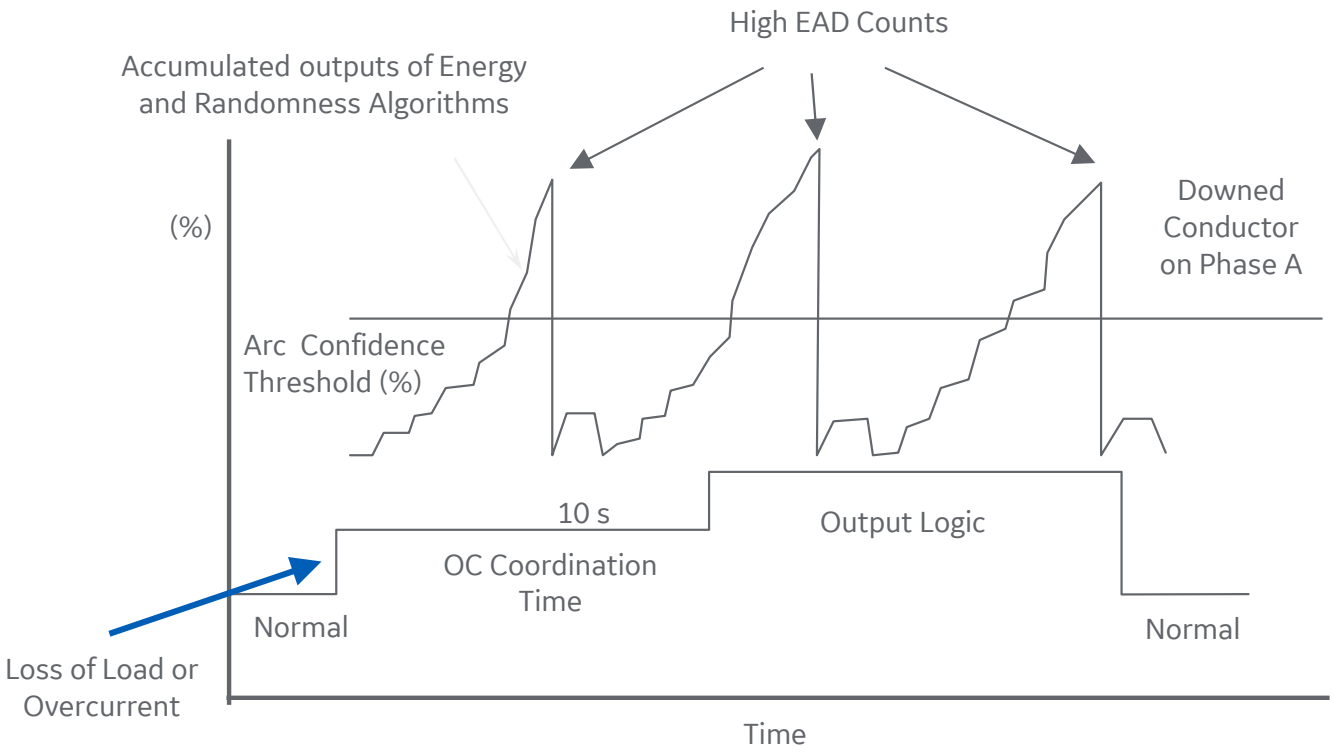

# Sporadic arcing is not downed conductor

Arcing present and not persistent

- Tree limb
- Insulator degradation

Sporadic arcing with long periods of inactivity

Method F HIF element notifies “Arcing Suspected”

Investigate

# Method F summary

Arcing registers bursts of energy throughout phase- / neutral-current frequency spectrum

Algorithms detect patterns in harmonic current waveforms (odd, even, and non-harmonics)

Multiple algorithm outputs feed Expert Arc Detector

Arcing Suspected: intermittent arcing

Downed Conductor: arcing initiated by loss-of-load or overcurrent condition when conductor breaks

Arcing Alarm: arcing without loss-of-load or overcurrent condition indicates bad insulator / tree or other object on intact conductor

# Testing

Line-drop testing

Pepco results:  relay identifies 82% of HIF downed conductors

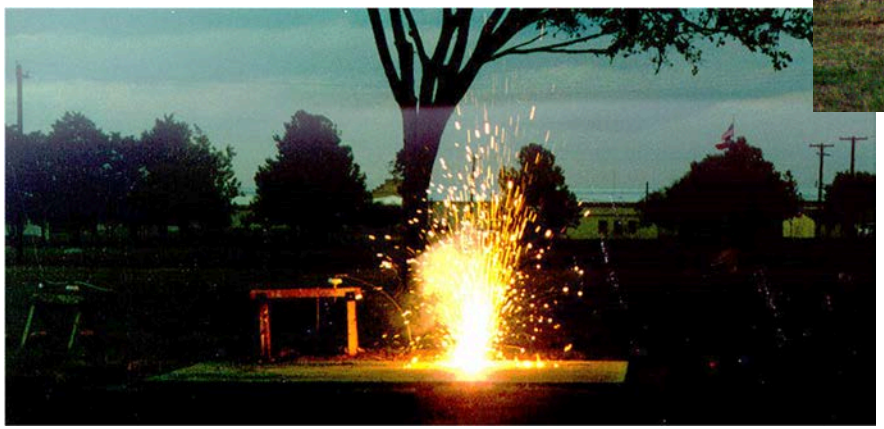

# Method comparisons

# Common to methods

Sample differences

Set arcing-level reference

Recognize arcing pattern

Employ counters for security

Determine direction

Outputs for arcing:  Transient / Arcing Suspected

Outputs for high-impedance fault:  HIF / Downed Conductor

# Differences in methods

Connections

Sampling rate

Spectrum coverage

Arcing-level reference

Arc-burst pattern analysis

Load-event detection

Load learning and extraction

Voltage supervision / even-harmonic restraint

# Overview of methods

| Feature / Method | Method F | Method P | Comments |
|---|---|---|---|
| **Connection** | Phase / residual | Zero-sequence / (CB) CT | |
| **Difference (incremental) currents** | Yes, 64 samples/cycle | Yes, 24 samples/cycle | Greater sampling rate catches fast transients |
| **Spectrum monitor** | Harmonics and non-harmonics to 780 Hz | 3rd and 5th only | Process arcing frequency spectrum |
| **Arcing-level reference** | 72 hours | Average recent samples | Ignore normal line noise and activity |
| **Randomness algorithm** | x | x | Quantify sudden, erratic changes |
| **Counters, trending, and memory** | x | x | Build certainty over time |
| **Arc-burst pattern analysis** | x | | Identify faulted phase |
| **Load-event detection** | x | | Block HIF for power-system events |
| **Load learning and extraction** | x | | Remove normal load |
| **Voltage supervision** | x | | Limit false alarms (adds security) |
| **Directional analysis** | logic | x | Isolates faulted line |
| **Decision logic** | Arcing suspected, Arcing alarm, Downed conductor | Transient suspicion, alarm— for FA and CHA | Provide action outputs |

# Implementation strategies

# Consider tradeoffs

HIF protection primarily for safety

Review circuit—conventional protection adequate?

Considerations

- Soil conditions
- Circuit construction
- Experience
- Nature of load
- Weather

# HIF-based feeder sectionalizing

Coordination via settings and communication

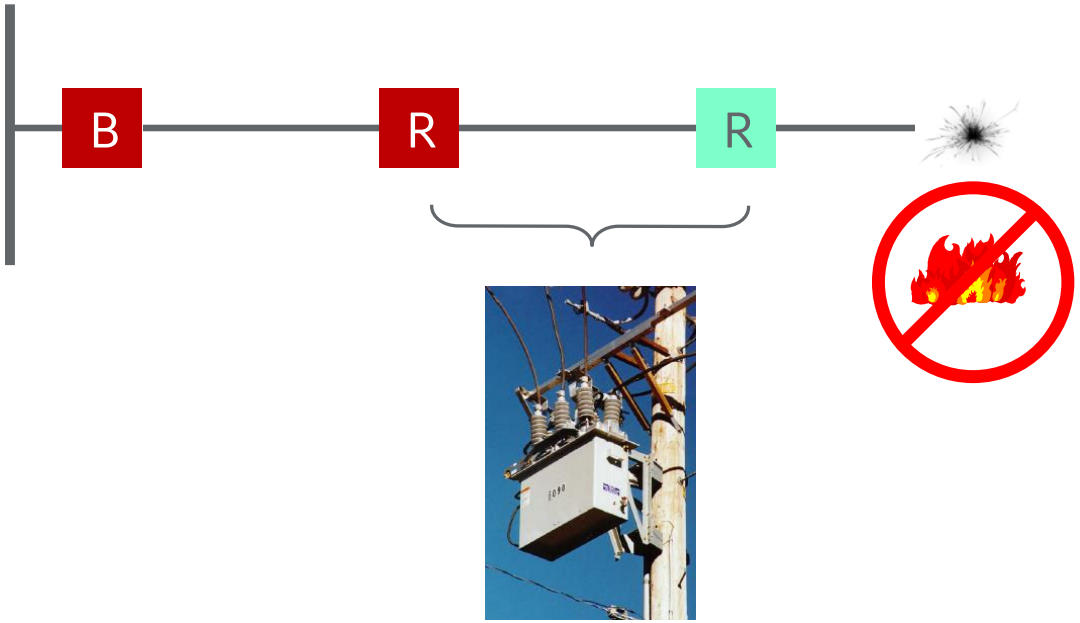

# Considerations for alarm / trip

Delayed tripping promotes power continuity

## Case for tripping

- Danger to human and animal life
- Prevents wildfires and property damage
- Limits legal liability and litigation

## Case for alarm only

- Impact on supply continuity
- Small current is low risk of damage to assets
- Likelihood of unwanted trips
- Faults downstream of fuses and close to end of feeders difficult to identify

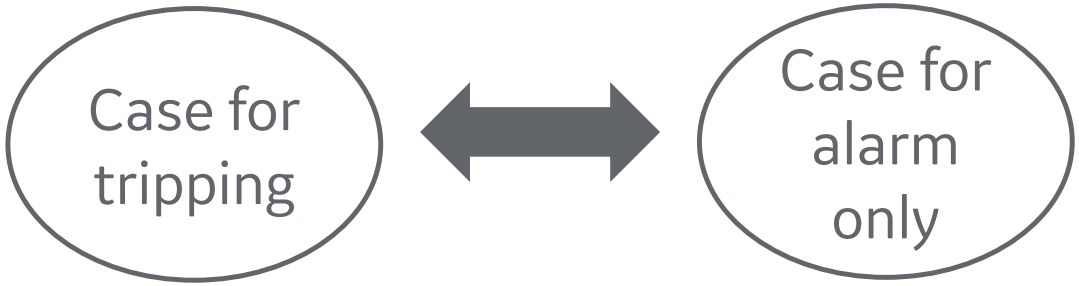

# Conclusions

Special techniques detect high-impedance faults

HIF methods identify significant percent of Hi-Z faults

HIF protection prevents fires and increases safety

# Conclusions, cont.

## Common to methods

- Arcing sense and level set
- Counts and other security measures
- Outputs:  arcing suspected and downed conductor

## Method differences

- Connections
- Spectrum / harmonics
- Load subtraction

## Testing and experience improves application effectiveness

# Questions?