OMICRON

# Impact of IEC 61850 Edition 2 on the Object Modeling of Complex Multifunctional Protection IEDs

Dr. Alexander Apostolov

March 2021

Texas A&M, Texas, US

# Questions

- What are we doing?
- Why are we doing it?
- How are we doing it?

# IEC 61850 Services

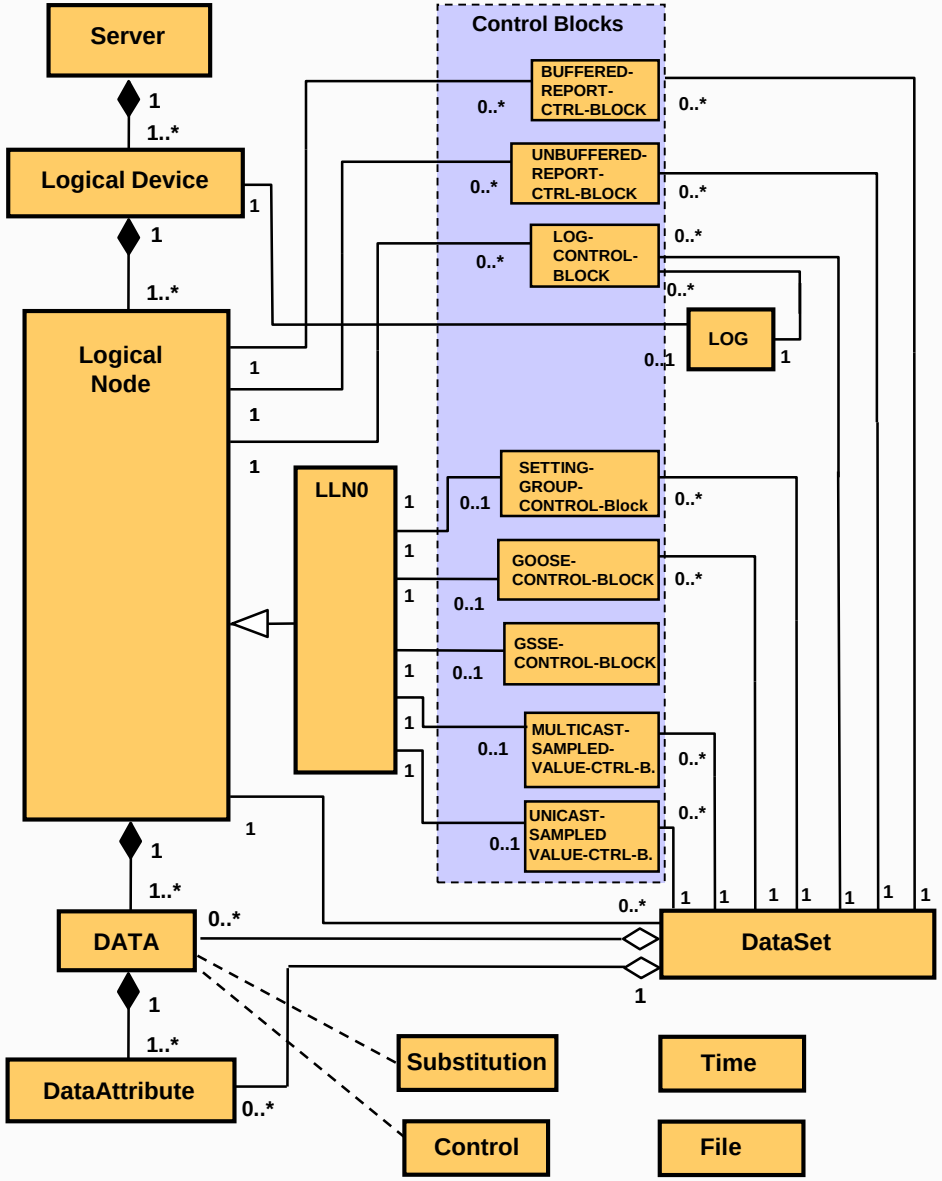

# LN groups

| Group indicator | Logical node groups |
|---|---|
| A | Automatic control |
| B | Reserved |
| C | Supervisory control |
| D | Distributed energy resources |
| E | Reserved |
| F | Functional blocks |
| G | Generic function references |
| H | Hydro power |
| I | Interfacing and archiving |
| J | Reserved |
| K[a] | Mechanical and non-electrical primary equipment |
| L | System logical nodes |
| M | Metering and measurement |
| N | Reserved |
| O | Reserved |
| P | Protection functions |
| Q | Power quality events detection related |
| R | Protection related functions |
| S | Supervision and monitoring |
| T[a] | Instrument transformer and sensors |
| U | Reserved |
| V | Reserved |
| W | Wind power |
| X[a] | Switchgear |
| Y[a] | Power transformer and related functions |
| Z[a] | Further (power system) equipment |

nerated from UML

# New LNs in IEC 61850, 61400-25

| | | | |
|---|---|---|---|
| ANCR | MSQI | PTUV | YPSH |
| ARCO | MSTA | PUPF | YPTR |
| ATCC | PDIF | PVOC | ZAXN |
| AVCO | PDIR | PVPH | ZBAT |
| CALH | PDIS | PZSU | ZBSH |
| CCGR | PDOP | RADR | ZCAB |
| CILO | PDUP | RBDR | ZCAP |
| CLN | PFRC | RBRF | ZCON |
| CPOW | PHAR | RDIR | ZGEN |
| CSWI | PHIZ | RDRE | ZGIL |
| GAPC | PIOC | RDRS | ZLIN |
| GGIO | PM[illegible] | [illegible] | ZMOT |
| GSAL | PM[illegible] | RP[illegible] | ZREA |
| IARC | PO[illegible] | [illegible] | ZRRC |
| IHMI | PPAM | RSYN | ZSAR |
| ITCI | PSCH | SARC | ZTCF |
| ITMI | PSDE | SIMG | ZTCR |
| LLN0 | PTEF | SIML | |
| LPHD | PTOC | SPDC | |
| MDIF | PTOF | TCTR | |
| MHAI | PTOV | TVTR | |
| MHAN | PTRC | XCBR | |
| MMTR | PTTR | XSWI | |
| MMXN | PTUC | YEFN | |
| MMXU | PTUF | YLTC | |

92

| | | | | | | | | | |
|---|---|---|---|---|---|---|---|---|---|
| ANCR | DPST | GAPC | ISAF | MMDC | PTEF | RDRS | TLEV | WTOW | ZREA |
| ARCO | DPVA | GGIO | ITCI | MMET | PTHF | RFLO | TLVL | WTRF | ZRES |
| ARIS | DPVC | GLOG | ITMI | MMTN | PTOC | RMXU | TMGF | WTRM | ZRRC |
| ATCC | DPVM | GSAL | ITPC | MMTR | PTOF | RPSB | TMVM | WTUR | ZSAR |
| AVCO | DRAT | HBRG | KFAN | MMXN | PTOV | RREC | TPOS | WYAW | ZSCR |
| CALH | DRAZ | HCOM | KFIL | MMXU | PTRC | RSYN | TPRS | XCBR | ZSMC |
| CCGR | DRCC | HDAM | KPMP | MPRS | PTTR | SARC | TRTN | XFUS | ZTCF |
| CILO | DRCS | HDLS | KTNK | MSQI | PTUC | SCBR | TSND | XSWI | ZTCR |
| CPOW | DRCT | HGPI | KVLV | MSTA | PTUF | SIMG | TTMP | YEFN | |
| CSWI | DREX | HGTE | LCCH | PDIF | PTUV | SIML | TTNS | YLTC | |
| CSYN | DSCC | HITG | LGOS | PDIR | PUPF | SLTC | TVBR | YPSH | |
| DCCT | DSCH | HJCL | LLN0 | [illegible] | PV[illegible] | SOPM | TVTR | YPTR | |
| DCHB | DSFC | HLKG | LPHD | [illegible]OP[illegible] | PVP[illegible] | SPDC | TWPH | ZAXN | |
| DCHC | DSTK | HLVL | LSVS | [illegible] | PZ[illegible] | SPTR | WALG | ZBAT | |
| DCIP | DTRC | HMBR | LTIM | PFRC | QFVR | SSWI | WALM | ZBSH | |
| DCRP | FCNT | HNDL | LTMS | PHAR | QITR | STMP | WAPC | ZBTC | |
| DCTS | FCSD | HNHD | LTRK | PHIZ | QIUB | SVBR | WCNV | ZCAB | |
| DEXC | FFIL | HOTP | MENV | PIOC | QVTR | TANG | WCON | ZCAP | |
| DFCL | FLIM | HRES | MFLK | PMRI | QVUB | TAXD | WGEN | ZCON | |
| DFLV | FPID | HSEQ | MFLW | PMSS | QVVR | TCTR | WMET | ZGEN | |
| DFPM | FRMP | HSPD | MFUL | POPF | RADR | TDST | WNAC | ZGIL | |
| DGEN | FSEQ | HUNT | MHAI | PPAM | RBDR | TFLW | WREP | ZINV | |
| DOPA | FSPT | HWCL | MHAN | PRTR | RBRF | TFRQ | WROT | ZLIN | |
| DOPM | FXOT | IARC | MHET | PSCH | RDIR | TGSN | WRPC | ZMOT | |
| DOPR | FXUT | IHMI | MHYD | PSDE | RDRE | THUM | WSLG | ZRCT | |

233

# Functions Decomposition

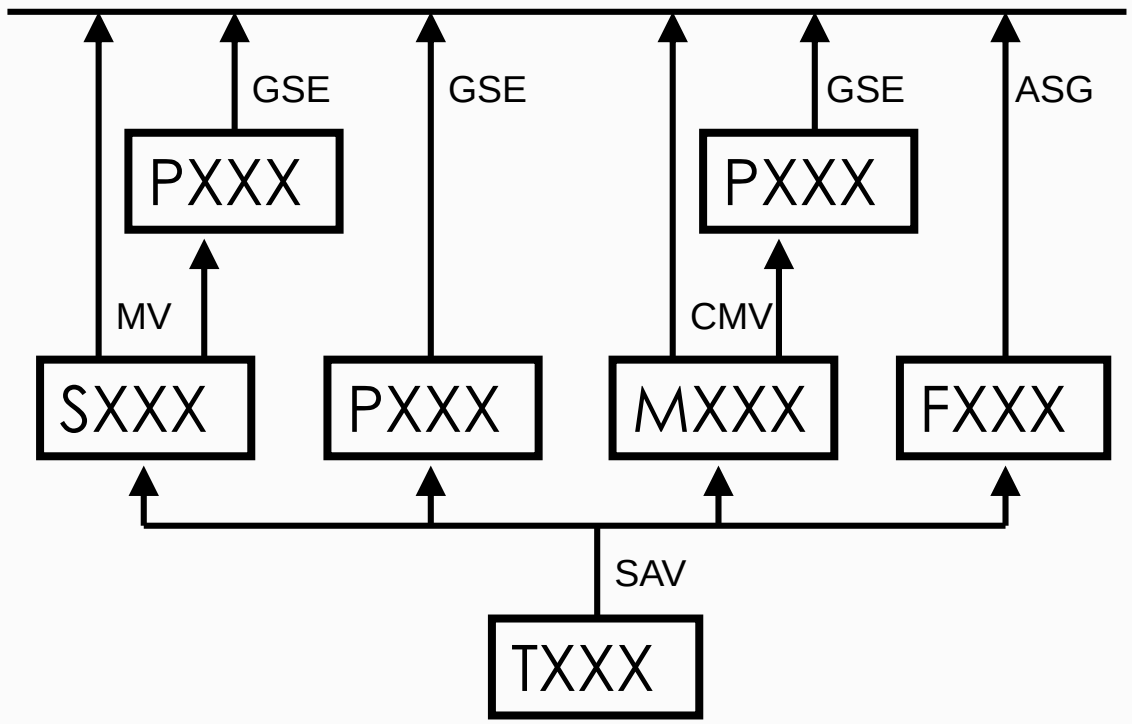

# Class diagram LNs::LN Groups

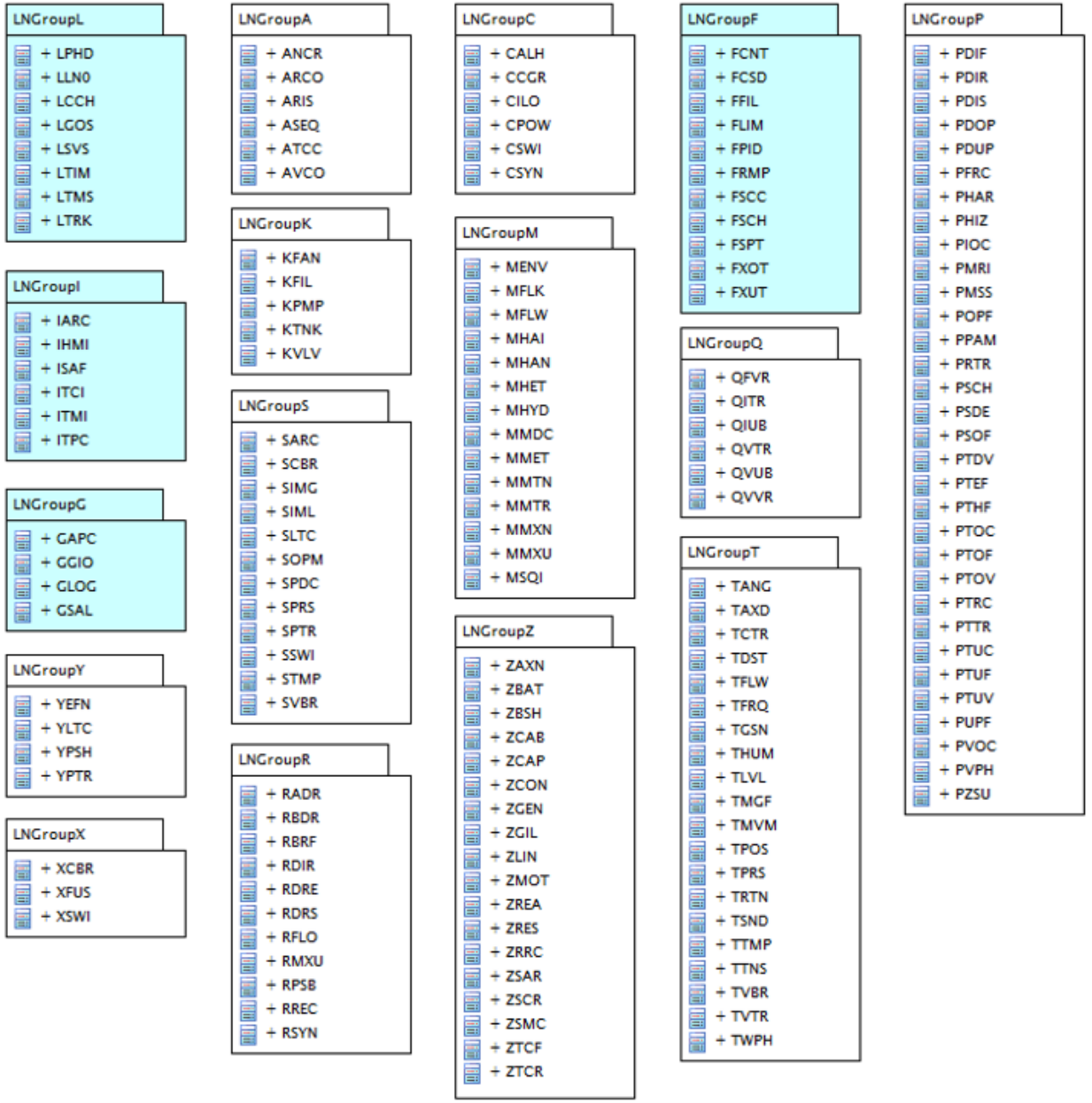

# Sensors LNs

- Angle sensor  Name: TANG
- Axial displacement sensor  Name: TAXD
- Current transformer  Name: TCTR
- Distance sensor  Name: TDST
- Liquid flow sensor  Name: TFLW
- Frequency sensor  Name: TFRQ
- Generic sensor  Name: TGSN
- Humidity sensor  Name: THUM

# Sensors LNs

- Media level sensor  Name: TLVL
- Magnetic field sensor  Name: TMGF
- Movement sensor  Name: TMVM
- Position indicator  Name: TPOS
- Pressure sensor  Name: TPRS
- Rotation transmitter  Name: TRTN
- Sound pressure sensor  Name: TSND

# Sensors LNs

- Sound pressure sensor  Name: TSND
- Temperature sensor  Name: TTMP
- Mechanical tension / stress sensor  Name: TTNS
- Vibration sensor  Name: TVBR
- Voltage transformer  Name: TVTR
- Water acidity sensor  Name: TWPH

# Functions in a Protection IED



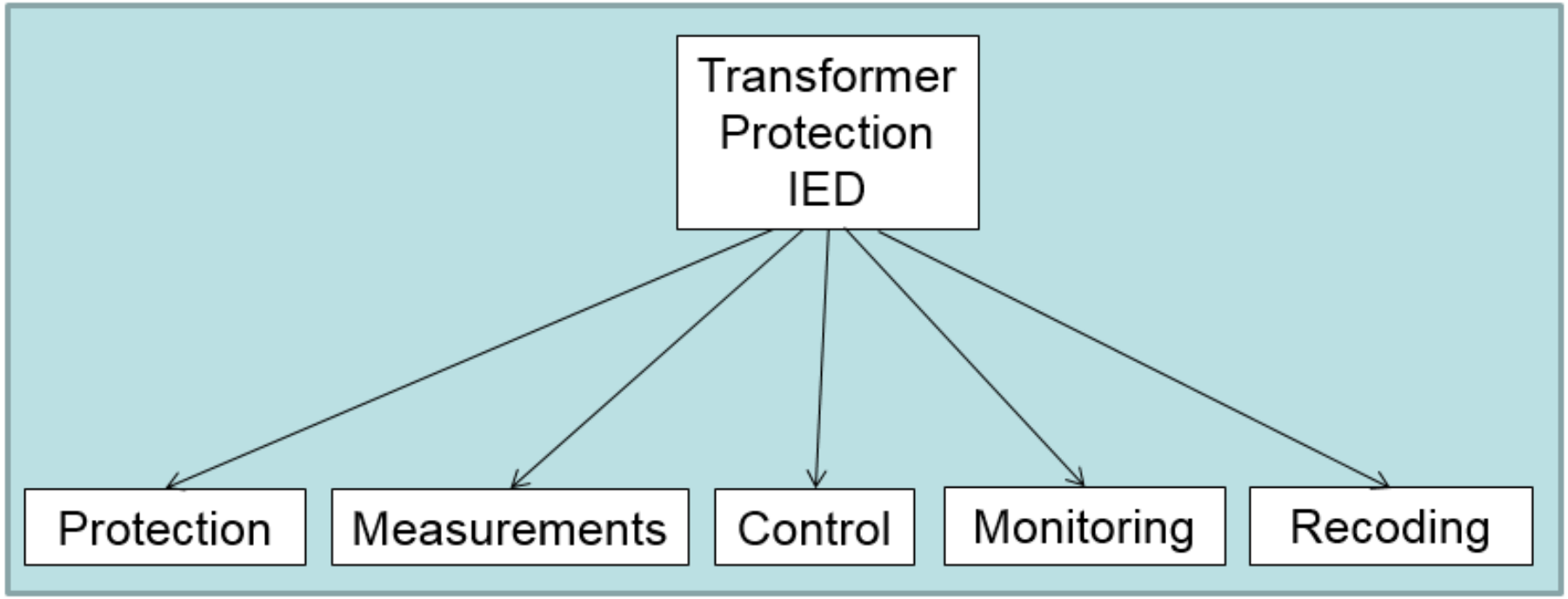

# Abstract Function Model Hierarchy

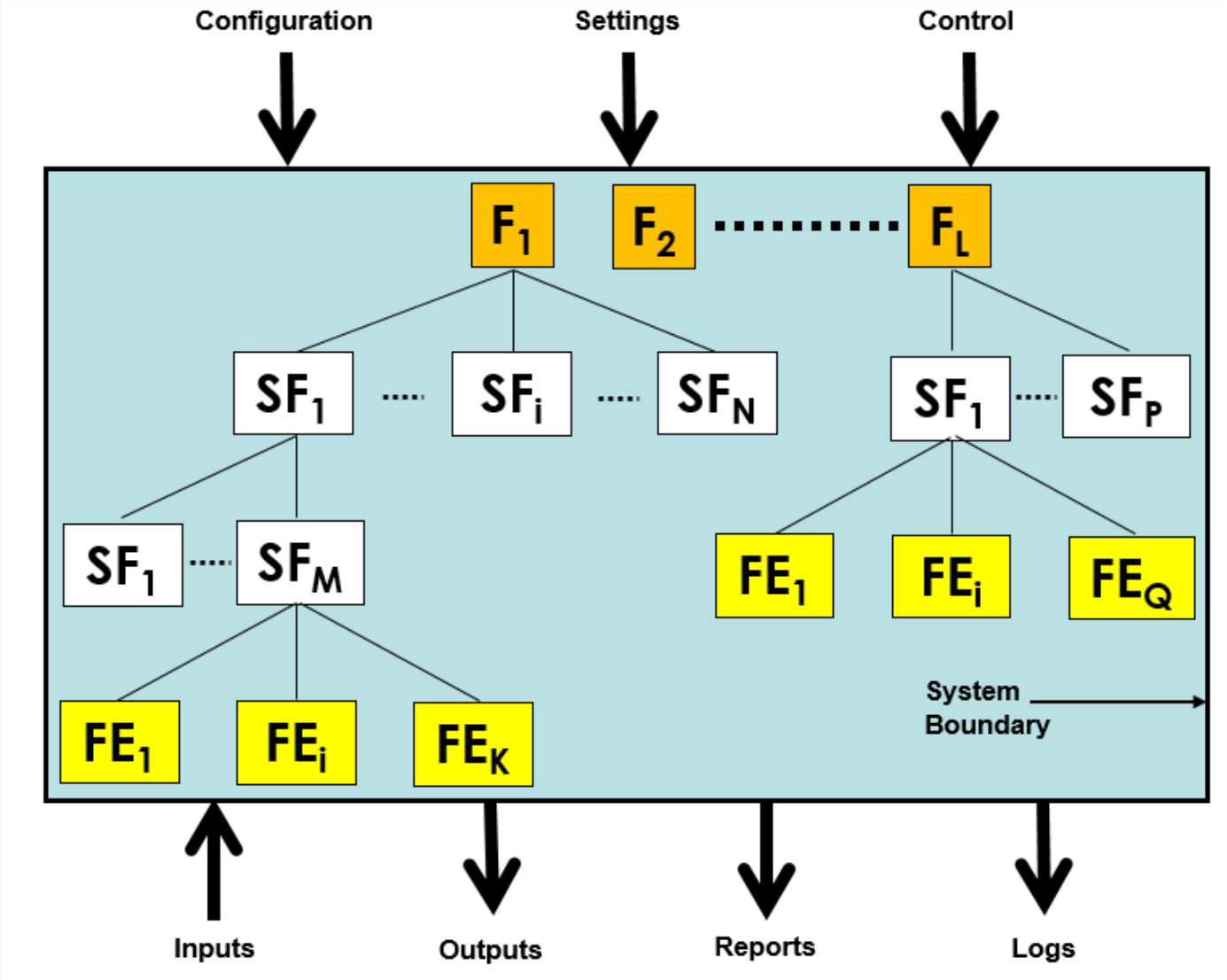

# Abstract functional hierarchy

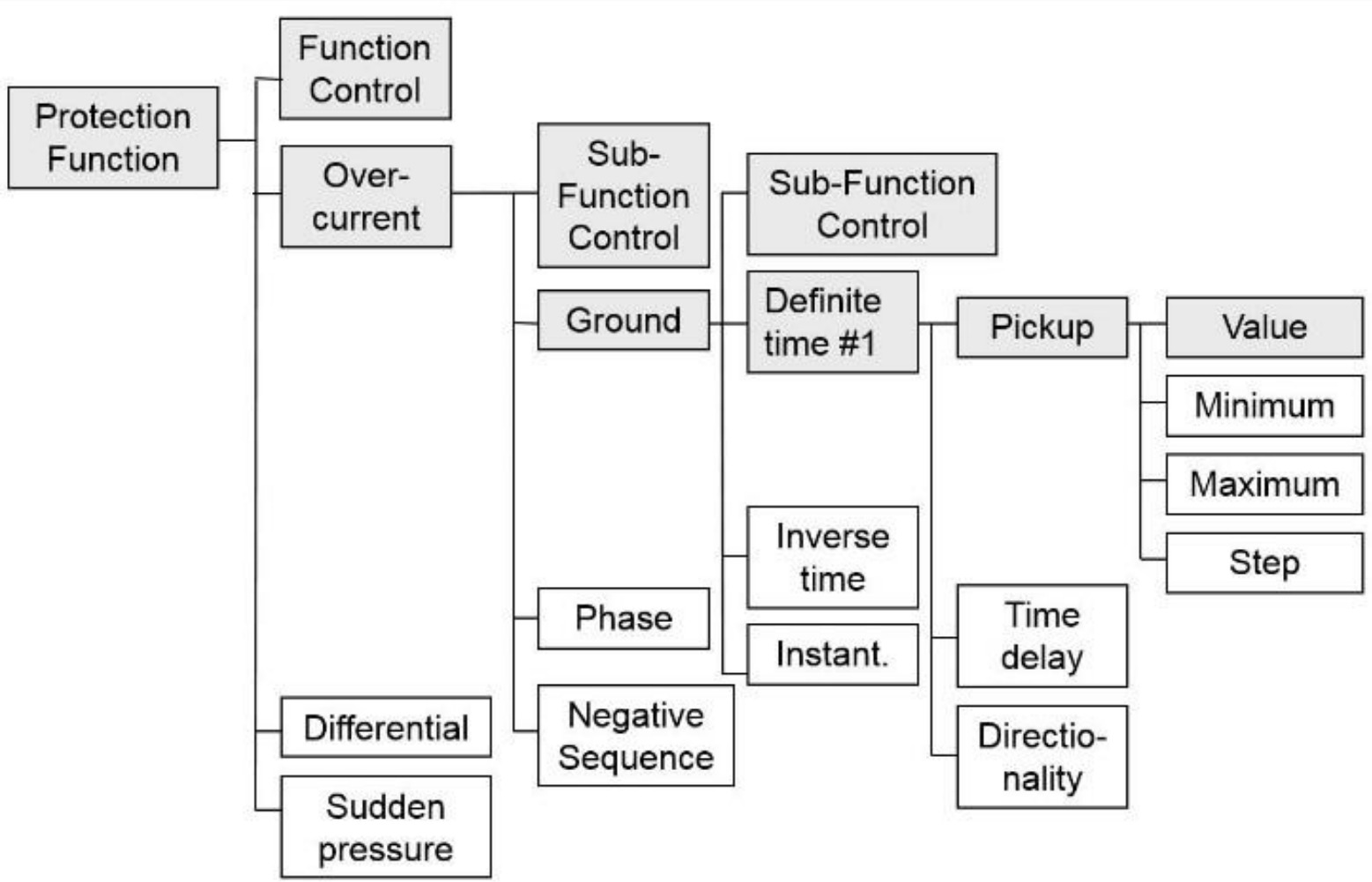

# Multifunctional IED Object Model



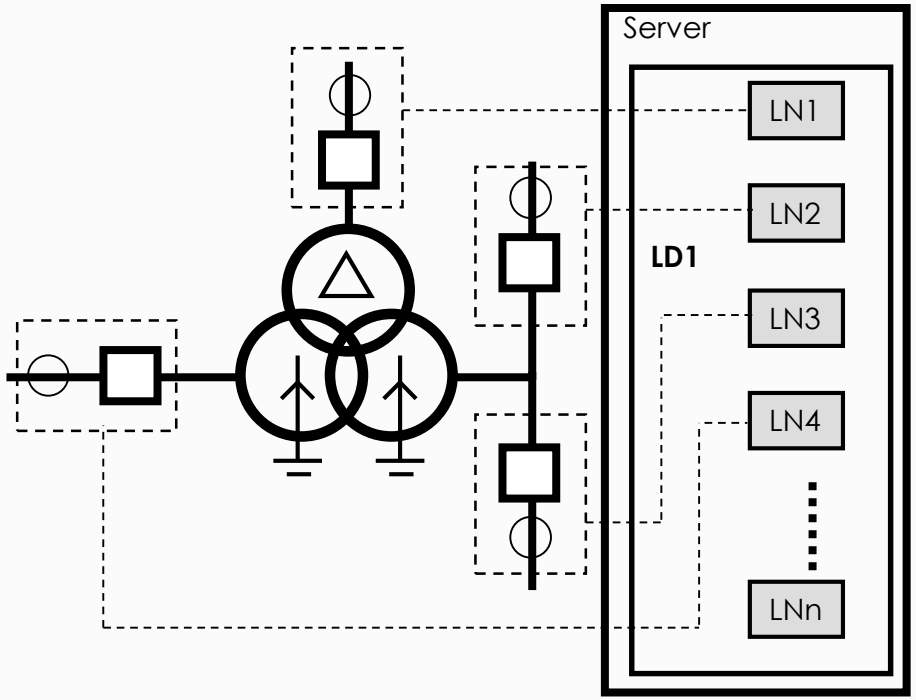

# Multifunctional IED Object Model

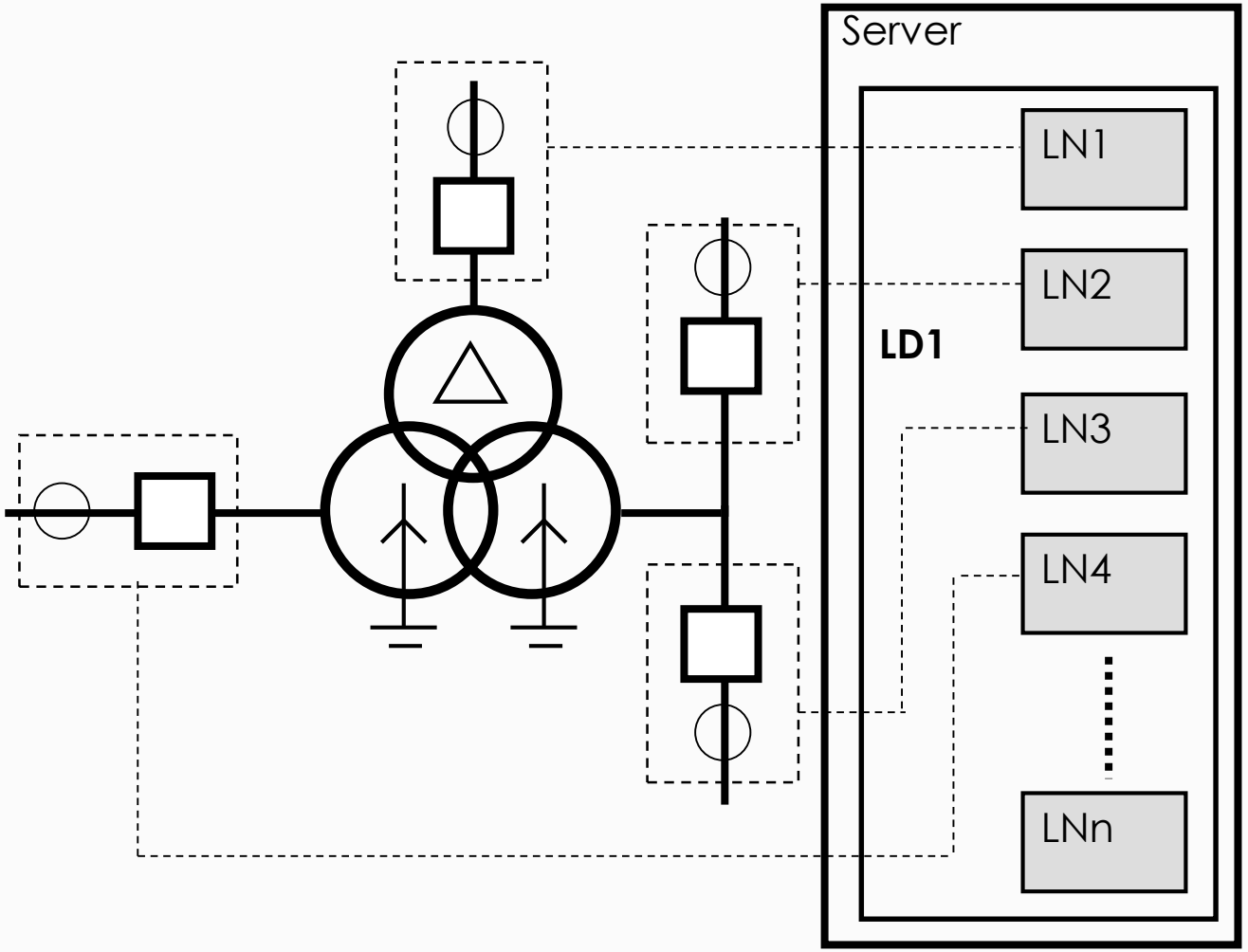

# Multifunctional IED Object Model

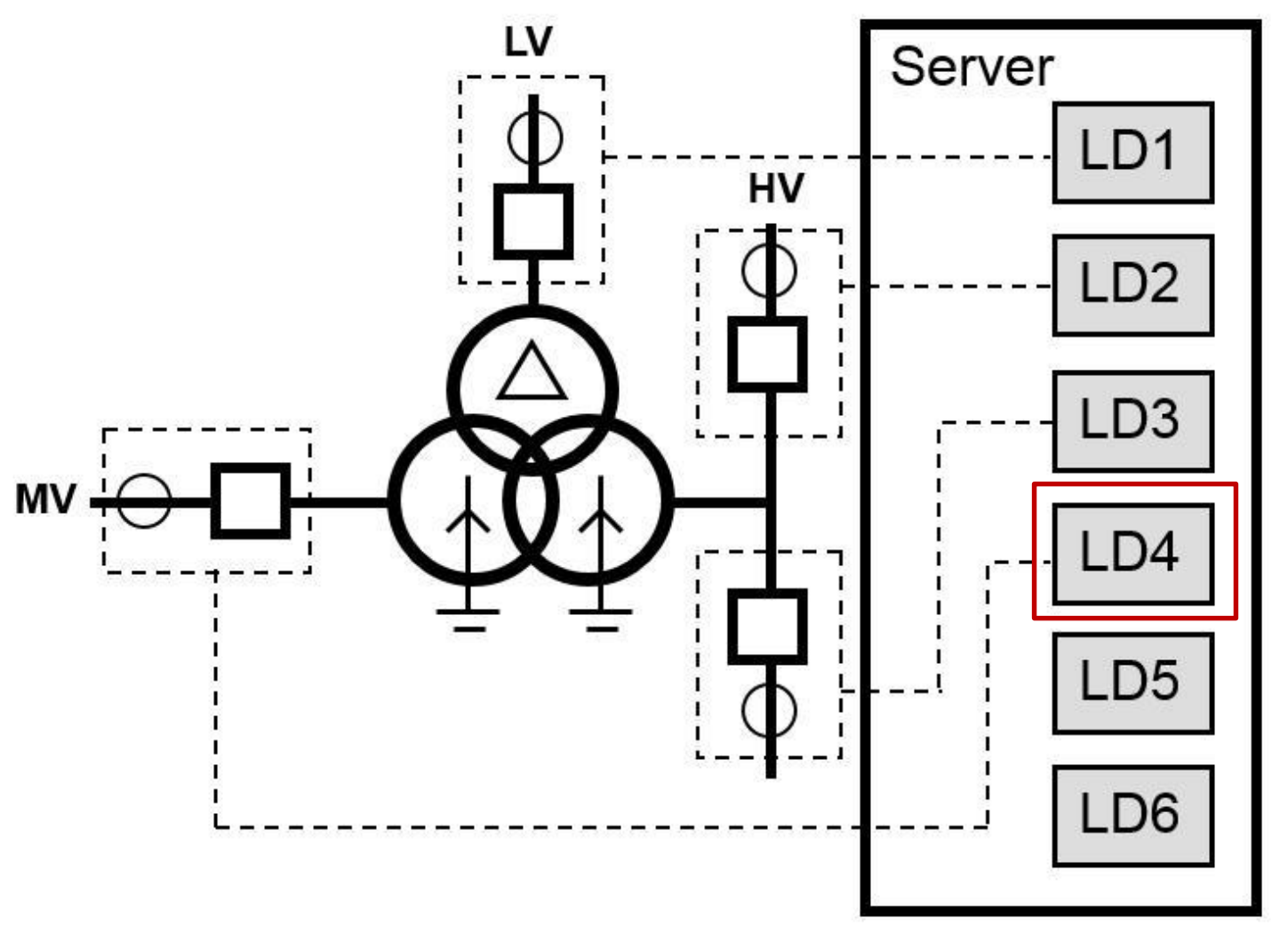

# LD Object Model

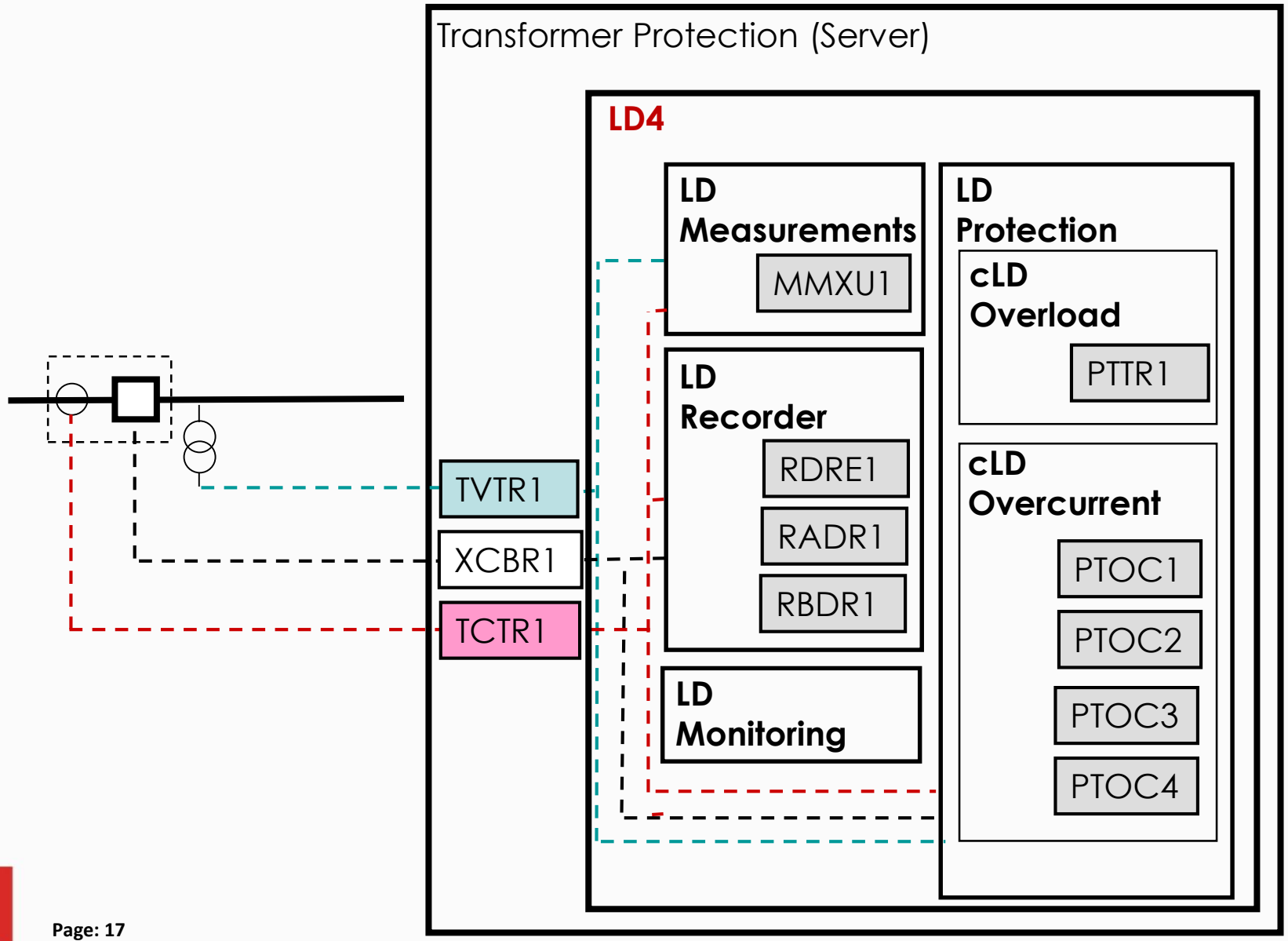

# Edition 2 – hierarchy of LDs

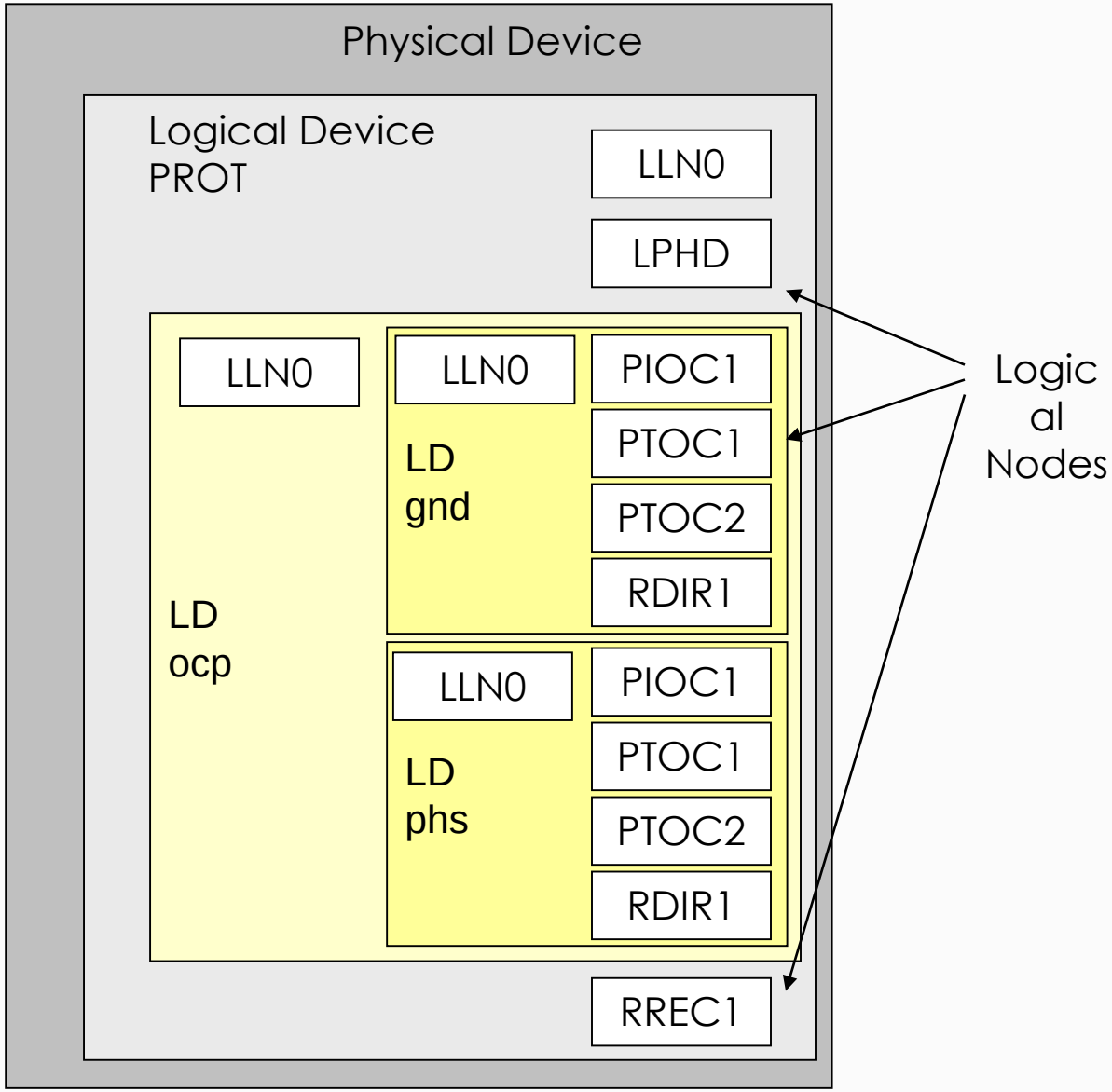

# LLN0 controls logical nodes

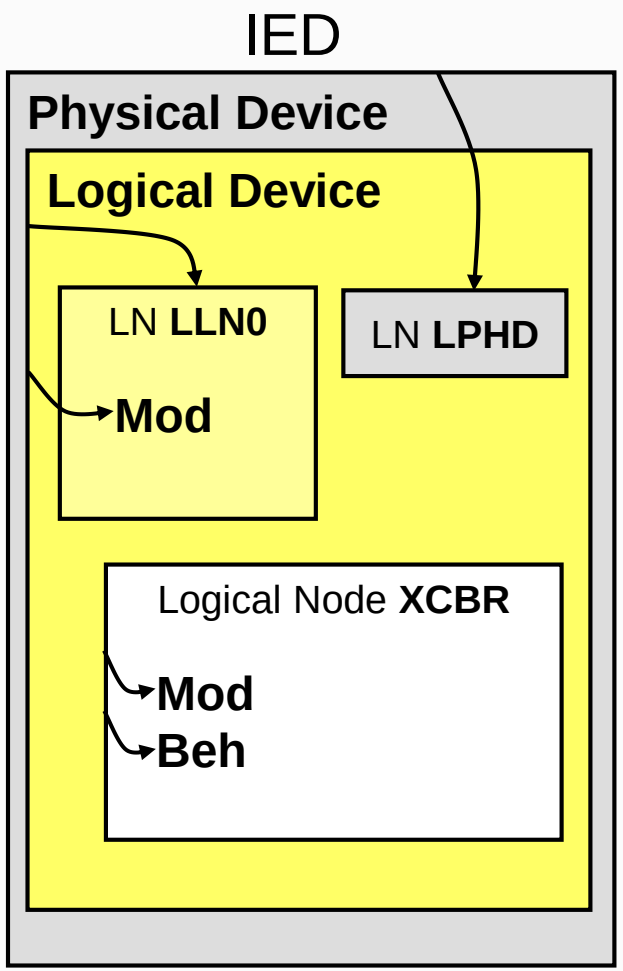


***Mod**: on | blocked | test | test/blocked | off*

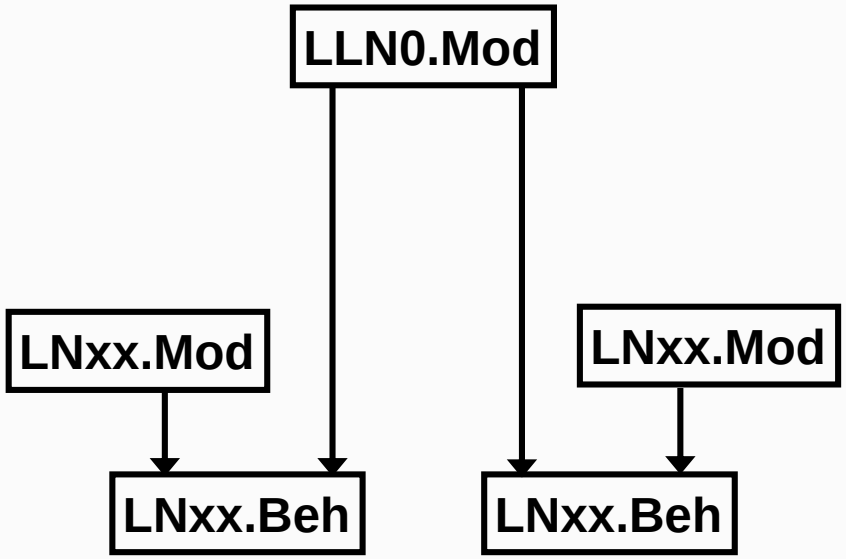

# Hierarchy of logical devices

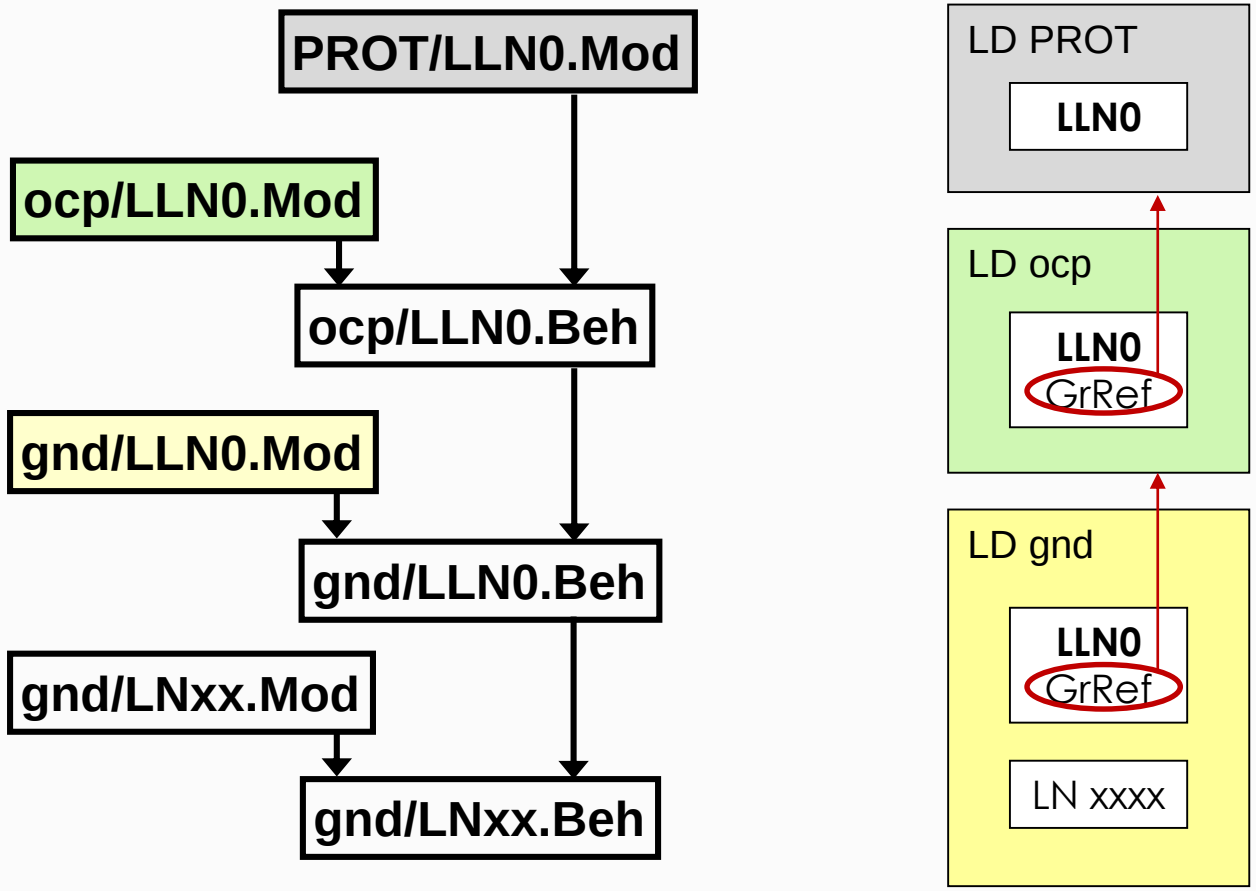

# Conclusions

- The modeling of IEC 61850 based multifunctional transformer protection relays requires good understanding of their functional hierarchy, as well as the object modeling principles and their extensions in Edition 2 of the standard.
- Complex devices are modeled based on IEC 61850 Edition 2 as servers with multiple nested Logical Devices that correspond to typical substation functions, such as Protection, Control and Measurements.