The Missing Link: How CT and VT Connection Errors Affect Protection

Marcel Taberer, Praveen Iyer, and Karl Zimmerman
Schweitzer Engineering Laboratories, Inc.

© 2021 SEL

Introduction

- IT secondary wiring fundamentals
- Testing and commissioning approaches for IT circuits
- Analysis of field events
- Conclusion

IT secondary wiring fundamentals

There are three main aspects associated with IT secondary wiring implementation to consider:

- Neutral connection and grounding
- Polarity connections
- Phase rotation

Neutral connection and grounding of IT secondary circuits

Only one grounding point per secondary circuit

"An IT secondary circuit, irrespective of the number of IT secondary windings in it, should be solidly grounded to the grounding grid at only one point"

—IEEE C57.13.3-2014

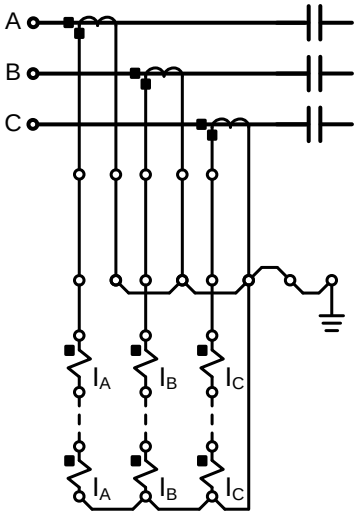

Neutral connection and grounding of IT secondary circuits

Used vs. unused IT circuits

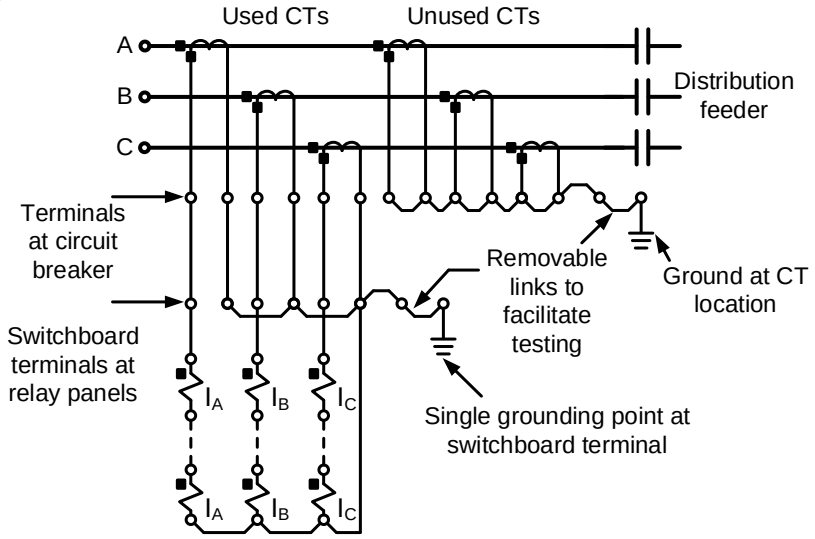

Neutral connection and grounding of IT secondary circuits

Multiple secondary windings

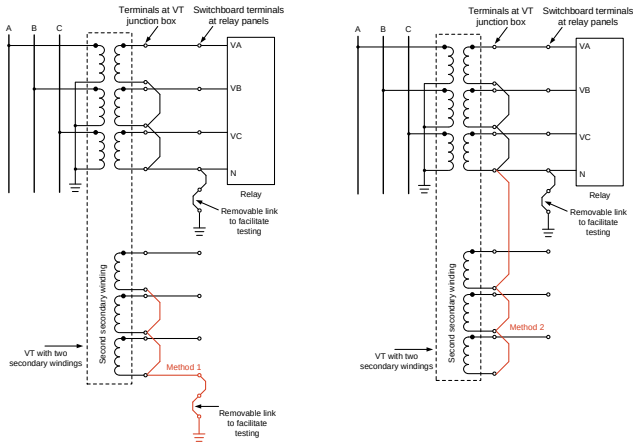

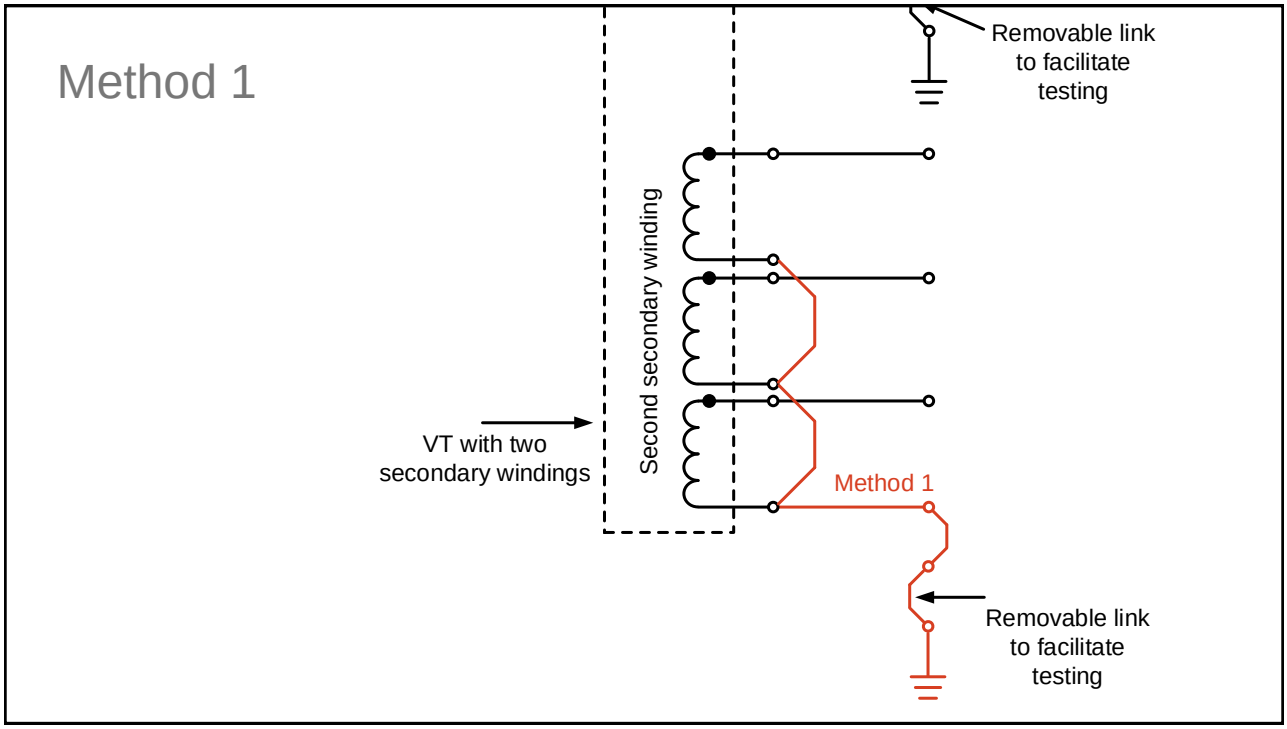
Method 1
Removable link
to facilitate
testing
Second secondary winding
VT with two
secondary windings
Method 1
Removable link
to facilitate
testing

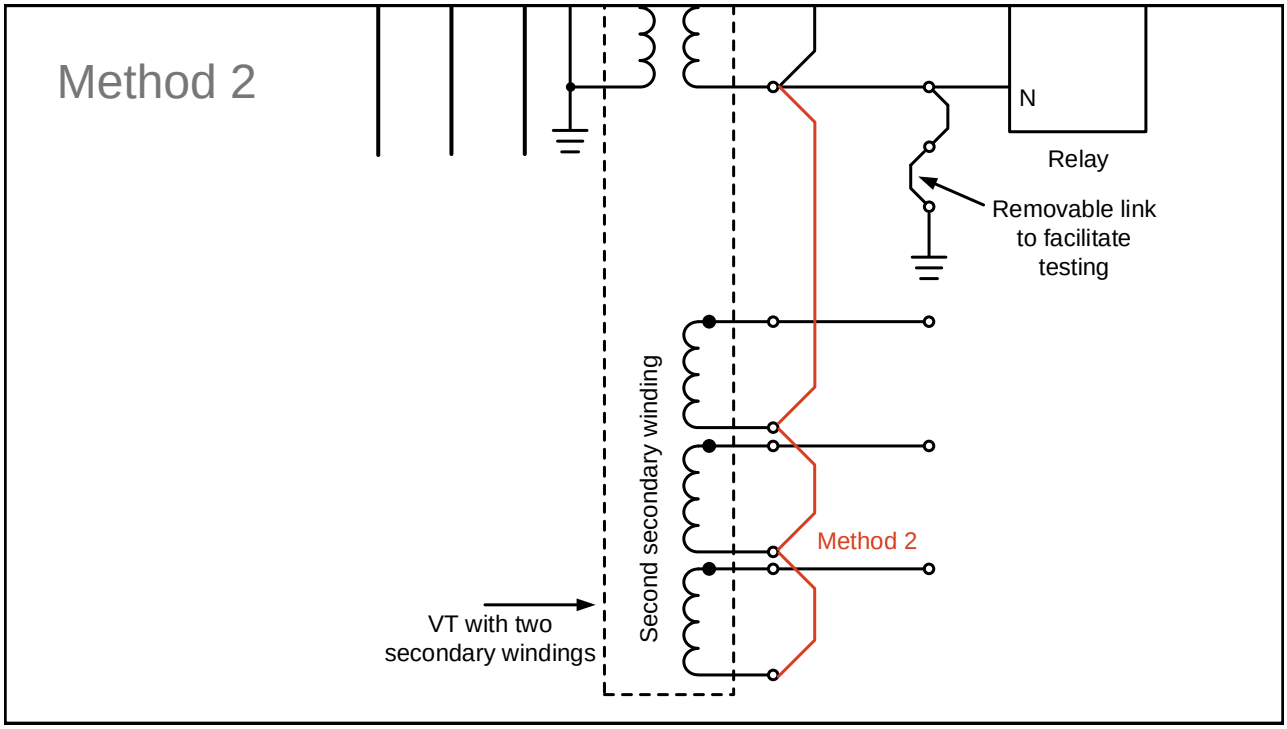
Method 2
N
Relay
Removable link
to facilitate
testing
Second secondary winding
Method 2
VT with two
secondary windings

Polarity connections

Standard practice is to wire CTs and VTs with conventional polarity connection

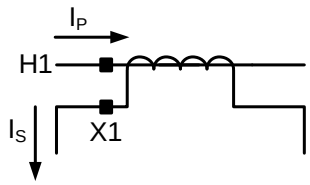

Current transformer

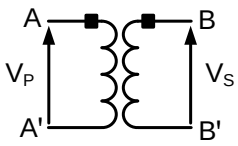

Voltage transformer

Phase rotation

- Ensure correct CT and VT connections to relay
- Inform relay of phase rotation setting

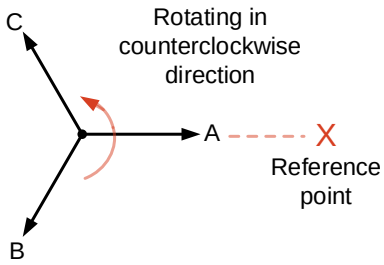

ABC phase sequence

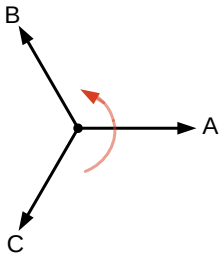

ACB phase sequence

Possible points of failure / error

1. IA and IB swapped
2. 2nd ground on CT secondary
3. Insulation damaged
4. Incorrect CT tap
5. CT polarity rolled
6. Missing or broken neutral wire
7. CT open circuit

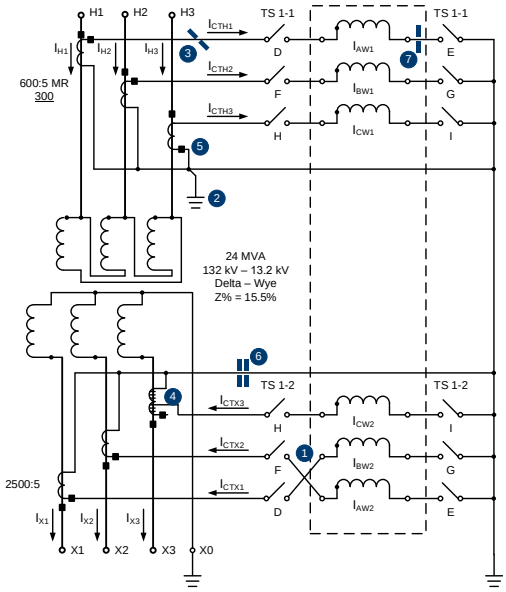

Possible points of failure / error

1. IA and IB swapped

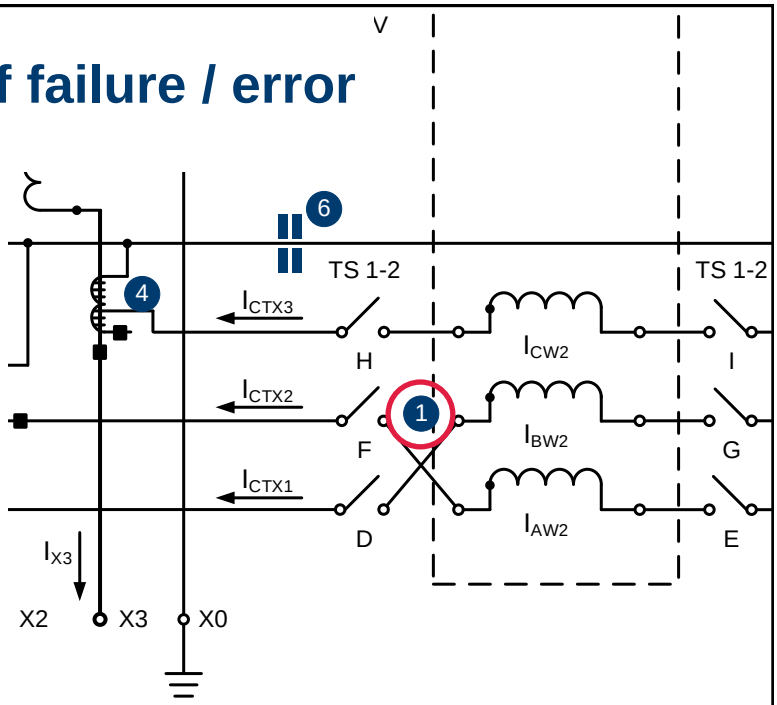

Possible points of failure / error

1. IA and IB swapped
2. 2nd ground on CT secondary

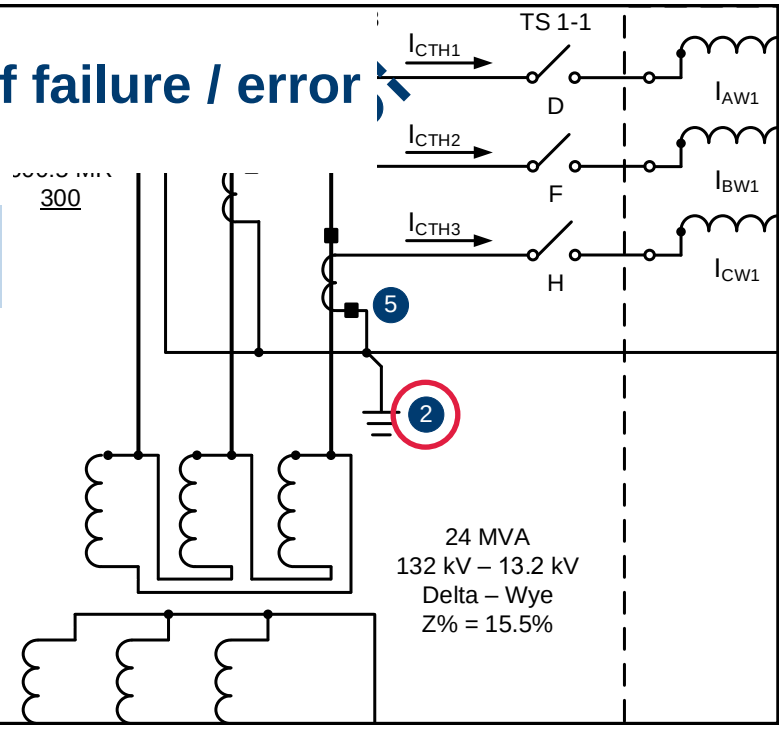

Possible points of failure / error

1. IA and IB swapped
2. 2nd ground on CT secondary

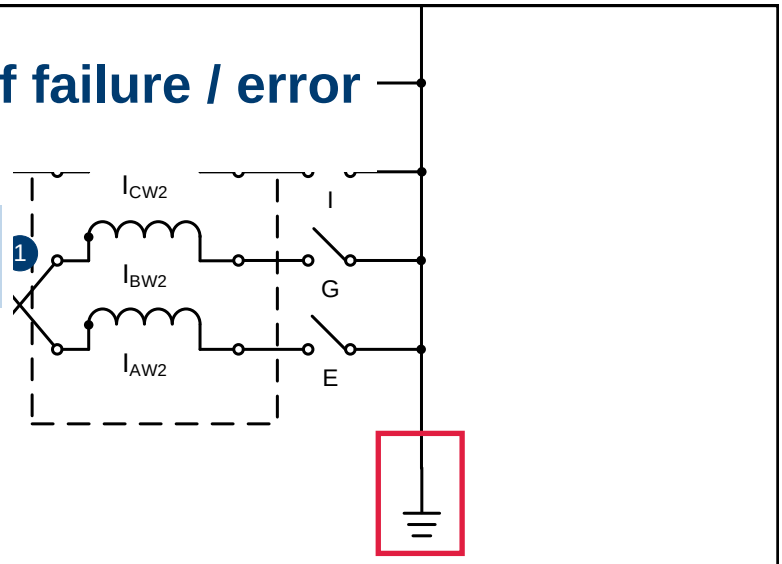

Possible points of failure / error

1. IA and IB swapped
2. 2nd ground on CT secondary
3. Insulation damaged

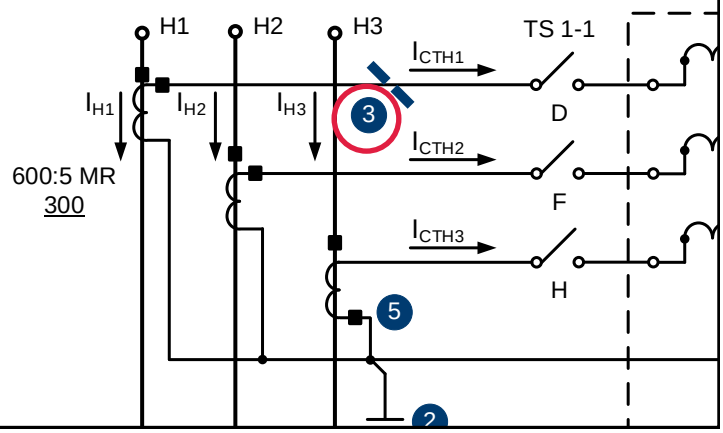

Possible points of failure / error

1. IA and IB swapped
2. 2nd ground on CT secondary
3. Insulation damaged
4. Incorrect CT tap

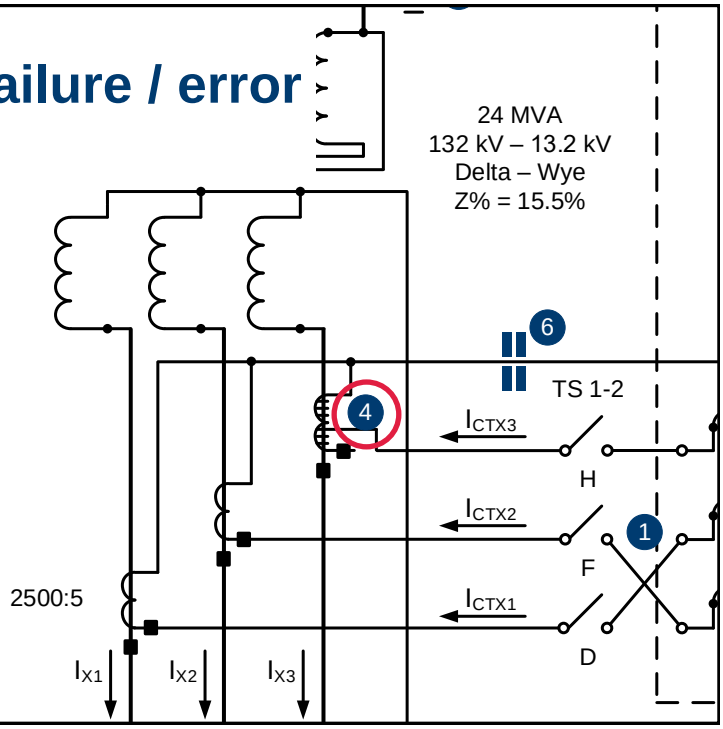

Possible points of failure / error

1. IA and IB swapped
2. 2nd ground on CT secondary
3. Insulation damaged
4. Incorrect CT tap

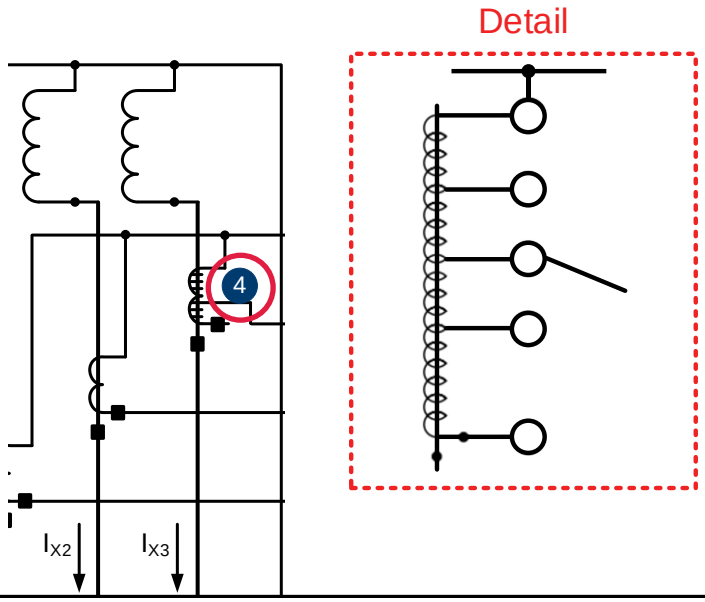

Possible points of failure / error

1. IA and IB swapped
2. 2nd ground on CT secondary
3. Insulation damaged
4. Incorrect CT tap
5. CT polarity rolled

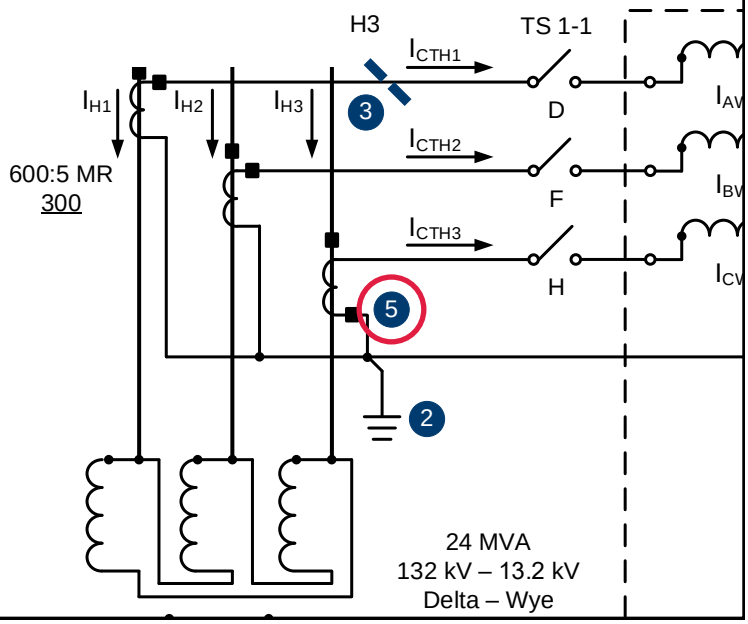

Possible points of failure / error

1. IA and IB swapped
2. 2nd ground on CT secondary
3. Insulation damaged
4. Incorrect CT tap
5. CT polarity rolled
6. Missing or broken neutral wire

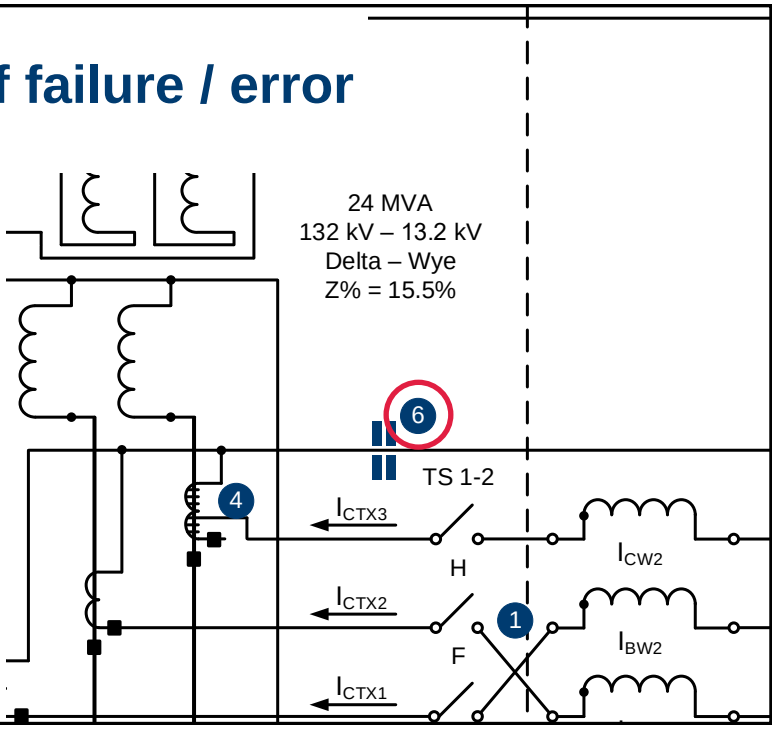

Possible points of failure / error

1. IA and IB swapped
2. 2nd ground on CT secondary
3. Insulation damaged
4. Incorrect CT tap
5. CT polarity rolled
6. Missing or broken neutral wire
7. CT open circuit

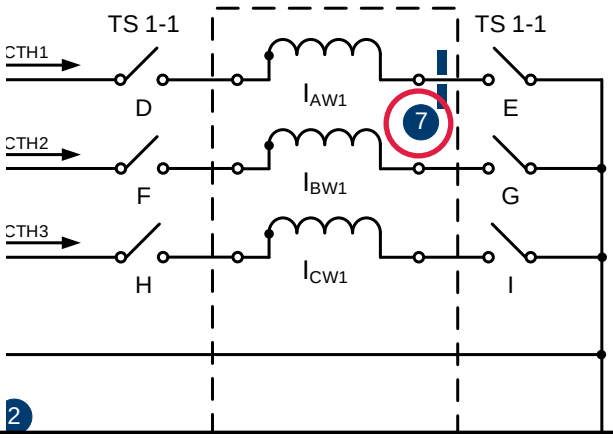

Possible points of failure / error

1. IA and IB swapped
2. 2nd ground on CT secondary
3. Insulation damaged
4. Incorrect CT tap
5. CT polarity rolled
6. Missing or broken neutral wire
7. CT open circuit

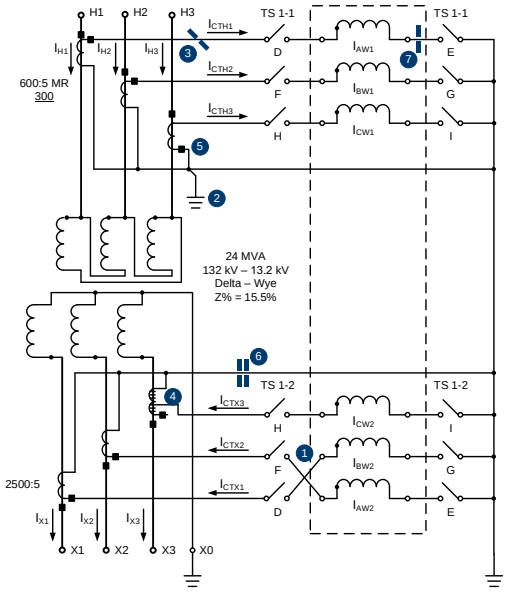

Checking IT secondary wiring

Insulation tests

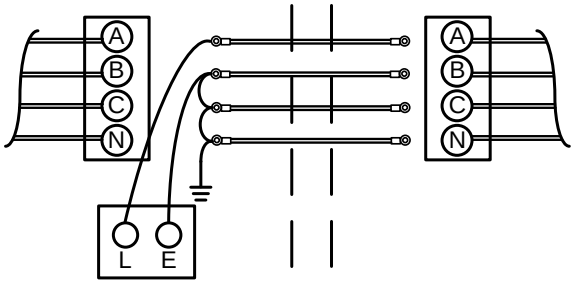

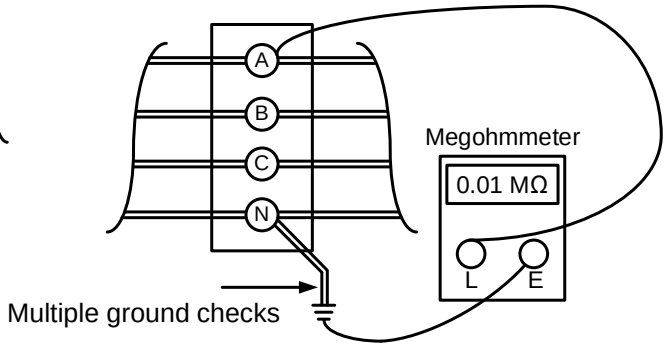

Physical cable checks

Checking IT secondary wiring

Insulation tests

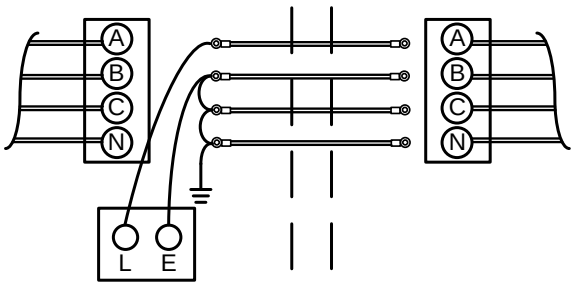

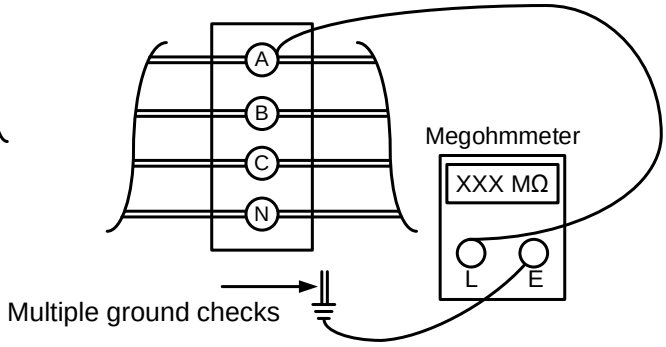

Physical cable checks

Primary injection and final checks

Primary injection

- Perform primary injection on ITs (3PH and 1PH), why?
- Perform a polarity check on ITs, why?

Final checks

- Documentation and switching procedures
- Relay meter checks

```
=>MET <Enter>

XXXXXXXX                                  Date: 02/24/2010   Time: 11:43:44.875
GENERATOR RELAY                           Time Source: Internal

                IAX      IBX      ICX      IGX      I1X      3I2X
Mag (A pri.)    505.1    501.2    499.4      6.9    501.9      3.2
Angle (deg)     -30.0   -149.9     89.9    -44.8    -30.0     -4.0

                IAY      IBY      ICY      IGY      I1Y      3I2Y
Mag (A pri.)    500.7    502.5    500.1      9.2    501.1      4.9
Angle (deg)     150.0     30.6    -89.1     40.7    150.5     83.8

                IN
Mag (A pri.)      0.0
Angle (deg)     143.8

                VAX      VBX      VCX      VGX      V1X      3V2X
Mag (V pri.)   9978.0   9982.1   9986.7     53.6   9982.2     38.6
Angle (deg)       0.0   -120.3    120.0    151.5     -0.1     27.1

                VS       VN
```

```
                Operate Currents                Restraint Currents
Tap)            IOP1     IOP2     IOP3     IRT1     IRT2     IRT3
                0.01     0.00     0.01     0.19     0.18     0.19
                Second Harmonic Currents        Fifth Harmonic  Currents
                I1F2     I2F2     I3F2     I1F5     I2F5     I3F5

                A        B        C        3I0      3I2      I1
                386.444  385.401  385.597  2.838    1.747    385.813
                -0.10    -119.90  119.80   -2.60    -19.00   0.00

                A        B        C        3I0      3I2      I1
                385.644  387.077  395.563  32.567   30.969   389.172
                179.60   59.50    -56.10   14.80    133.70   -179.00
```

Primary injection and final checks

```
=>MET <ENTER>
DIFF RELAY                          Date: 06/05/01   Time: 10:28:50.360
EXAMPLE: BUS B, BREAKER 3
```

Local	A	B	C	3I0	3I2	I1
I MAG (A Pri)	386.444	385.401	385.597	2.838	1.747	385.813
I ANG (DEG)	-0.10	-119.90	119.80	-2.60	-19.00	0.00

Channel X PRIM	A	B	C	3I0	3I2	I1
I MAG (A Pri)	385.644	387.077	395.563	32.567	30.969	389.172
I ANG (DEG)	179.60	59.50	-56.10	14.80	133.70	-179.00

Primary injection and final checks

	Operate Currents			Restraint Currents		
	IOP1	IOP2	IOP3	IRT1	IRT2	IRT3
I (Mult. of Tap)	0.01	0.00	0.01	0.19	0.18	0.19
	Second Harmonic Currents			Fifth Harmonic Currents		
	I1F2	I2F2	I3F2	I1F5	I2F5	I3F5
I (Mult. of Tap)	0.00	0.00	0.00	0.00	0.00	0.00

```
=>MET <Enter>

XXXXXXXX                                  Date: 02/24/2010   Time: 11:43:44.875
GENERATOR RELAY                           Time Source: Internal

                  IAX      IBX      ICX      IGX      I1X      3I2X
Mag (A pri.)     505.1    501.2    499.4      6.9    501.9       3.2
Angle (deg)      -30.0   -149.9     89.9    -44.8    -30.0      -4.0

                  IAY      IBY      ICY      IGY      I1Y      3I2Y
Mag (A pri.)     500.7    502.5    500.1      9.2    501.1       4.9
Angle (deg)      150.0     30.6    -89.1     40.7    150.5      83.8

                  IN
Mag (A pri.)       0.0
Angle (deg)      143.8

                  VAX      VBX      VCX      VGX      V1X      3V2X
Mag (V pri.)   9978.0   9982.1   9986.7     53.6   9982.2      38.6
Angle (deg)       0.0   -120.3    120.0    151.5     -0.1      27.1

                  VS       VN
```

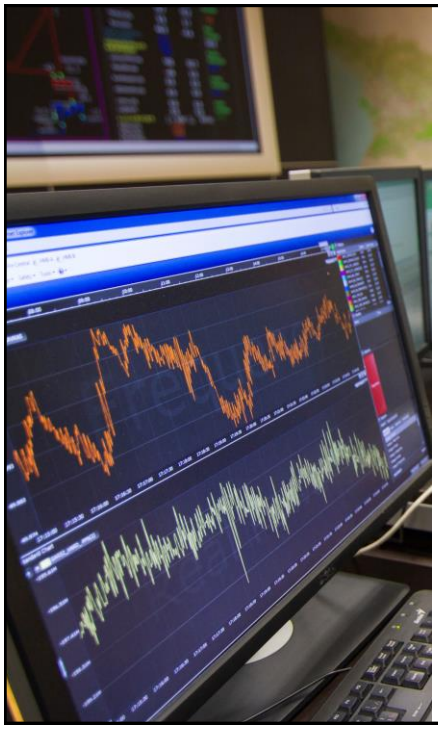

Analysis of field events

Lessons learned

VT wiring errors result in undesired distance element trips

Phasor Calculations

Color	Name	Mag	Angle
	VA.Phasor	206.647	0°
	VB.Phasor	204.71	-6.52°
	VC.Phasor	205.08	119.88°

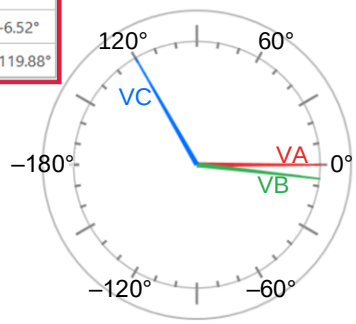

Case 1

- Expectation is balanced voltages, what do you notice?
- How did this affect distance element?
- Root cause: no voltage checks before placing relay into service

VT wiring errors result in undesired distance element trips

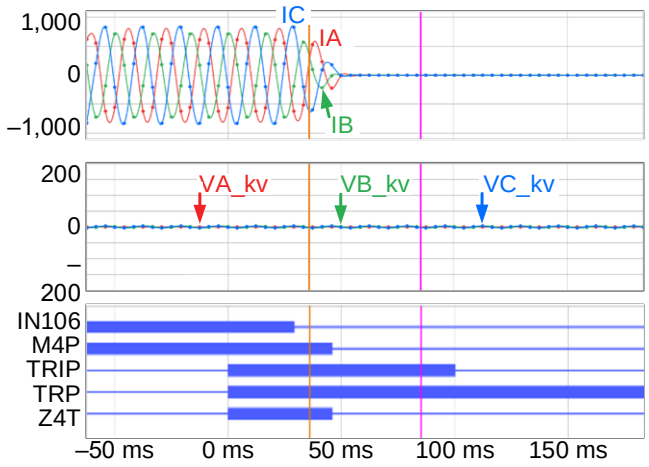

Case 2

- Expectation is balanced voltages, what do you notice?
- How did this affect distance element?
- Root cause: no voltage checks before placing relay into service

Transmission line trips incorrectly

Directional element declares forward for reverse fault

- DCB scheme deployed
- A-G fault on 69 kV feeder

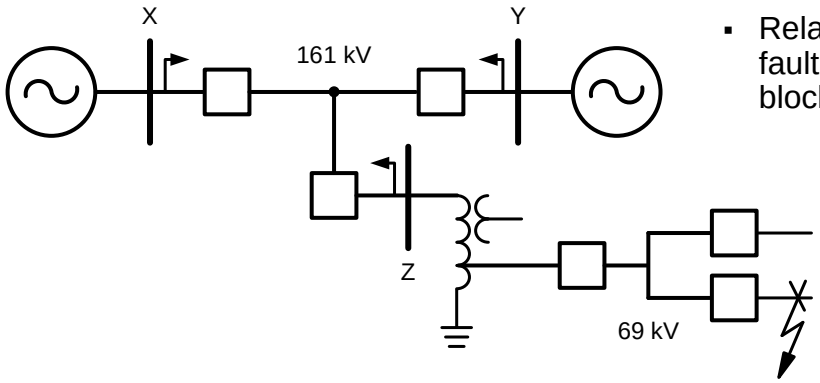

- Relay at Z terminal declares fault as forward, fails to send blocking signal
- Result: 161 kV system trips
- Let's look deeper into event…

Transmission line trips incorrectly

Directional element declares forward for reverse fault

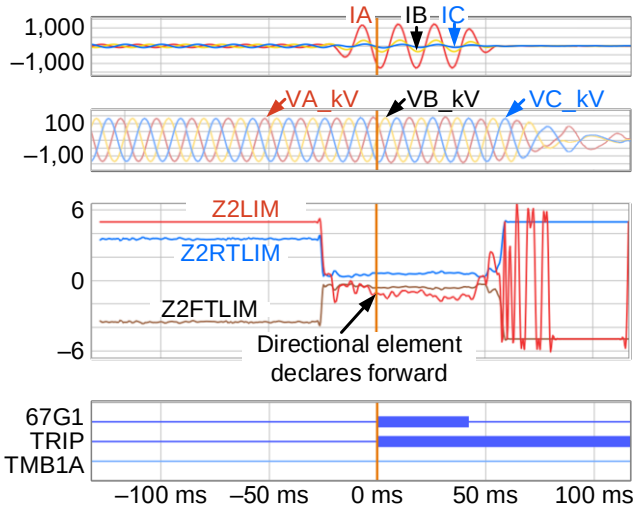

- Actual measured quantity is Z2LIM
- Forward threshold is Z2FTLIM
- Reverse threshold is Z2RTLIM
- Directional element asserted with no blocking signal
- Why?

Transmission line trips incorrectly

Directional element declares forward for reverse fault

- Note phenomena taking place on A-Phase voltage

Pre-Fault				Fault			
Color	Name	Mag	Angle	Color	Name	Mag	Angle
	VA_kV.Phasor	94.2864	0°		VA_kV.Phasor	99.0039	0°
	VB_kV.Phasor	94.5239	-119.96°		VB_kV.Phasor	95.4164	-118.63°
	VC_kV.Phasor	94.2917	119.78°		VC_kV.Phasor	97.9356	126.5°
	IA.Phasor	62.4147	-169.53°		IA.Phasor	874.3	113.58°
	IB.Phasor	63.6878	70.87°		IB.Phasor	229.069	98.94°
	IC.Phasor	65.4989	-50.79°		IC.Phasor	72.1748	82.48°

- Is this normal for A-G faults?
- What is history of previous events?

Transmission line trips incorrectly

Investigation of past events

- A-Phase VT had been replaced a few years earlier
- All recent undesired operations had occurred on A-Phase-to-ground

Date and time	Faulted phase	Fault location	Targets
5 / 27 / 2018 10:20	AG T	–-99.72	TRIP COMM ZONE2
6 / 28 / 2018 09:01	AG T	–-85.27	TRIP ZONE1
7 / 17 / 2018 13:25	AG T	–-160.39	TRIP COMM ZONE2
5 / 6 / 2019 02:18	AG T	–-166.33	TRIP COMM ZONE2
6 / 21 / 2019 04:45	BG T	19.18	TRIP ZONE1
7 / 10 / 2019 13:05	AG T	–-118.29	TRIP COMM ZONE2

Transmission line trips incorrectly

Possible errors in VT circuit

- Drawing and wiring errors found
- Two, not three, secondary VT circuits present (W was not present)
- Result is complete review of drawings and comprehensive test of ground connections in VT circuit

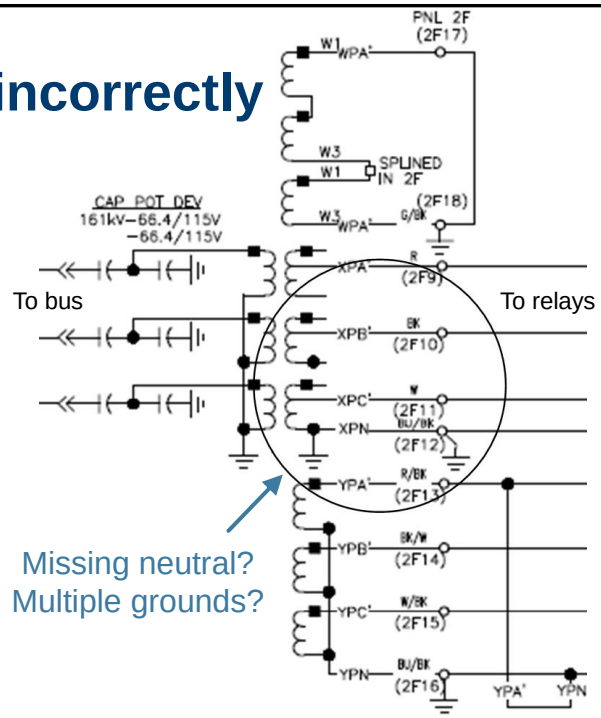

A few months later… reverse fault on 69 kV bus

Directional element declares reverse for reverse fault

- A-Phase voltage drops as expected
- Z2LIM is now above reverse threshold, Z2RTLIM
- Relay correctly sends block signal
- 161 kV line, correctly, does not trip

Pre-fault

Color	Name	Mag	Angle
	VA_kV.Phasor	95.3032	0°

Fault

Color	Name	Mag	Angle
	VA_kV.Phasor	66.3338	0°

A few months later… reverse fault on 69 kV bus

Directional element declares reverse for reverse fault

- A-Phase voltage drops as expected
- Z2LIM is now above reverse threshold, Z2RTLIM
- Relay correctly sends block signal
- 161 kV line, correctly, does not trip

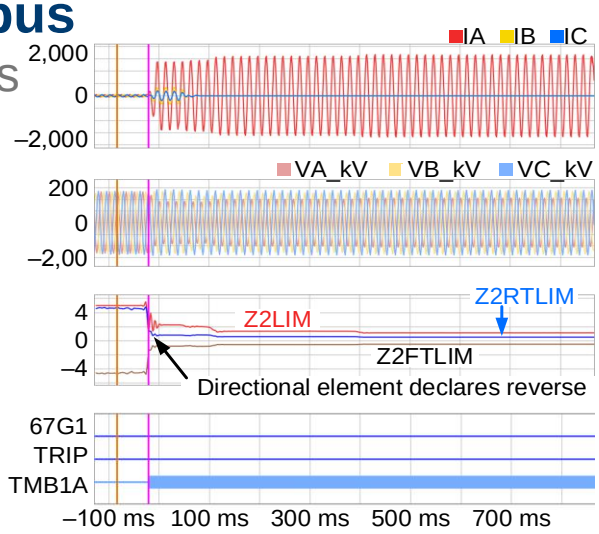

Incorrect CT connections

Auxiliary transformer trips when energized

Transformer and CT arrangement

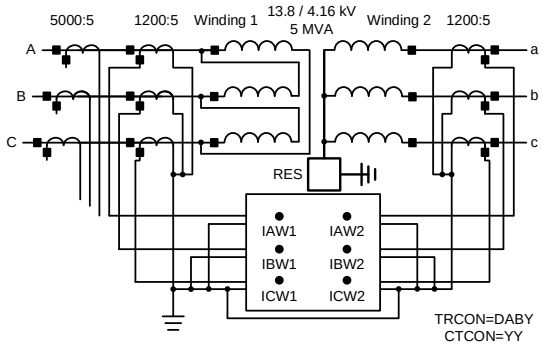

Relay settings

```
W1CT := WYE  W2CT := WYE
CTR1 := 240  CTR2 := 240  MVA  := OFF  ICOM := Y
W1CTC := 0  W2CTC := 1 VWDG1 := 13.8 VWDG2 := 4.16
```

- What happened?
- Let's look deeper …

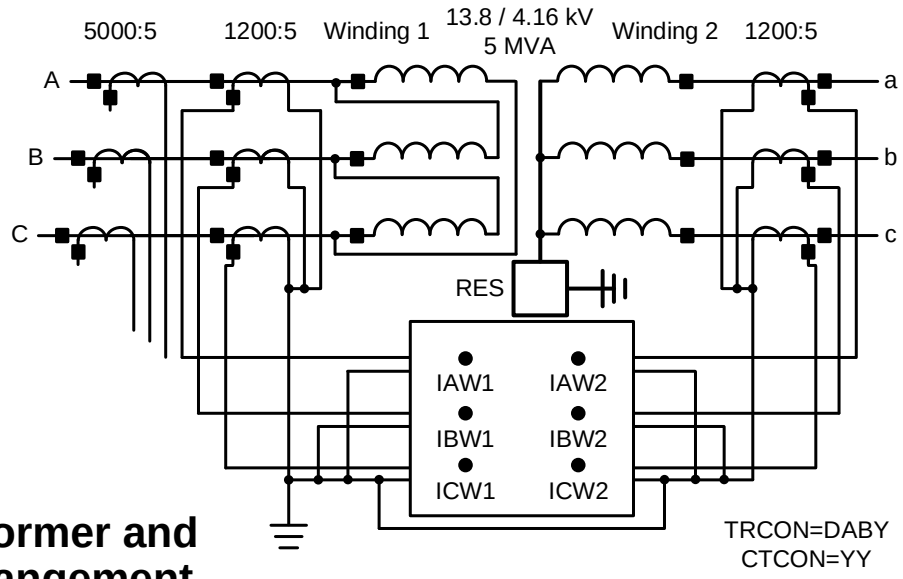

Transformer and CT arrangement

Incorrect CT connections

Auxiliary transformer trips when energized

Relay settings

```
W1CT := WYE   W2CT := WYE
CTR1 := 240   CTR2 := 240   MVA  := OFF   ICOM := Y
W1CTC := 0   W2CTC := 1 VWDG1 := 13.8 VWDG2 := 4.16
```

Incorrect CT connections

Auxiliary transformer trips when energized

Phasor Calculations

Color	Name	Mag	Angle
	IAW1_A.Phasor	41.9829	0°
	IBW1_A.Phasor	48.06	-123.83°
	ICW1_A.Phasor	43.0163	118.89°
	IAW2_A.Phasor	576.011	149.39°
	IBW2_A.Phasor	650.345	28.54°
	ICW2_A.Phasor	617.93	-98.83°

Event analysis

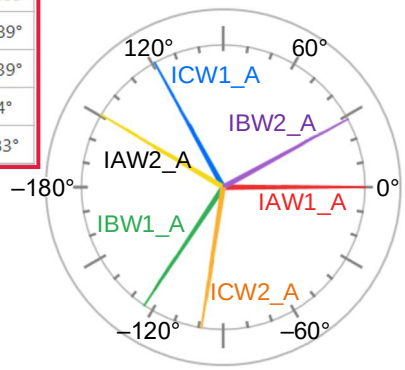

- Phase rotation for Winding 1 and Winding 2?
- Angle expectation between Winding 1 and Winding 2?
- Load was + – 4 MVA, do uncompensated currents match for Winding 1 and Winding 2?

Incorrect CT connections

Auxiliary transformer trips when energized

Expected Winding 1

$$I(13.8kV) = \frac{4MVA}{(\sqrt{3})(13.8kV)}$$

167A

Expected Winding 2

$$I(4.16kV) = \frac{4MVA}{(\sqrt{3})(4.16kV)}$$

555A

Load current:

expected

vs.

actual

Phasor Calculations

Color	Name	Mag	Angle
	IAW1_A.Phasor	41.9829	0°
	IBW1_A.Phasor	48.06	-123.83°
	ICW1_A.Phasor	43.0163	118.89°
	IAW2_A.Phasor	576.011	149.39°
	IBW2_A.Phasor	650.345	28.54°
	ICW2_A.Phasor	617.93	-98.83°

Incorrect CT connections

Auxiliary transformer trips when energized

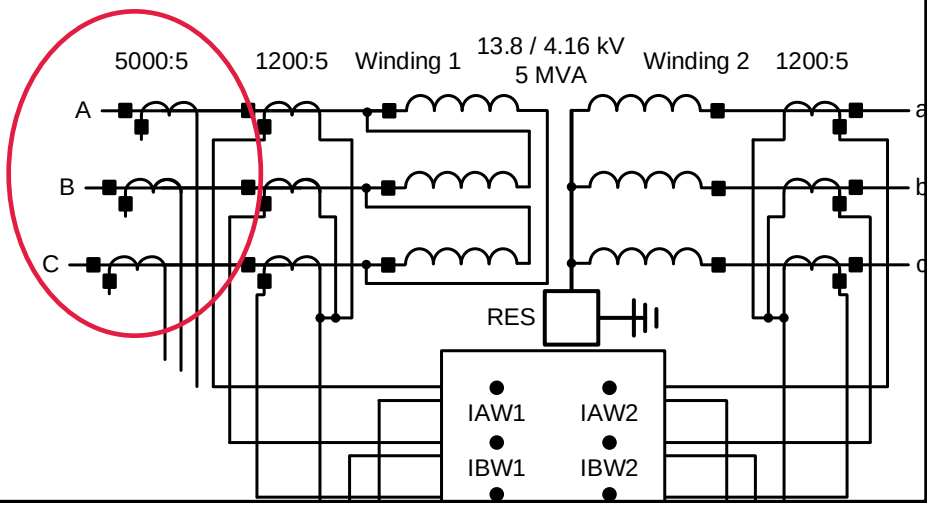

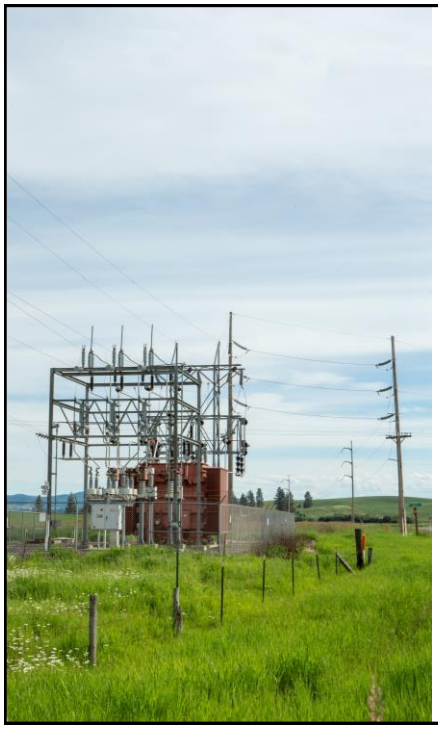

Missing neutral link causes misoperation

High impedance bus differential theory

- High impedance bus differential relay presents high impedance to flow of differential current
- High impedance relay is set to trip based on voltage drop across relay; element is extremely sensitive

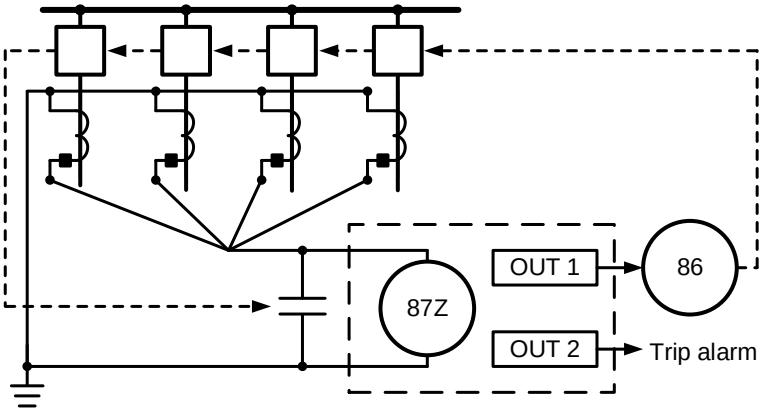

Case study

Power system one-line case study

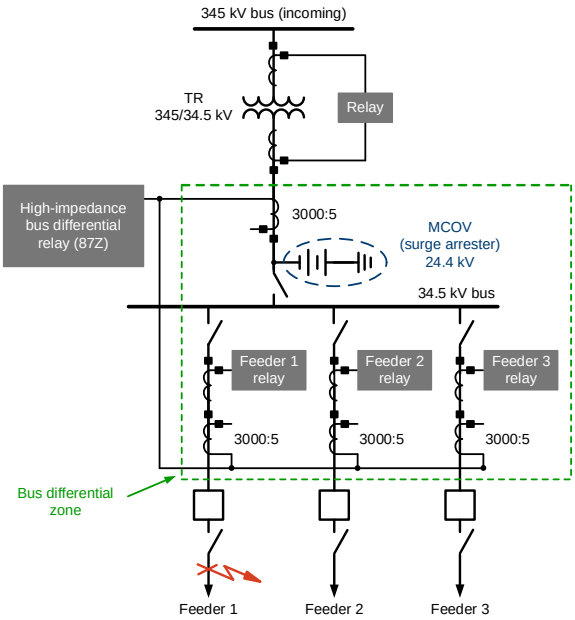

Case study
Power system
one-line case study

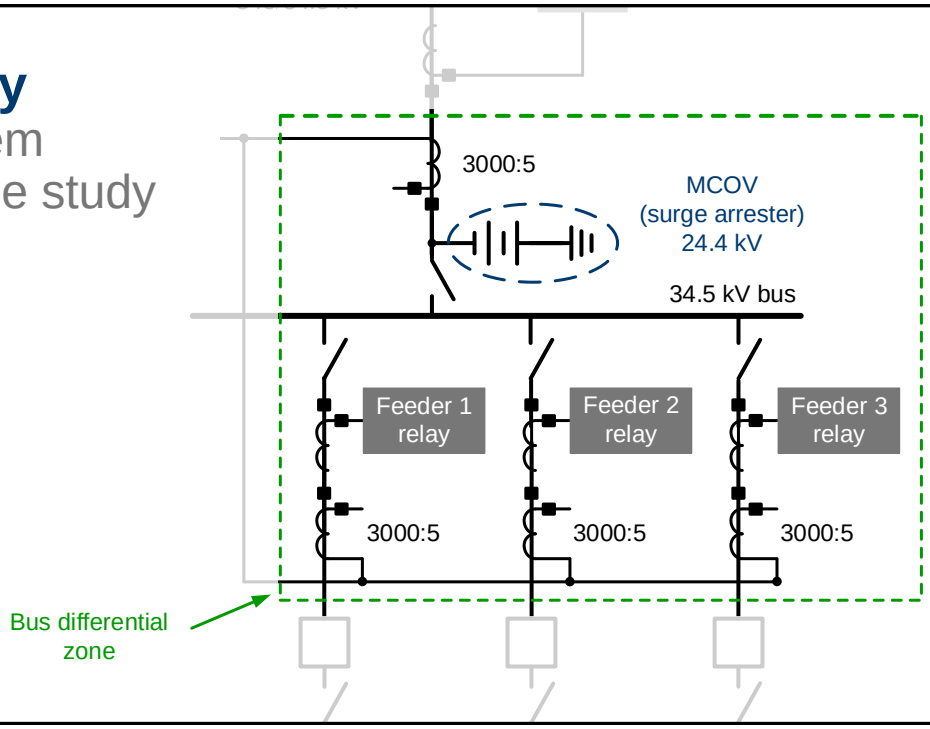

Case study
Power system
one-line case study

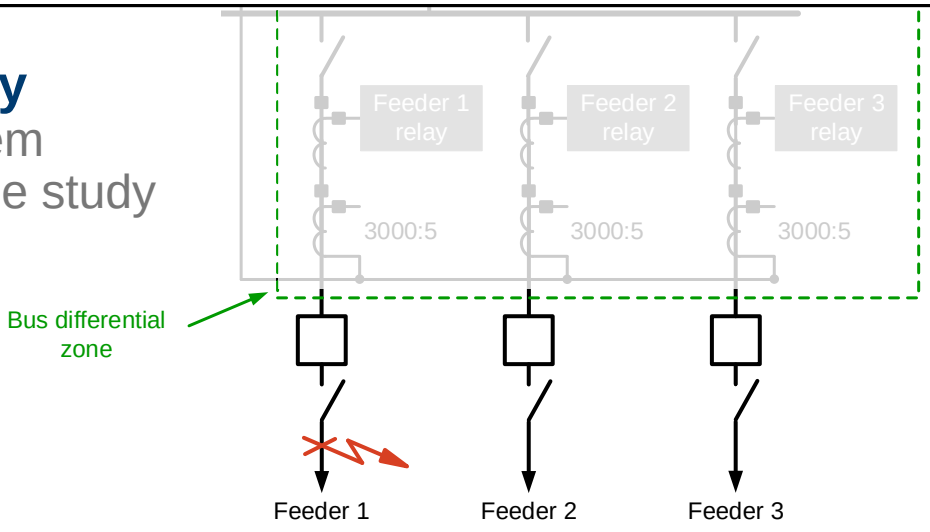

Root cause analysis

Step 1: Verify correct application of high-impedance bus differential relay

All considerations were met

Step 2: Determine if differential operated because of in-zone lightning arrester?

No conclusive evidence

Root cause analysis

Step 3: Investigate possible wiring error

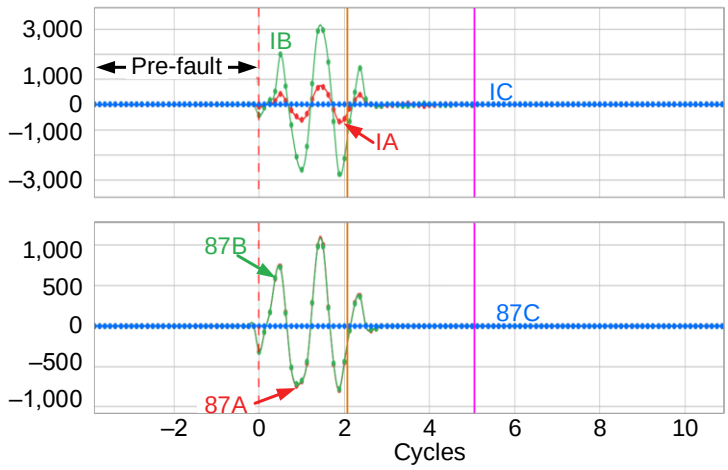

Root cause analysis

Step 4: Investigating event reports from neighboring relays

The downstream feeder relay operated for this fault

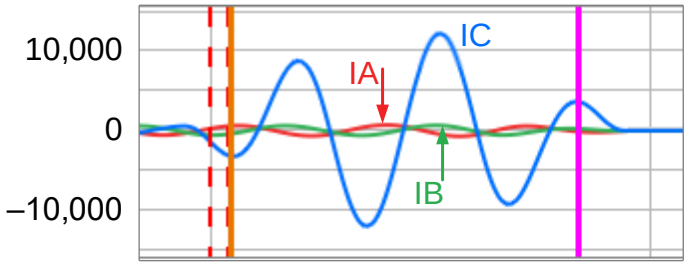

Root cause analysis

Step 5: Comparing all event reports

- Problem seems like wiring error, like missing or broken neutral-to-ground link
- Why?

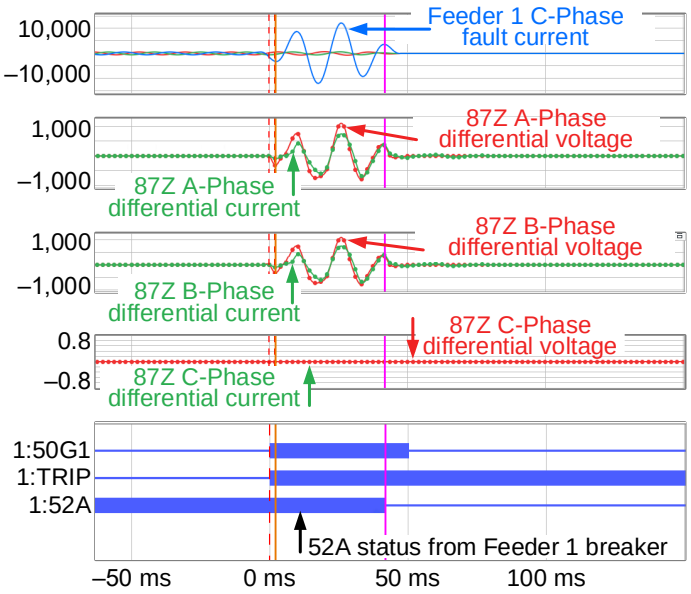

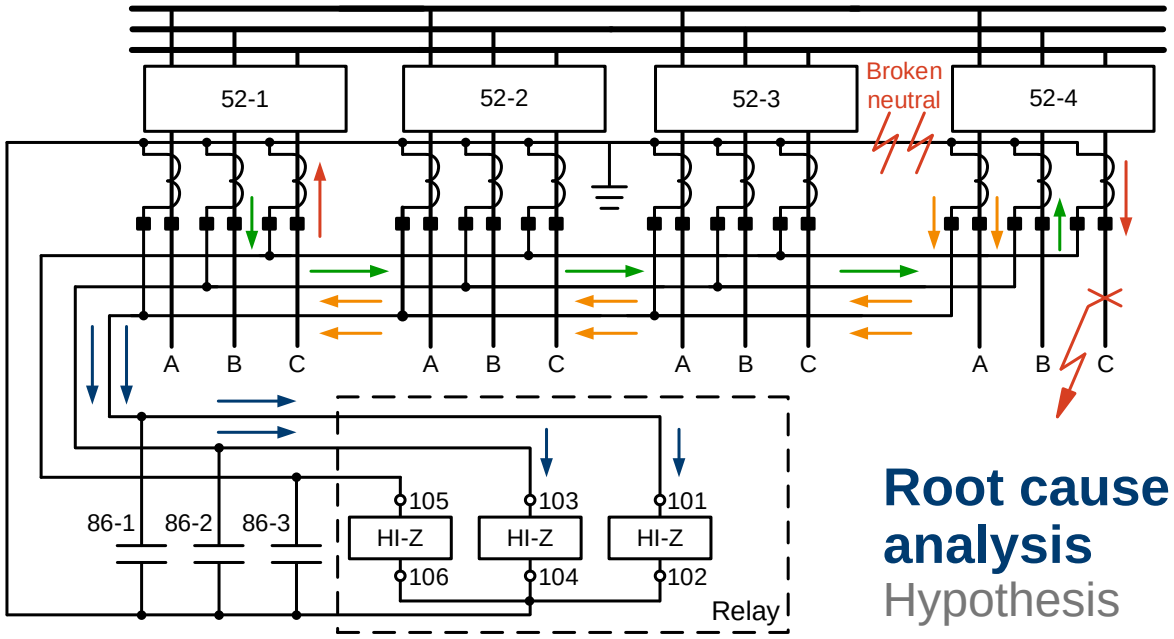

Root cause analysis

Hypothesis

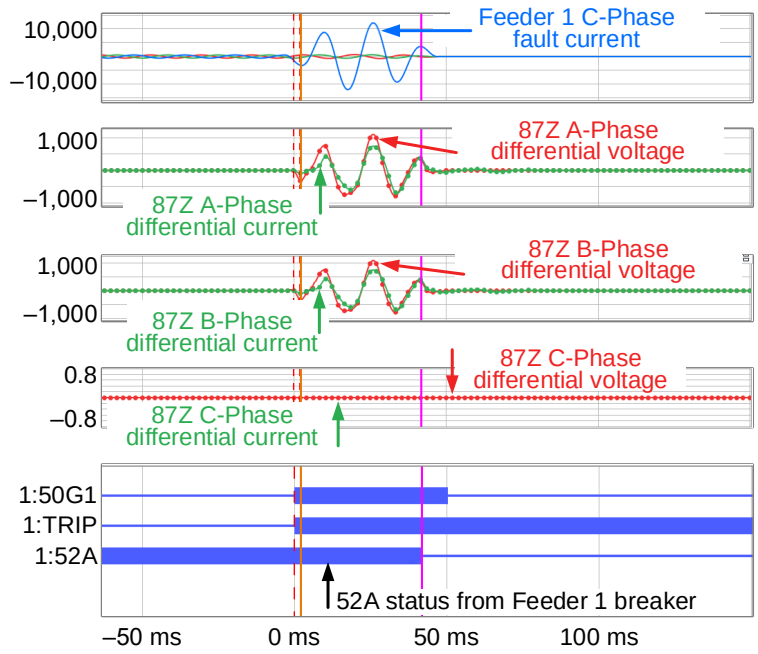

Conclusion

- CT and VT connection errors can lead to undesired operations
- Misoperations can be avoided by adhering to industry standards for grounding techniques on ITs
- Obvious errors can be caught when following and implementing good commissioning practices

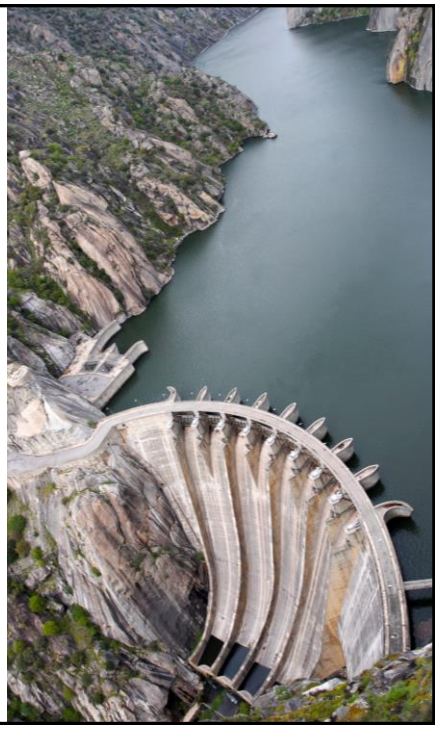

Questions?