Tutorial on the Protection of Three Single-Phase Transformers

Stéphan D. Picard– GE Grid Solutions

Yujie Yin– GE Grid Solutions

Nicholas Keough– Nalcor Energy

2019 Texas A&M Protective Relaying Conference

Agenda

- Introduction
- Review of Transformer Differential Protection
- Solution Proposal
- Other Protection Functions
- Conclusion

Introduction

Churchill Falls Terminal Station 2 of the Lower Churchill Project

Three new/extension sub:

- Muskrat Falls
- Churchill Falls
- Soldiers Pond

At Churchill Falls:

- 3 Single-Phase Autotransformers
- 3 x 280 MVA = 840 MVA
- 735-315-13.8 kV

Review of Differential Protection

Kirchhoff's law

“Teaching is the art of telling smaller and smaller lies”

Review of Differential Protection

Kirchhoff's law: Sum of Currents = Zero

Entering currents = Exiting currents

Review of Differential Protection

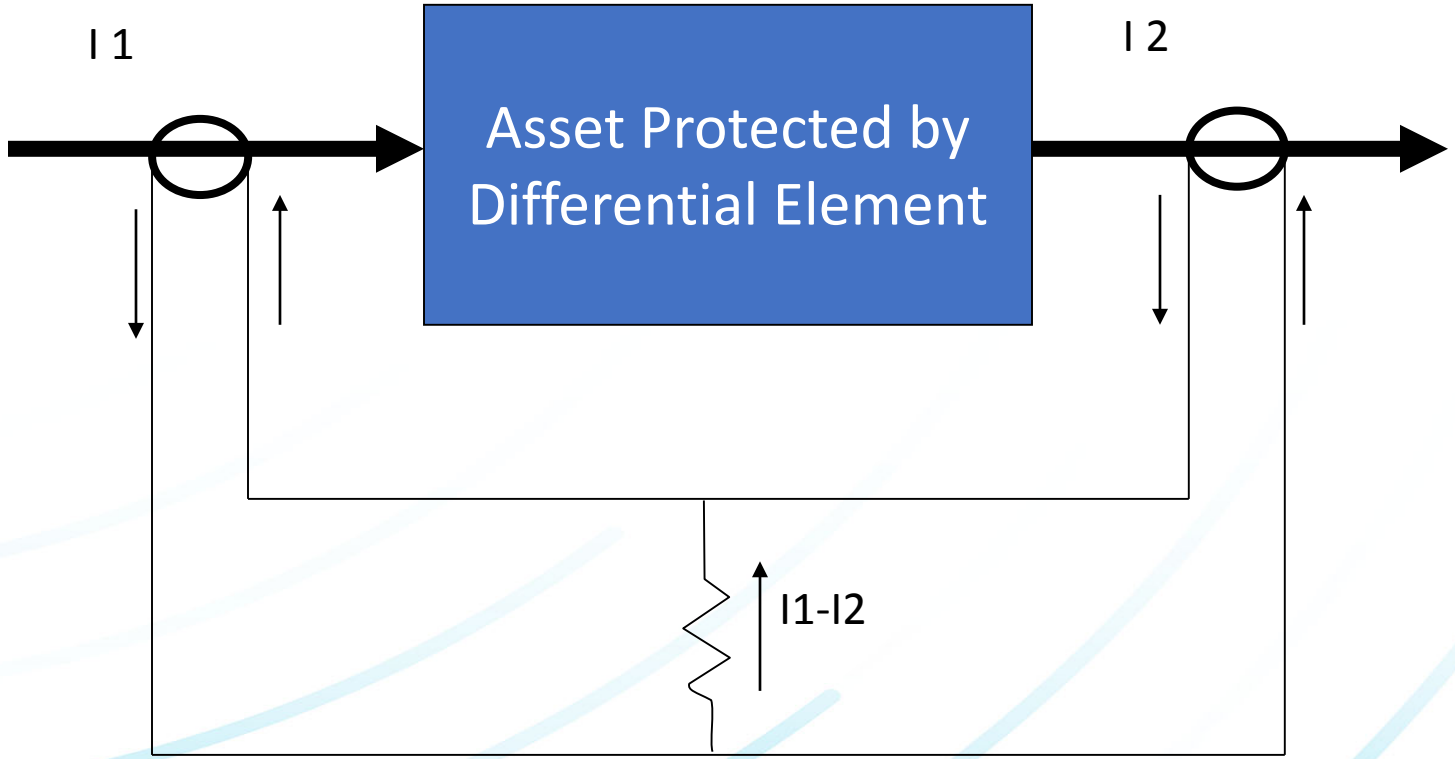

Review of Differential Protection

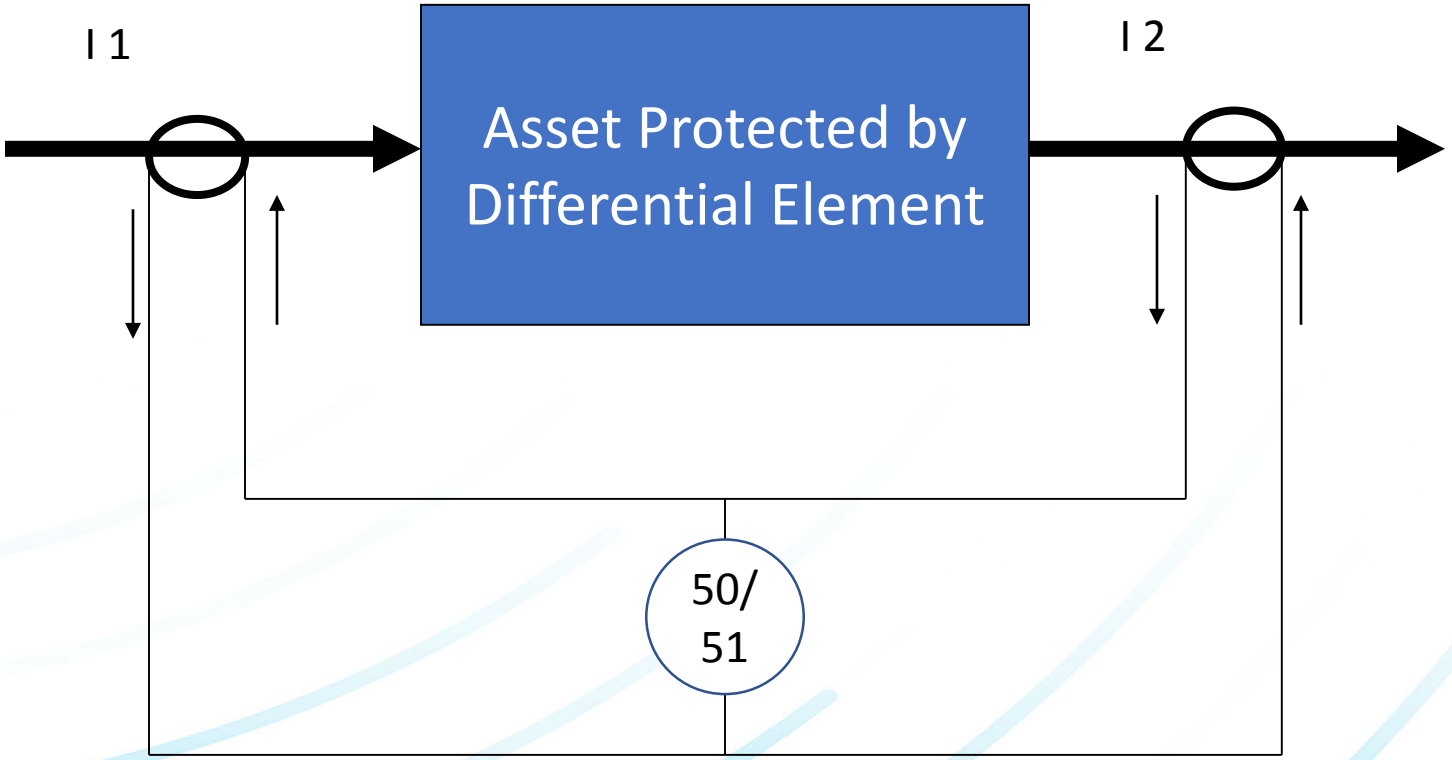

Review of Differential Protection

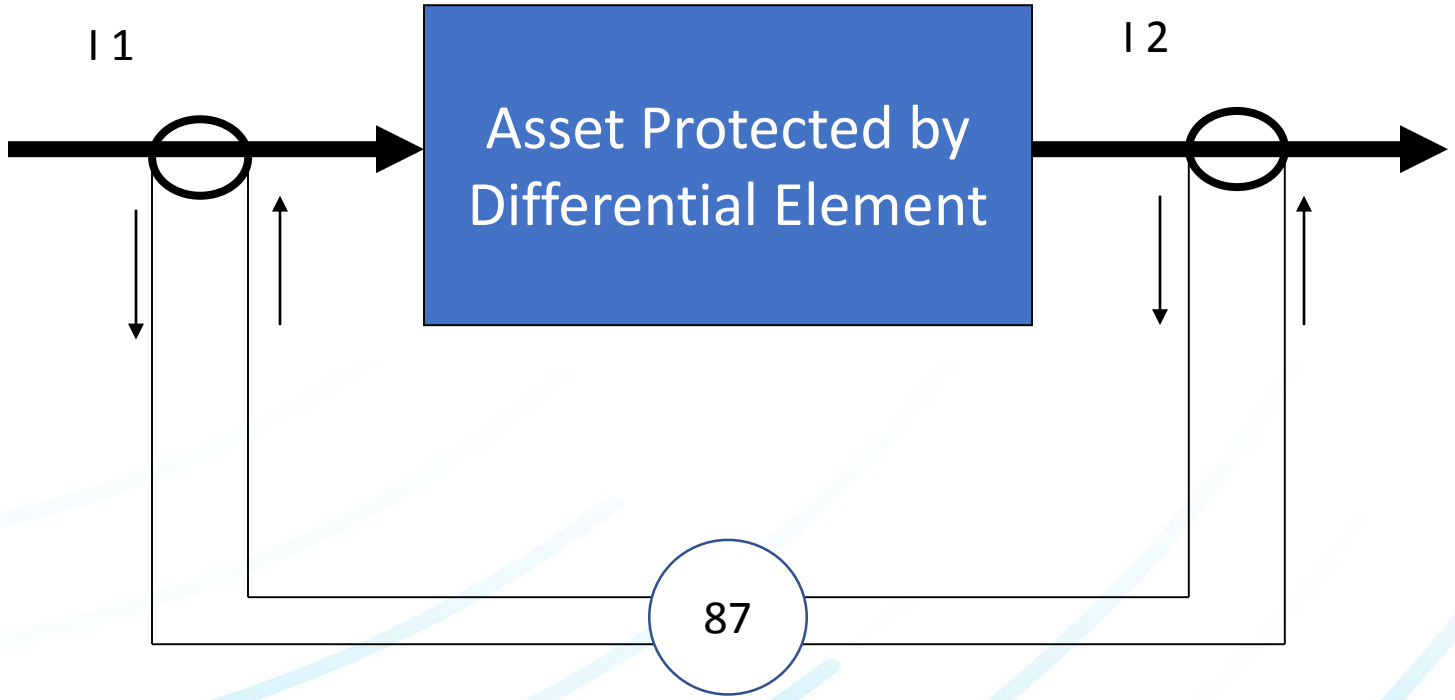

Review of Differential Protection

Bus Differential
Line Differential

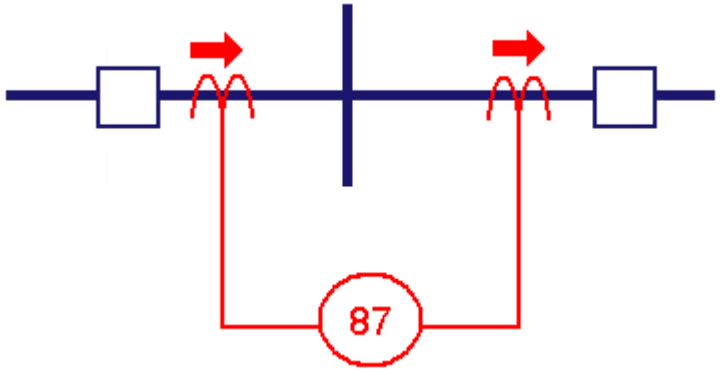

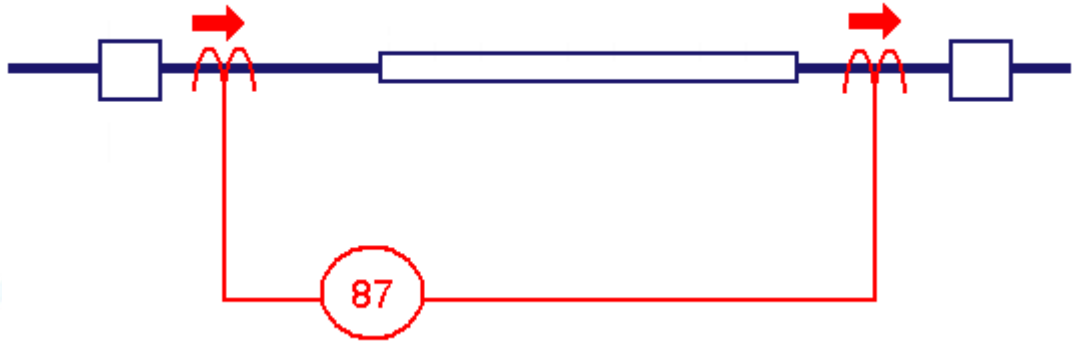

Transformer Differential Protection

100 MVA
115 – 34.5 kV
CT High Side and Low Side 1800:5 A

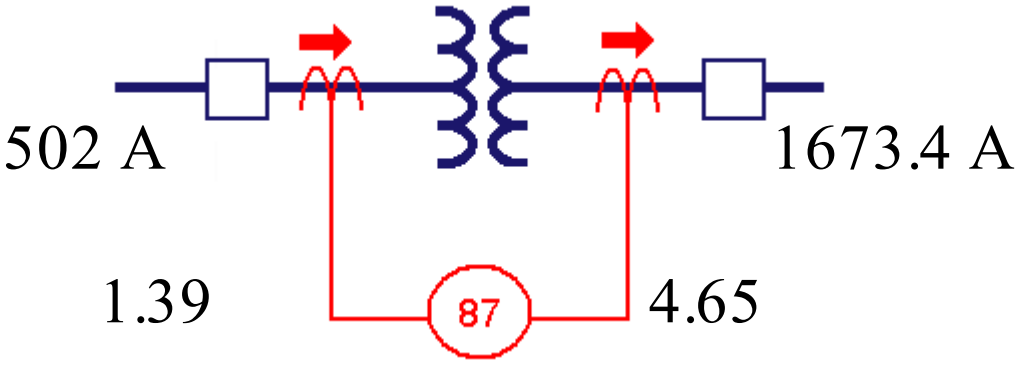

I1 – I2 = 3.26 A (or 1171.4 A!)

Solution – COMPENSATION!

87T- Compensation

An Example of Methodology:

Step 1 – Calculate the Rated Current

High Side 502 A
Low Side 1673 A

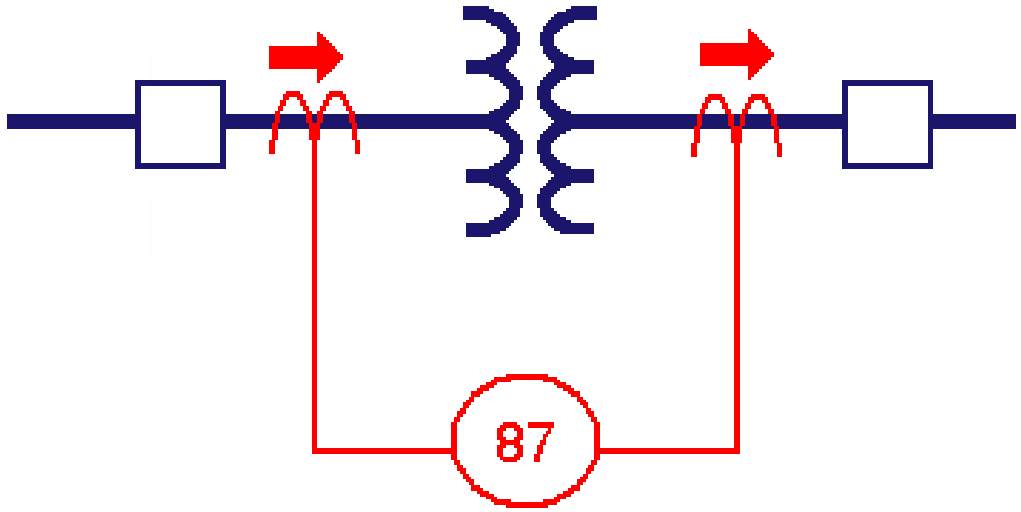

100 MVA
115 – 34.5 kV
CT High Side and Low Side 1800:5 A

87T- Compensation

Step 2 – Select a Reference Winding

Calculate the CT Margin of Each Side:
High Side 1800/502 = 3.58
Low Side 1800/1673 = 1.08

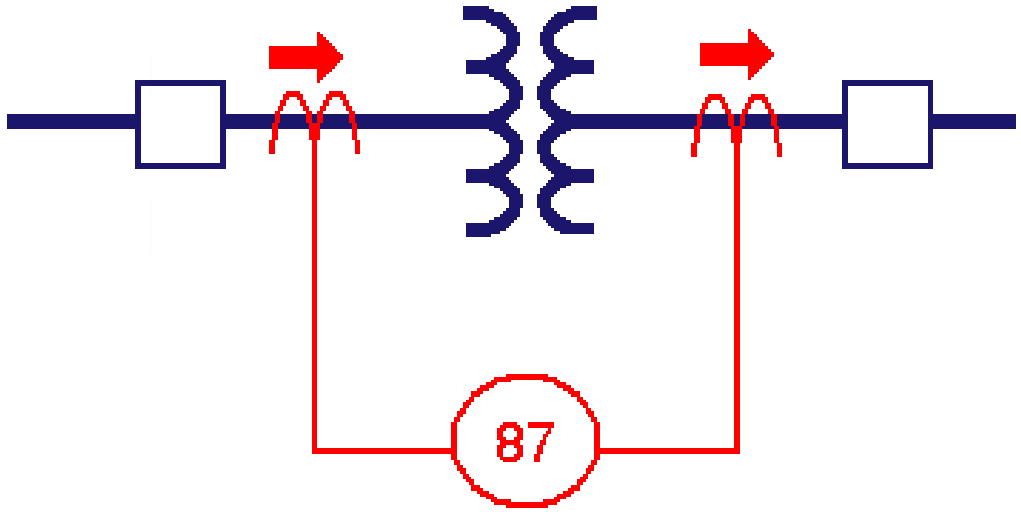

100 MVA	
115 – 34.5 kV	
CT High Side and Low Side	1800:5 A

Transformer Differential Protection

Step 3 – Calculate the Magnitude Compensation

High Side $\frac{I_{winding} \times V_{winding}}{I_{ref} \times V_{ref}} = \frac{1800 \times 115}{1800 \times 34.5} = 3.33$

Low Side =1.0

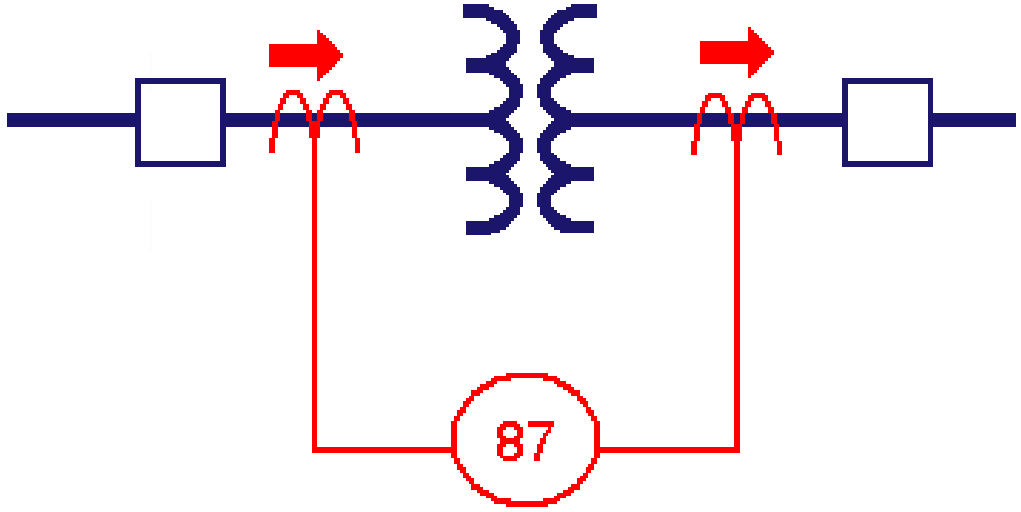

100 MVA
115 – 34.5 kV
CT High Side and Low Side 1800:5 A

87T- Compensation

Step 4 – Apply the Compensation

$I_{compensated} = K_{winding} \times I_{measured}$

Example:
Load 50 MVA
Current High Side: 251 A
Current Low Side: 836.7 A

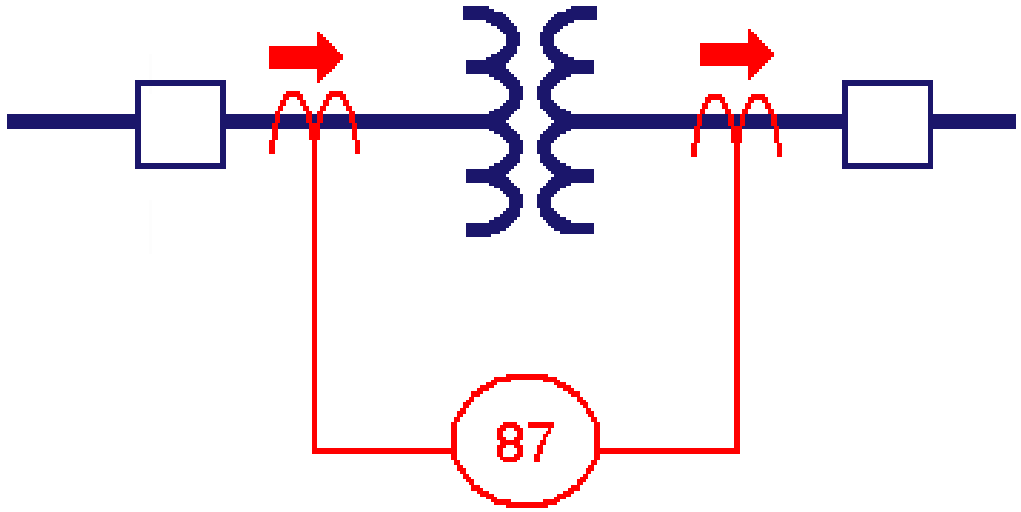

Compensated High Side: 3.33 x 251 = 835.8
Compensated Low Side: 1.00 x 836.7 = 836.7

$I1 - I2 \sim 0$ A

100 MVA	
115 – 34.5 kV	
CT High Side and Low Side	1800:5 A

87T– Percent Differential Characteristic

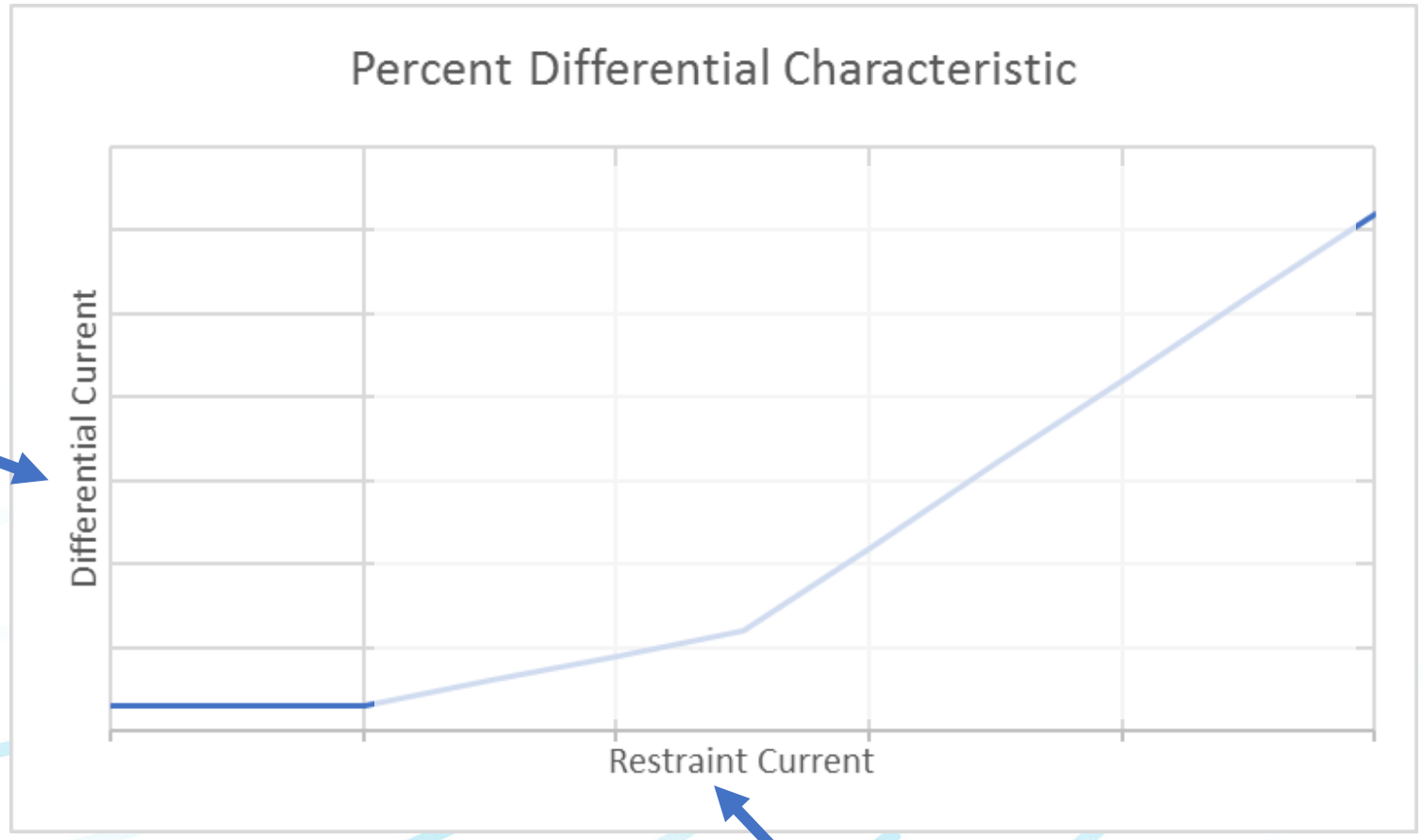

87T– Percent Differential Characteristic

$I1 - I2$

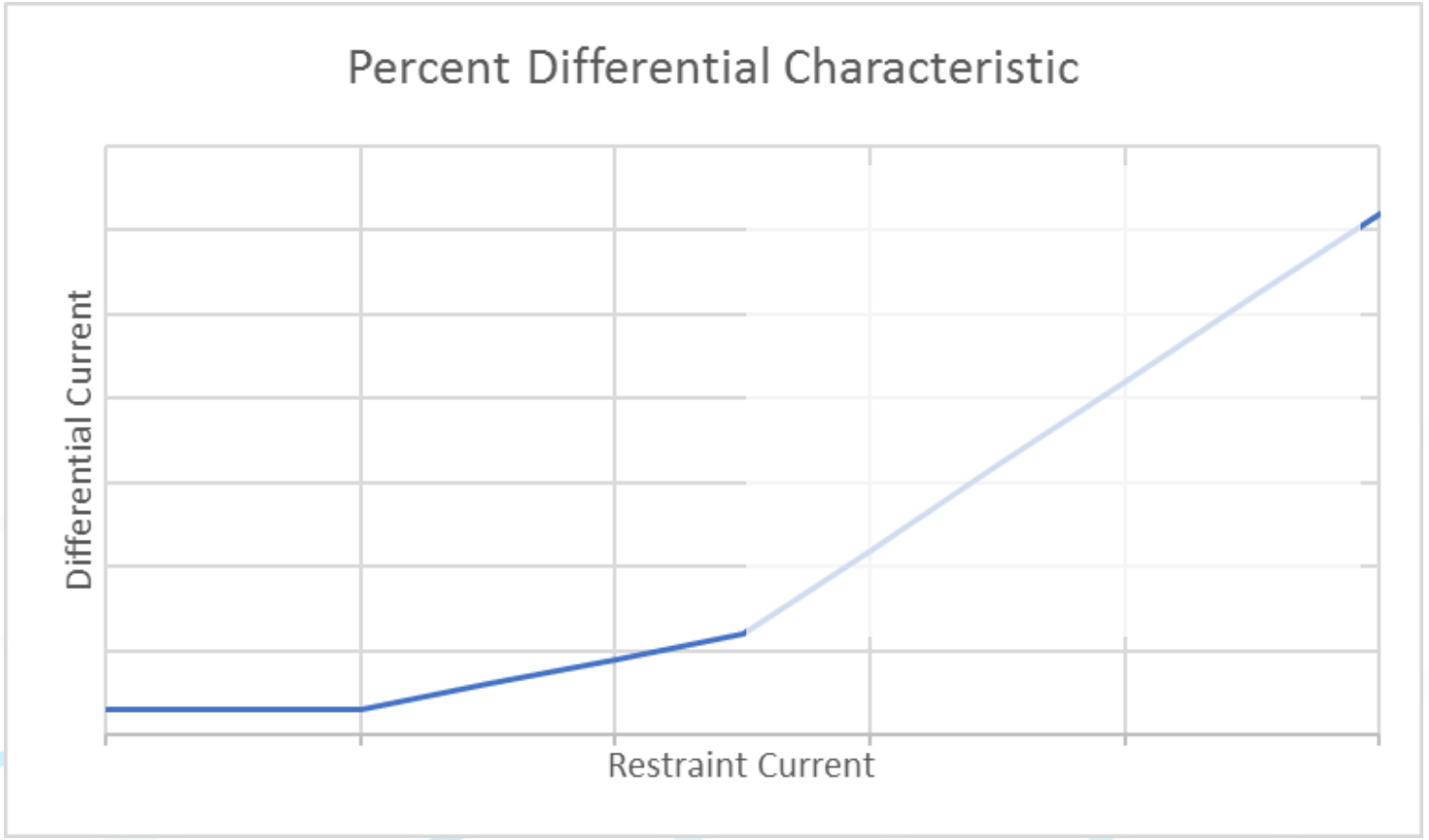

$f(I1, I2)$

87T– Percent Differential Characteristic

I1 – I2

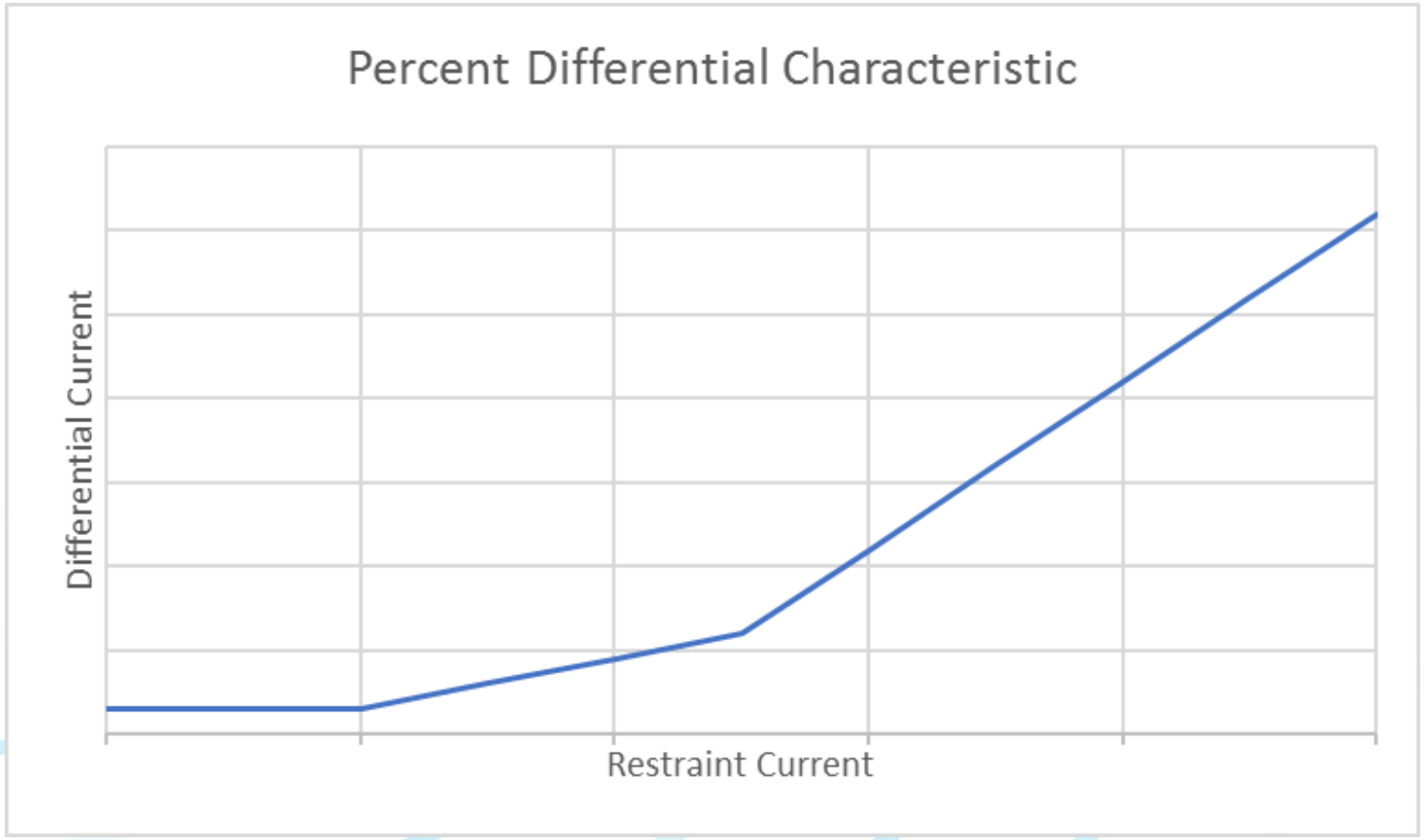

f(I1 I2)

87T – Percent Differential Characteristic

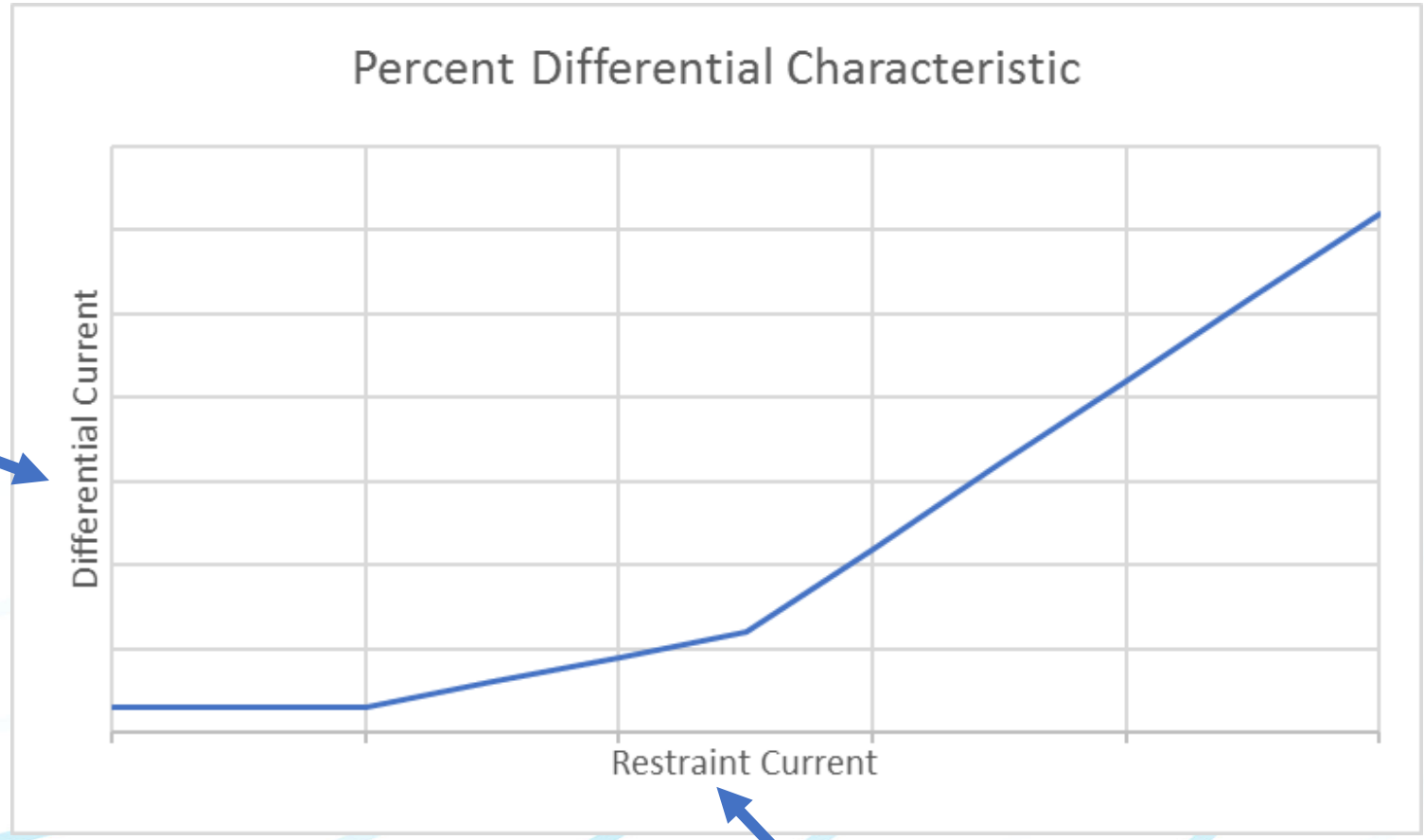

I1 – I2

f(I1, I2)

Compensated High Side: 3.33 x 251 = 835.8

Compensated Low Side: 1.00 x 836.7 = 836.7

I1 – I2 ~ 0 A

I1 – I2 > Dynamic Threshold

87T- Compensation

Phase and Zero-Sequence Compensations

Example:
Load 50 MVA
Current High Side: 251 A
Current Low Side: 836.7

Compensated High Side: 3.33 x 251 = 835.8
Compensated Low Side: 1.00 x 836.7 = 836.7

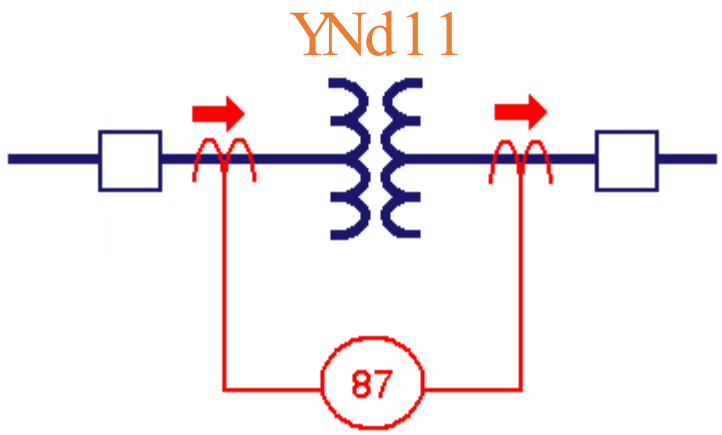

I1 – I2 = 432 A

Transformer Differential Protection

- The compensation method shown above is only one case.
- There are different methods leading to different compensation factors.
- Examples:

Winding	Relay M1	Relay M2		Relay M3	
		1 phase	3 phases	1 phase	3 phases
High Side	3.33	0.81	1.39	6.21	3.59
Low Side	1.00	2.68	4.64	1.86	1.08

Churchill Falls Terminal Station 2

- 840 MVA (3 x 280)
- 735 kV / 315 kV / 13.8 kV
- YNa0-D11

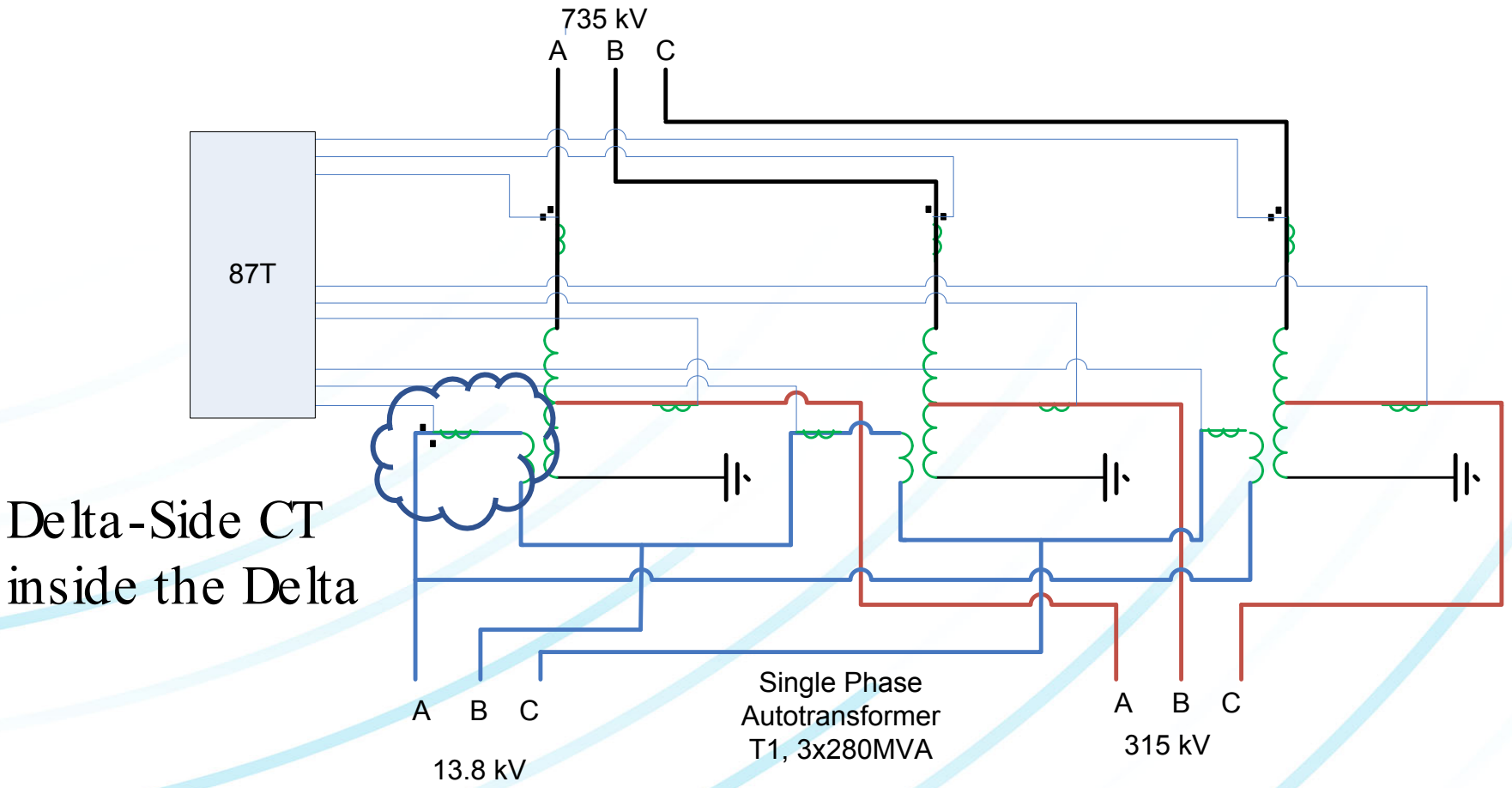

Churchill Falls Terminal Station 2

- Detailed Transformer Parameters

Transformer Rated MVA at ONAF2	840 MVA(3x 280 MVA)
HV Rated Voltage (VHV)	735 kV
LV Rated Voltage (VLV)	315 kV
Tertiary Rated Voltage(TLV)	13.8 kV
Transformer Winding Connection	YNa0-D11
HV CT Ratio (CTR_HV)	2000-1000:1 A
LV CT Ratio (CTR_LV)	4000-2000:1 A (87TA CT uses 2000:1 TAP)
Tertiary CT Ratio (CTR_TV)	2000-1000:5 A (Interposing CT 5:1 for 87TA relay only)
Neutral CT Ratio(CTRN)	2000-1000:1 A
Neutral CT Ratio(CTRN-GR)	600:5 A
HV Rated Current (IR_HV)	660 A
LV Rated Current (IR_LV)	1540 A
Tertiary Current (CTR_TV)	725 A

Solution 1 – Treat as Three-Phase Transformer

Most of the protection relays are designed to protect the three phase transformers. If the relay uses the transformer rated capacity (S MVA) as one of the parameters to calculate the compensation factor. **Angle compensation is not required since the CTs are inside the Delta.**

Vendor A Example.

$$Kamp_n = \frac{I_{norm_ctp}}{\frac{S_{T_REF} \bullet 1000}{\sqrt{3} \bullet V_m}}$$

Use 840 as the $S_{T\text{-}REF}$

$I_{rated_p} = \frac{S_{T_REF}}{\sqrt{3} \times V_{nom}}$ = 660 A at 735kV side

$I_{rated_T} = \frac{S_{T_REF}}{\sqrt{3} \times V_{nom}}$ = 35144 A at 13.8kV side, But we are using the CT inside Delta, the relay will see 20291 A.

How do we set the parameters so that the relay will see "Zero" current under this normal operation?

Solution 1- Treat as Three-Phase Transformer

So the rated voltage on the Tertiary side has to be set "13.8x√3", which is tricky since the rated voltage is 13.8 kV. Then the relay calculated compensation factor will be:

$$Kamp_{HV} = 3.031$$

$$Kamp_{TV} = 0.099$$

Now

I_{rated_p}*KampHV=660*3.031=2000.46

I_{rated_T}*KampTV=20291*3.031=2008.8

The relay will see zero differential current under normal load conditions.

Solution 2 – Treat as Single-Phase Transformer

Set the relay as
ST-REF=280 MVA; VHV=424.4 kV, VLV=181.9 kV, VTV=13.8 kV

$$I_{rated_p} = \frac{S_{T_REF}}{V_{nom}} = 660\text{A at } 735\text{kV side}$$

$$I_{rated_T} = \frac{S_{T_REF}}{V_{nom}} = 20289\text{A at } 13.8\text{kV side}$$

$$Kamp_{HV} = 5.242$$
$$Kamp_{TV} = 0.171$$

Now
I_{rated_p}*KampHV = 660*5.242 = 3459.72 A
I_{rated_T}*KampTV = 20291*0.171 = 3469.76 A

Again, the relay will see "Zero" differential current under this normal operation condition!

Restricted Earth Fault (REF)

- Transformer Differential is often blind to faults near the neutral point.
- REF is a differential protection function (I1-I2)
  - I1 = Ia + Ib + Ic
  - I2 = Iground

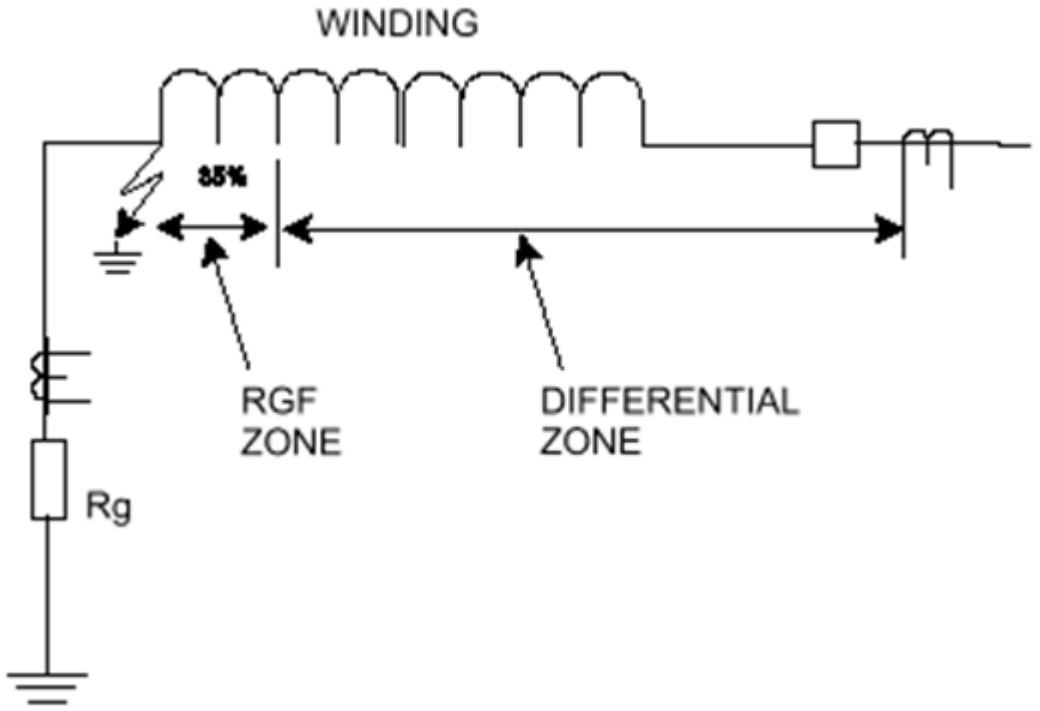

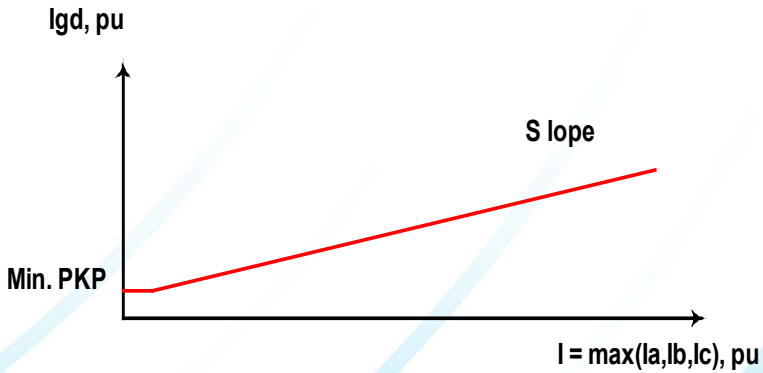

Overexcitation

- Power Transformers operate near the inflexion of the iron saturation curve.
- Small increase of voltage = large increase of excitation current
- Volt / Hertz is proportional to the flux in the transformer

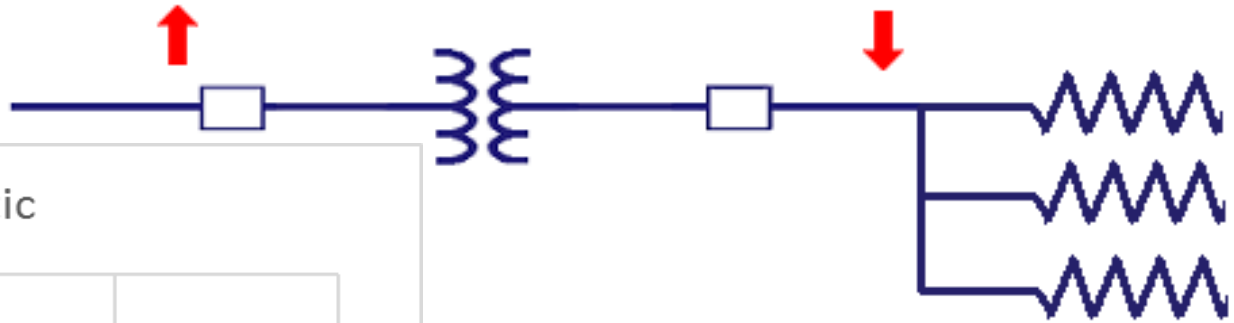

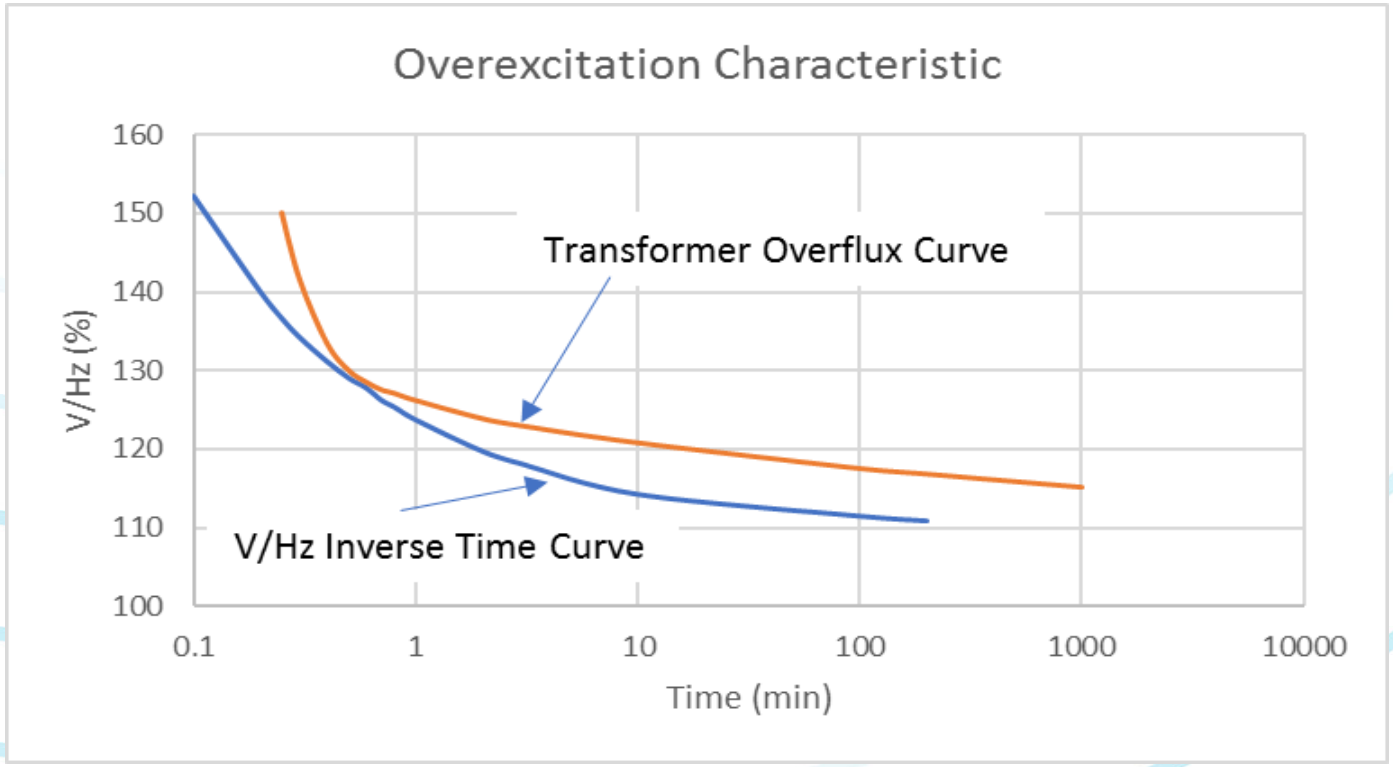

Conclusions

- Know your relay manufacturer
- Know your relay model
- Know why and how to protect your three single-phase power transformer

Thank You

Questions?