Symmetrical Components and Fault Currents

$$
\begin{aligned}
\mathbf{v}_{abc} &= \begin{bmatrix} V_0 \\ V_0 \\ V_0 \end{bmatrix} + \begin{bmatrix} V_1 \\ \alpha^2 V_1 \\ \alpha V_1 \end{bmatrix} + \begin{bmatrix} V_2 \\ \alpha V_2 \\ \alpha^2 V_2 \end{bmatrix} \\
&= \begin{bmatrix} 1 & 1 & 1 \\ 1 & \alpha^2 & \alpha \\ 1 & \alpha & \alpha^2 \end{bmatrix} \begin{bmatrix} V_0 \\ V_1 \\ V_2 \end{bmatrix} \\
&= \mathbf{A}\mathbf{v}_{012}
\end{aligned}
$$

Terrence Smith

Review of Phasors

Origin of Phasors

> Rotating rotors = alternating currents & voltages

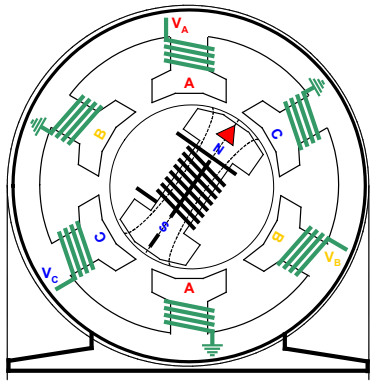

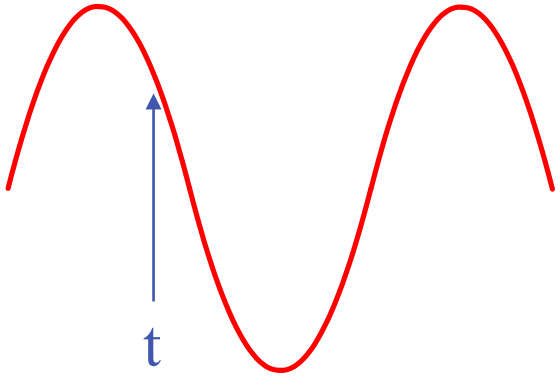

=

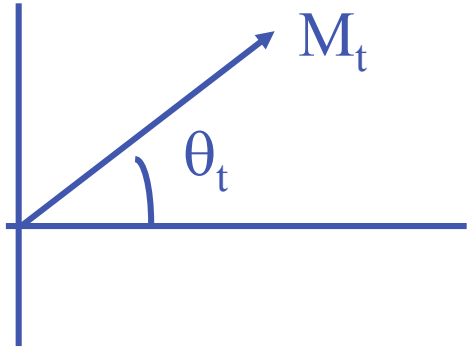

> Phasors are well established means of representing ac circuits

Charles Proteus Steinmetz (1865-1923)
Complex Quantities and their use in Electrical Engineering; Charles Proteus Steinmetz; Proceedings of the International Electrical Congress, Chicago, IL; AIEE Proceedings, 1893; pp.33-74.

Phasors

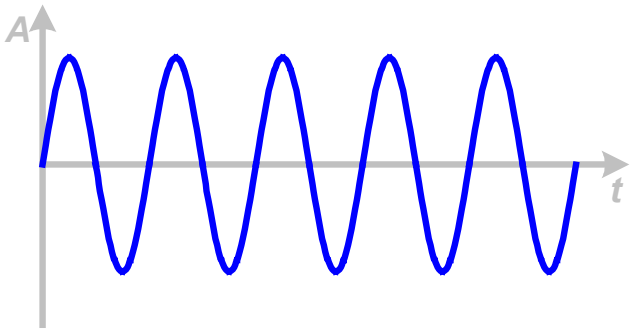

Sine wave

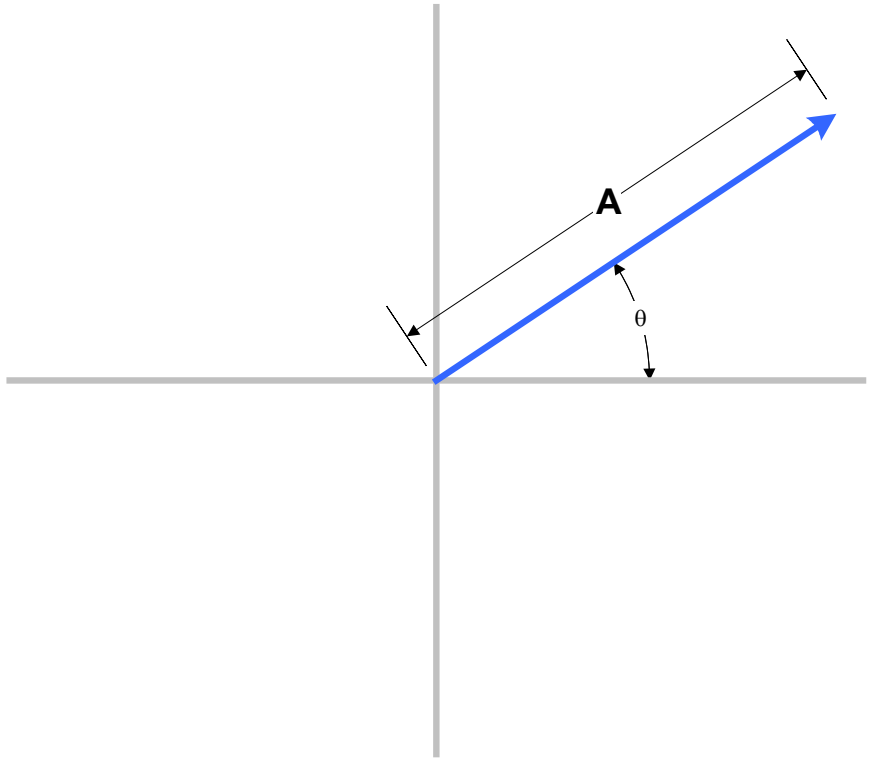

Phasor representation of sine wave

Addition of Phasors

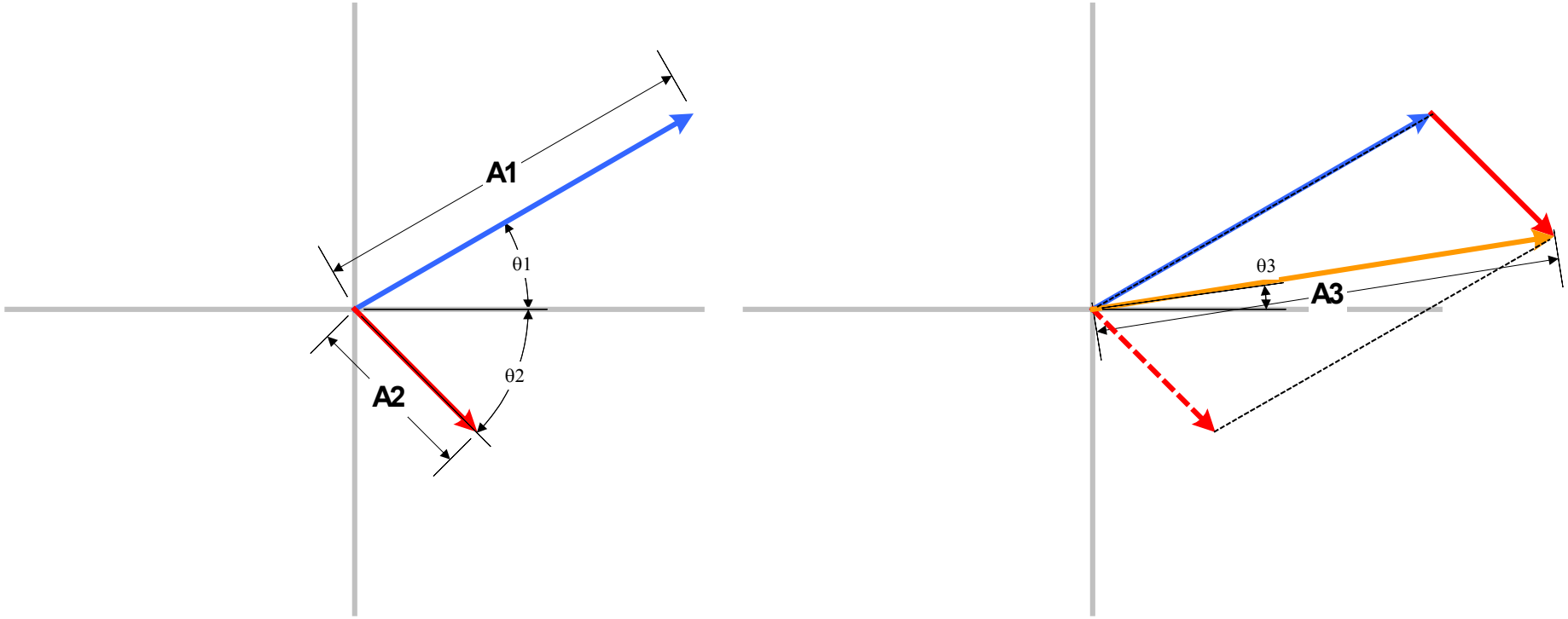

Multiplication of phasors

Multiplying two phasors results in another phasor. The magnitude of the new phasor is the product of the magnitude of the two original phasors. The angle of the new phasor is the sum of the angles of the two original phasors.

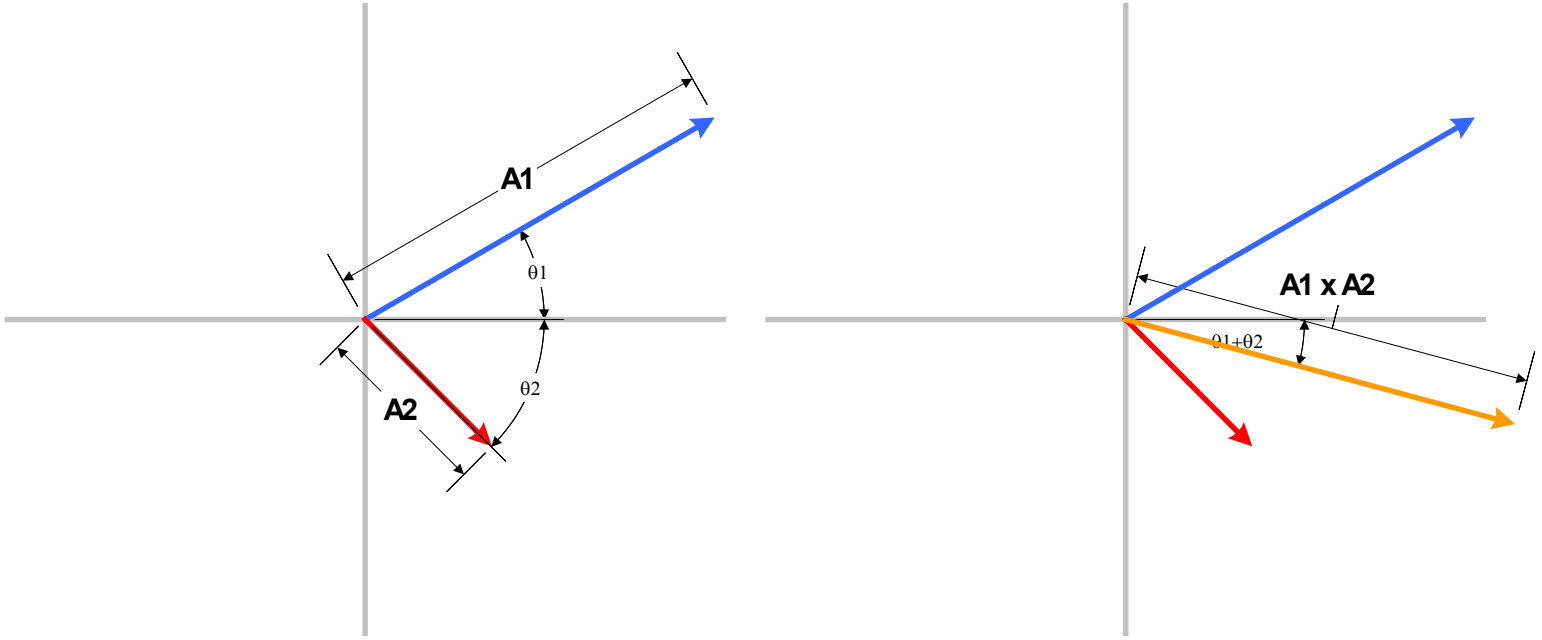

Review Of Symmetrical Components

Symmetrical and Non-Symmetrical Systems:

Symmetrical System:

- Counter-clockwise rotation
- All current vectors have equal amplitude
- All voltage phase vectors have equal amplitude
- All current and voltage vectors have 120 degrees phase shifts and a sum of 0v.

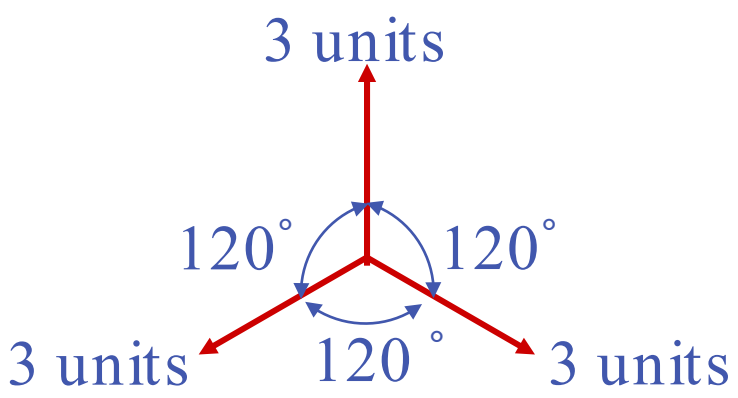

Non-Symmetrical System:

- Fault or Unbalanced condition
- If one or more of the symmetrical system conditions is not met

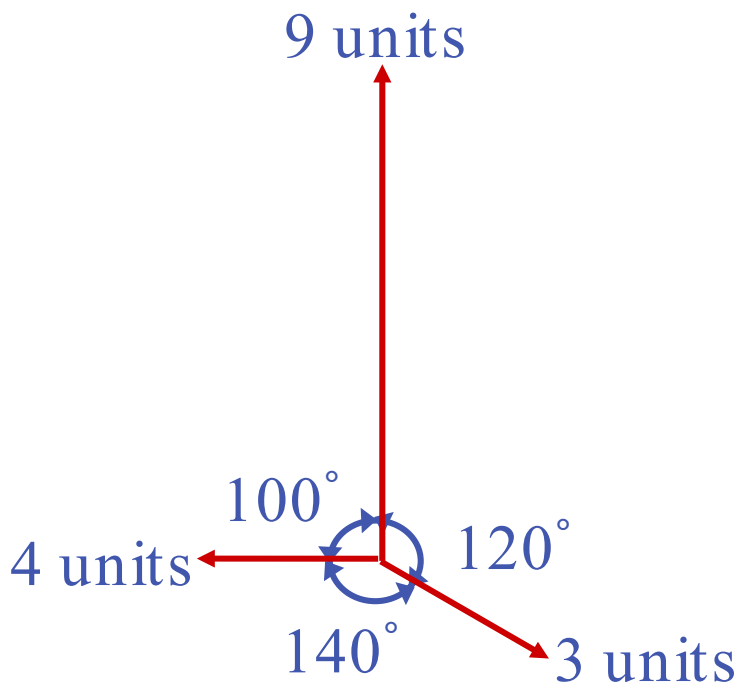

Symmetrical Components:

Positive Sequence (Always Present)

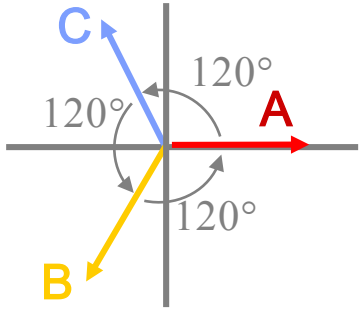

- A-B-C **Counter-clockwise** phase rotation
- All phasors with equal magnitude
- All phasors displaced 120 degrees apart

Zero Sequence

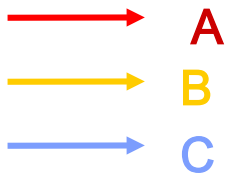

- No Rotation Sequence
- All phasors with equal magnitude
- All phasors are in phase

Negative Sequence

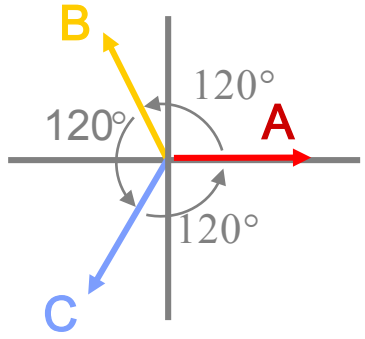

- A-C-B **counter-clockwise** phase rotation
- All phasors with equal magnitude
- All phasors displaced 120 degrees apart

Symmetrical Components:

Positive Sequence Component: $I_1 = \frac{1}{3}(I_a + \alpha I_b + \alpha^2 I_c)$ $V_1 = \frac{1}{3}(V_a + \alpha V_b + \alpha^2 V_c)$

Negative Sequence Component: $I_2 = \frac{1}{3}(I_a + \alpha^2 I_b + \alpha I_c)$ $V_2 = \frac{1}{3}(V_a + \alpha^2 V_b + \alpha V_c)$

Zero Sequence Component: $I_0 = \frac{1}{3}(I_a + I_b + I_c)$ $V_0 = \frac{1}{3}(V_a + V_b + V_c)$

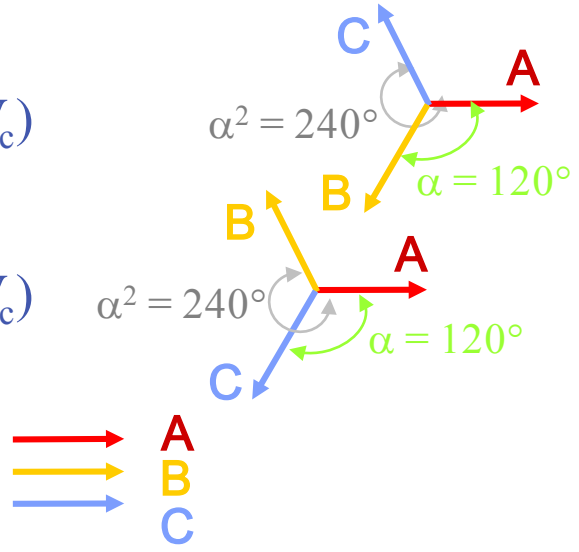

Unbalanced Line-to-Neutral Phasors:

$I_a = I_1 + I_2 + I_0$ $V_a = V_1 + V_2 + V_0$

$I_b = \alpha^2 I_1 + \alpha I_2 + I_0$ $V_b = \alpha^2 V_1 + \alpha V_2 + V_0$

$I_c = \alpha I_1 + \alpha^2 I_2 + I_0$ $V_c = \alpha V_1 + \alpha^2 V_2 + \alpha V_0$

α =Phasor @ +120°

α^2 =Phasor @ 240°

Calculating Symmetrical Components:

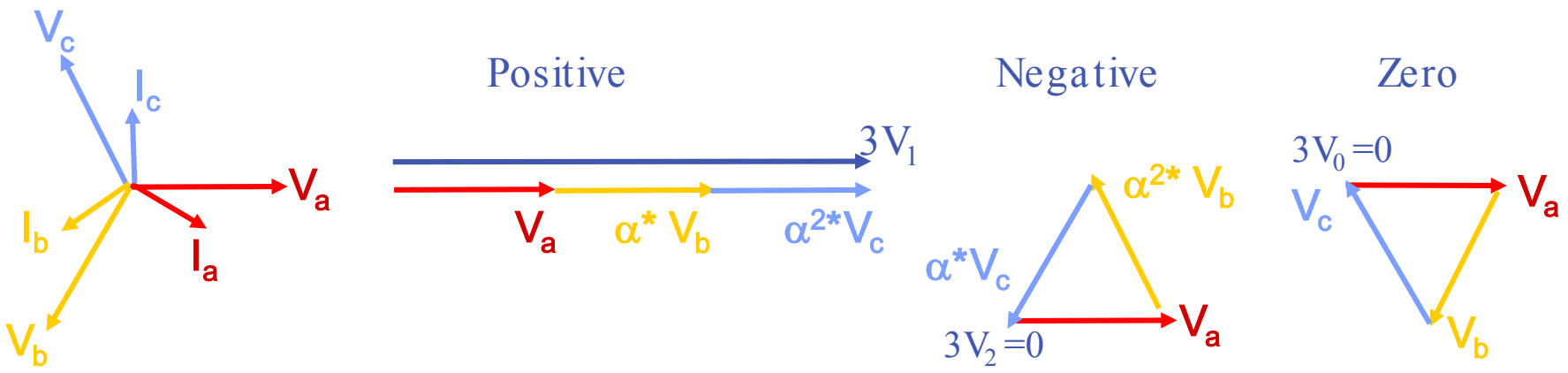

Three-Phase Balanced / Symmetrical System

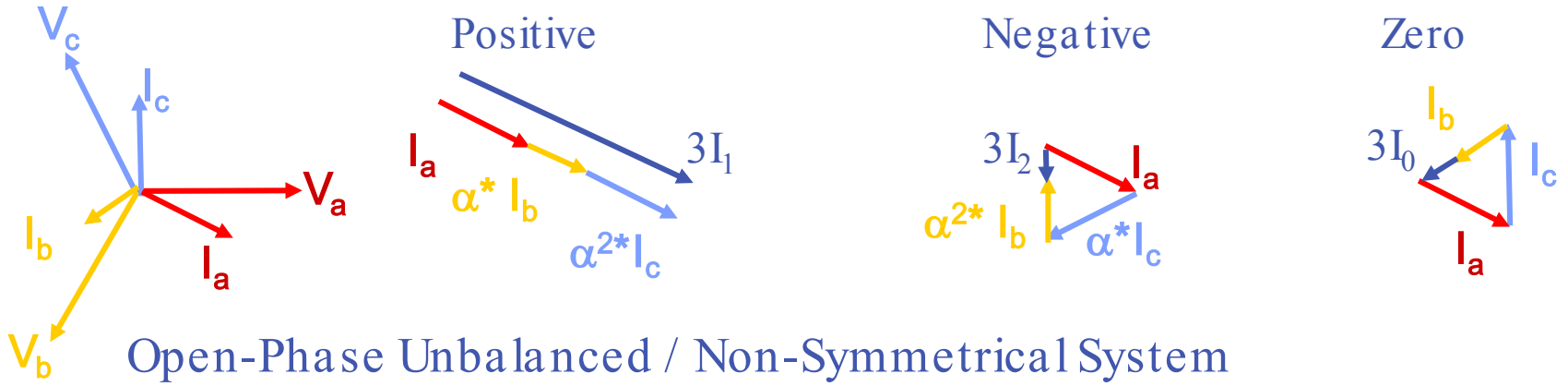

Open-Phase Unbalanced / Non-Symmetrical System

Symmetrical Components

Example: Perfectly Balanced & ABC Rotation

$I_0 = 1/3(I_a + I_b + I_c)$ $\quad$ $V_0 = 1/3(V_a + V_b + V_c)$

$I_1 = 1/3(I_a + aI_b + a^2I_c)$ $\quad$ $V_1 = 1/3(V_a + aV_b + a^2V_c)$

$I_2 = 1/3(I_a + a^2I_b + aI_c)$ $\quad$ $V_2 = 1/3(V_a + a^2V_b + aV_c)$

$a = 1 \angle 120^o$ $\quad$ $a^2 = 1 \angle 240^o$

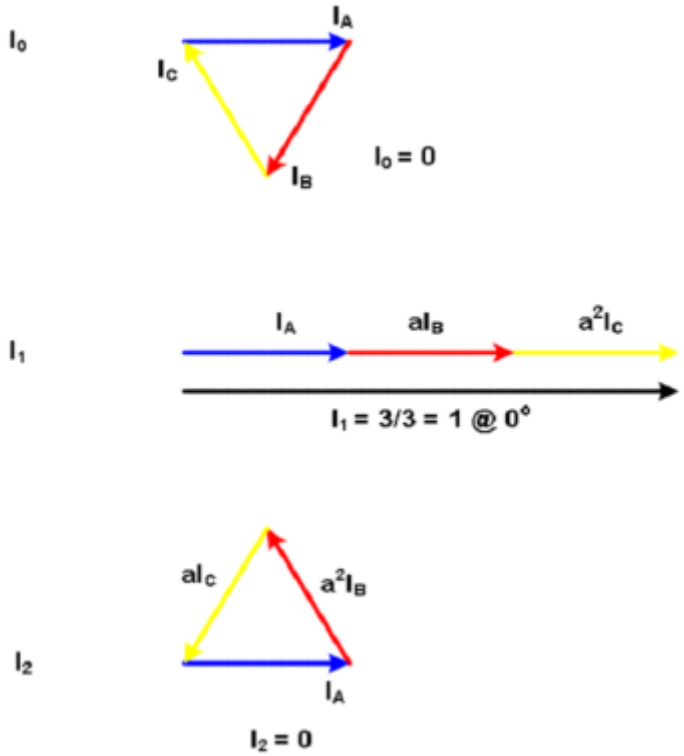

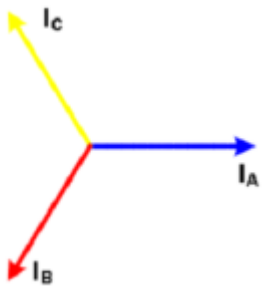

Result: 100% I1 (Positive Sequence Component)

Symmetrical Components

Example: B-Phase Rolled & ABC Rotation

$I_0 = 1/3(I_a + I_b + I_c)$ $\quad$ $V_0 = 1/3(V_a + V_b + V_c)$

$I_1 = 1/3(I_a + aI_b + a^2I_c)$ $\quad$ $V_1 = 1/3(V_a + aV_b + a^2V_c)$

$I_2 = 1/3(I_a + a^2I_b + aI_c)$ $\quad$ $V_2 = 1/3(V_a + a^2V_b + aV_c)$

$a = 1 \angle 120^\circ$ $\quad$ $a^2 = 1 \angle 240^\circ$

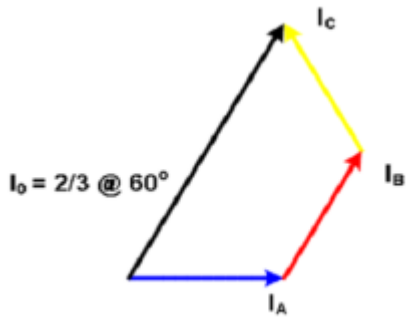

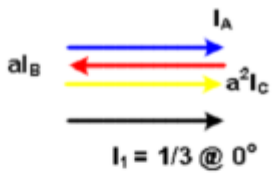

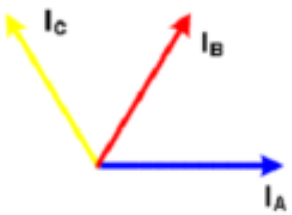

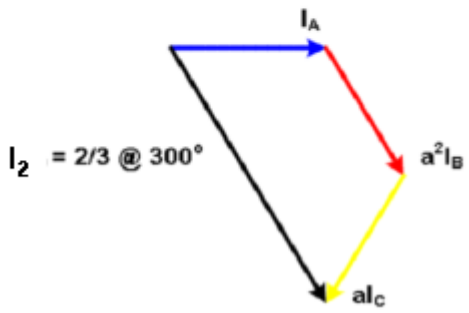

Result: 33% I1, 66% I0 and 66% I2

Symmetrical Components

Example: B-Phase & C-Phase Rolled & ABC Rotation

$I_0 = 1/3(I_a + I_b + I_c)$ $\quad$ $V_0 = 1/3(V_a + V_b + V_c)$

$I_1 = 1/3(I_a + aI_b + a^2I_c)$ $\quad$ $V_1 = 1/3(V_a + aV_b + a^2V_c)$

$I_2 = 1/3(I_a + a^2I_b + aI_c)$ $\quad$ $V_2 = 1/3(V_a + a^2V_b + aV_c)$

$a = 1 \angle 120^o$ $\quad$ $a^2 = 1 \angle 240^o$

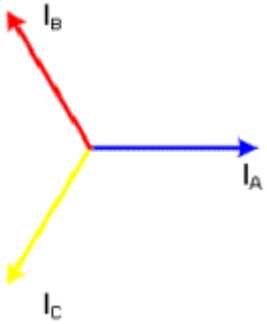

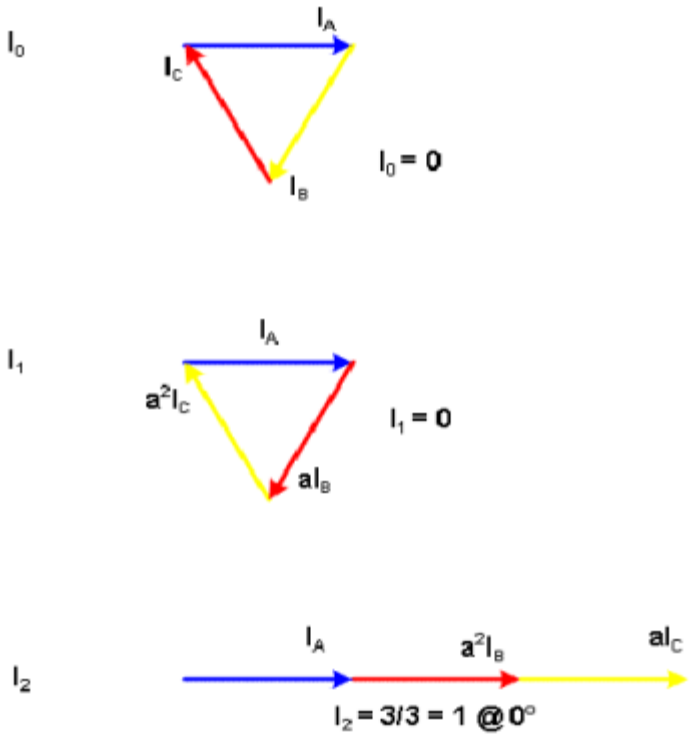

Result: 100% I2 (Negative Sequence Component)

Power System Faults

Fault Analysis - Example:

For Fault Condition:

Positive Sequence Component, I_1: $I_1 = 1/3(I_a + \alpha I_b + \alpha^2 I_c)$

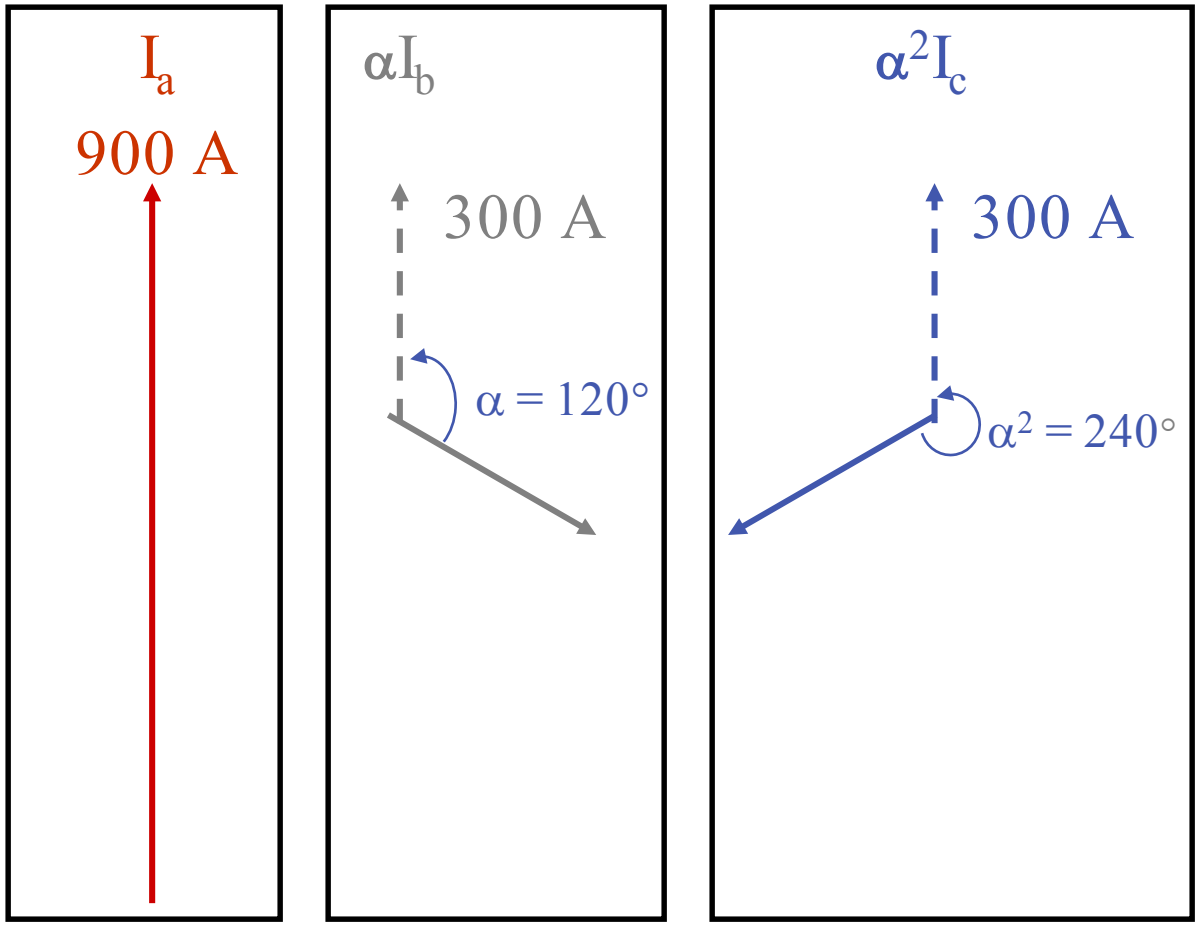

Power System Faults

Fault Analysis - Example

For Fault Condition:

Positive Sequence Component, I_1:

$I_1 = 1/3(I_a + \alpha I_b + \alpha^2 I_c)$

$= 1/3(900\ A + 300\ A + 300\ A)$

$= 1/3(1500\ A)$

$I_1 = 500$ Amps

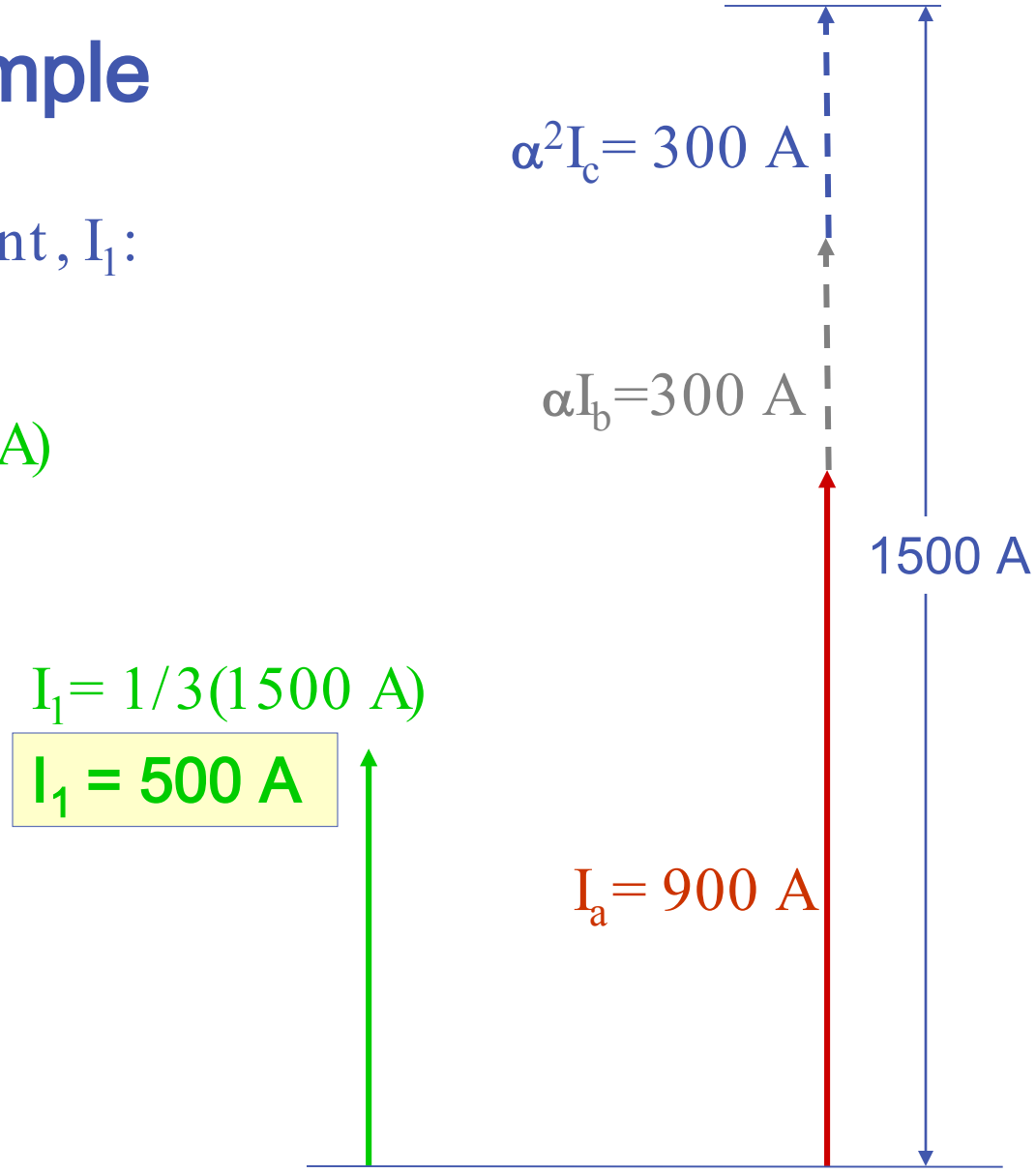

Power System Faults

Fault Analysis – Example:

For Fault Condition:

Negative Sequence Component, I_2: $I_2 = 1/3(I_a + \alpha^2 I_b + \alpha I_c)$

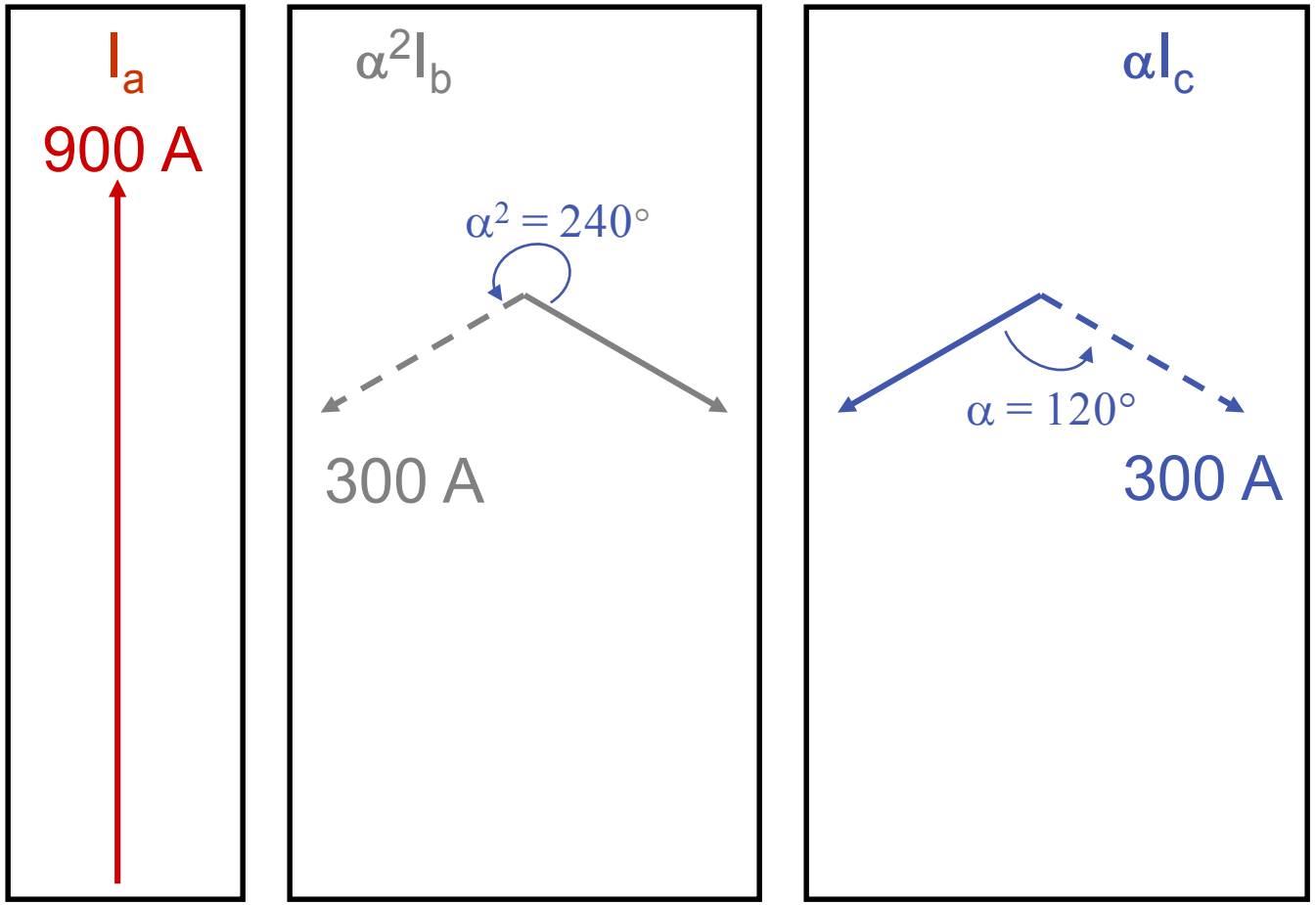

Power System Faults

Fault Analysis - Example :

For Fault Condition:

Negative Sequence Component, I_2:

$$I_2 = 1/3(I_a+\alpha^2 I_b+\alpha I_c)$$

$$= 1/3(600\ A)$$

$$I_2 = 200\ Amps$$

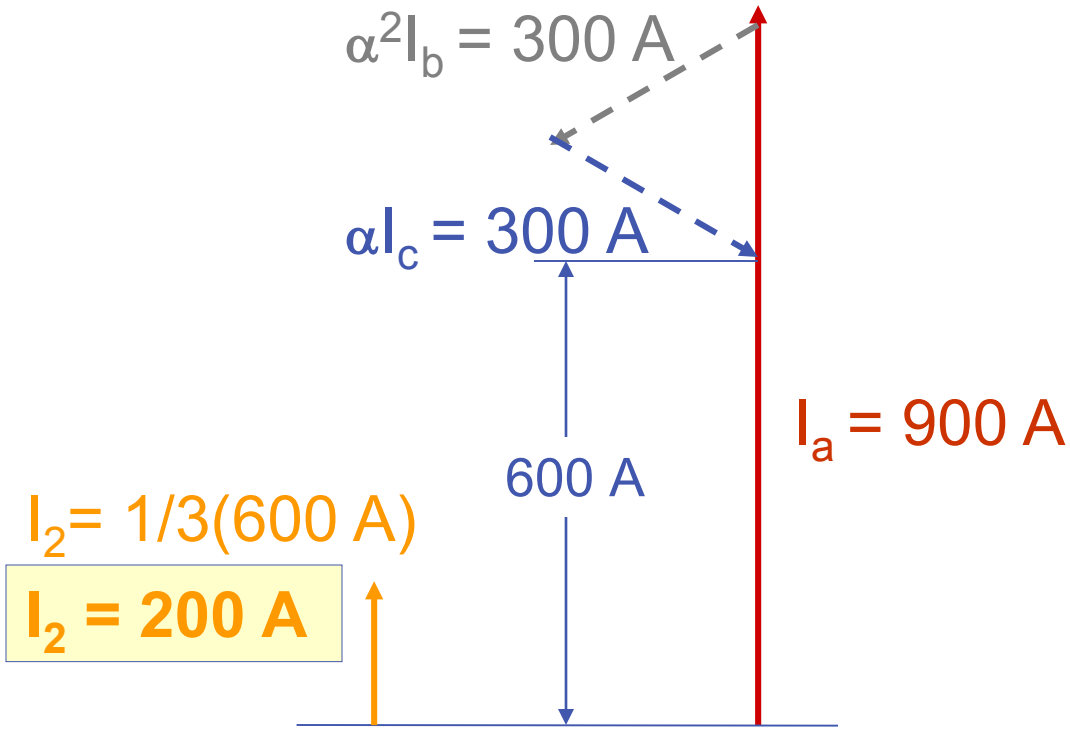

Power System Faults

Fault Analysis - Example:

For Fault Condition:

Zero Sequence Component, I_0: $I_0 = 1/3(I_a + I_b + I_c)$

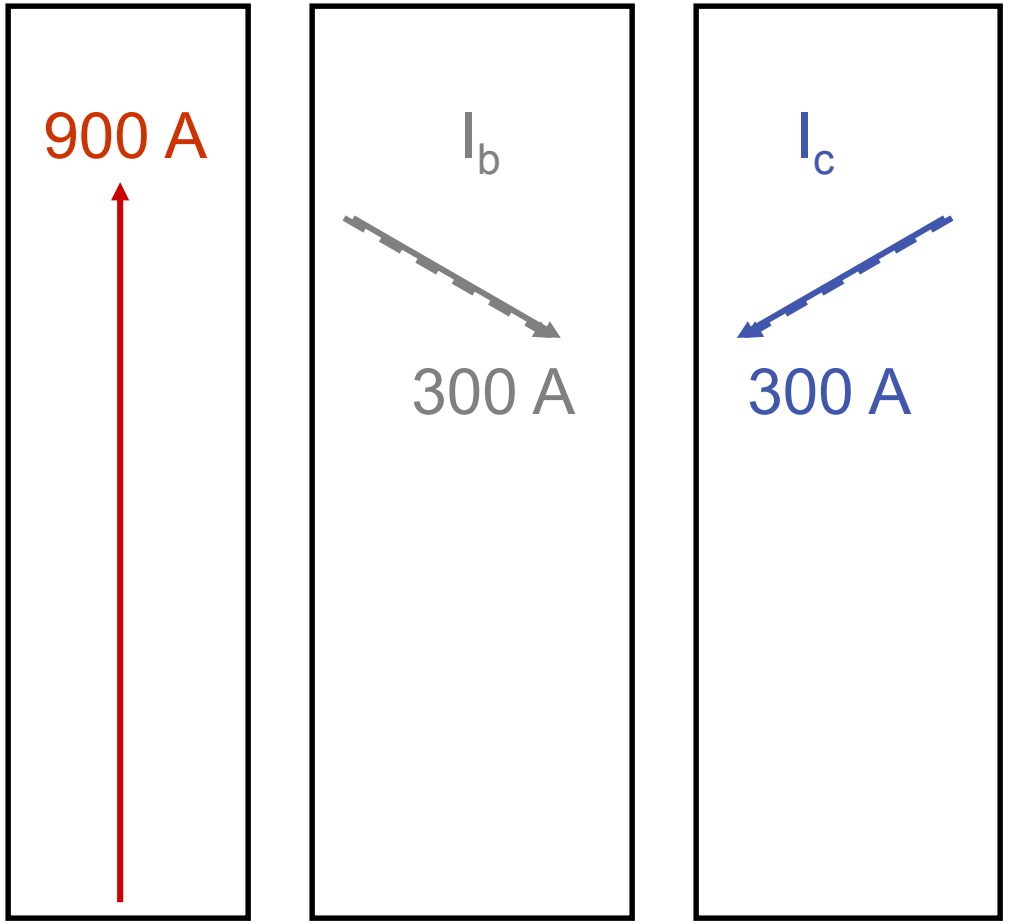

Power System Faults

Fault Analysis – Example:

For Fault Condition:

Zero Sequence Component, I_0:

$I_0 = 1/3(I_a + I_b + I_c)$

$= 1/3(600\ A)$

$I_0 = 200$ Amps

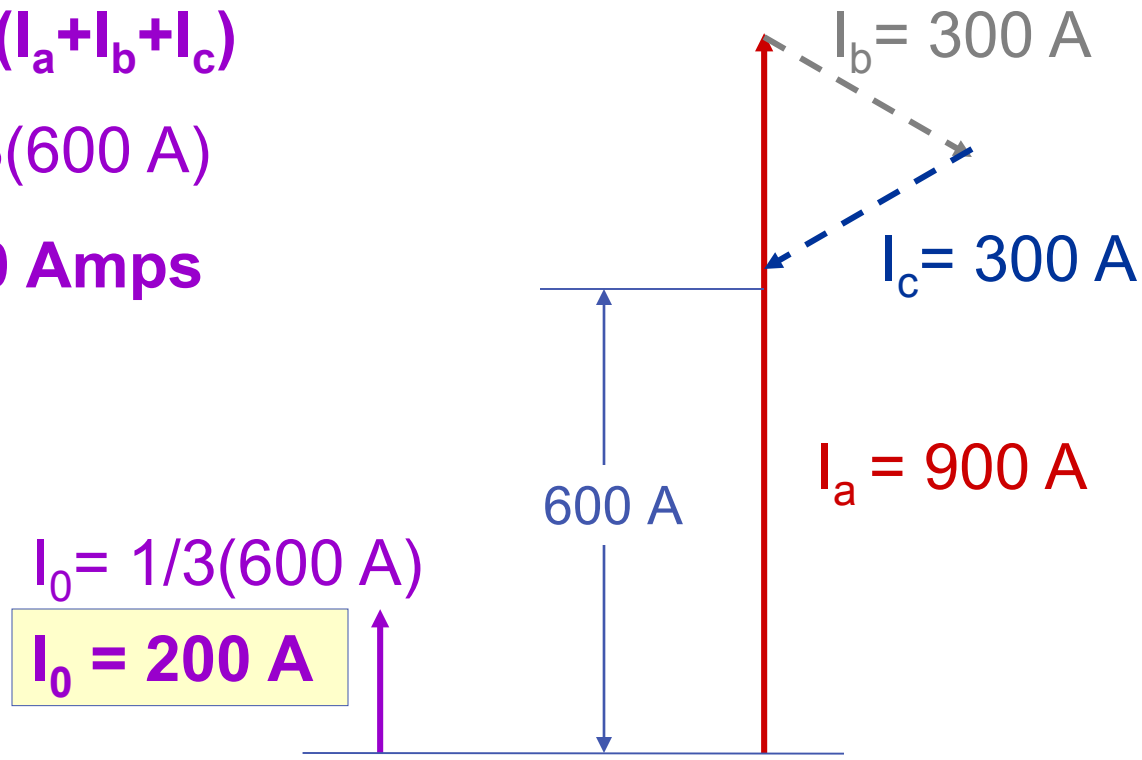

Fault Currents

Power System

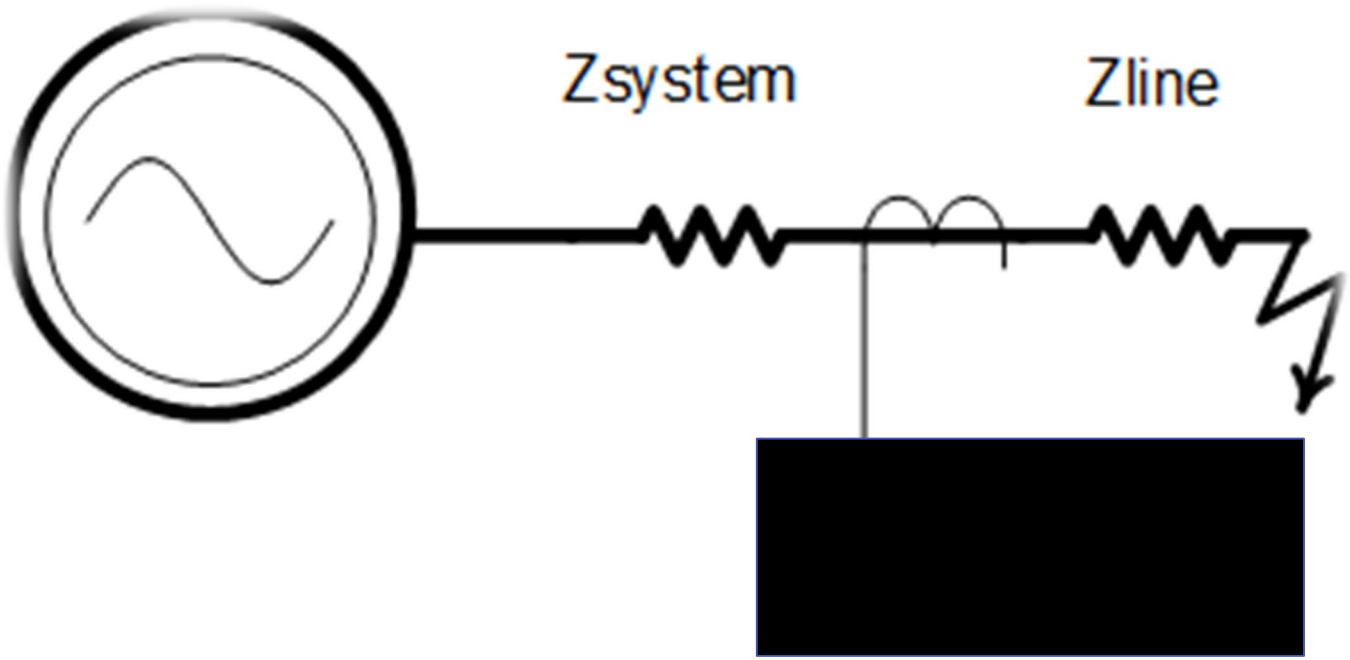

Sequence Networks

- Where is sequence voltage highest?
- What generates negative and zero sequence currents?

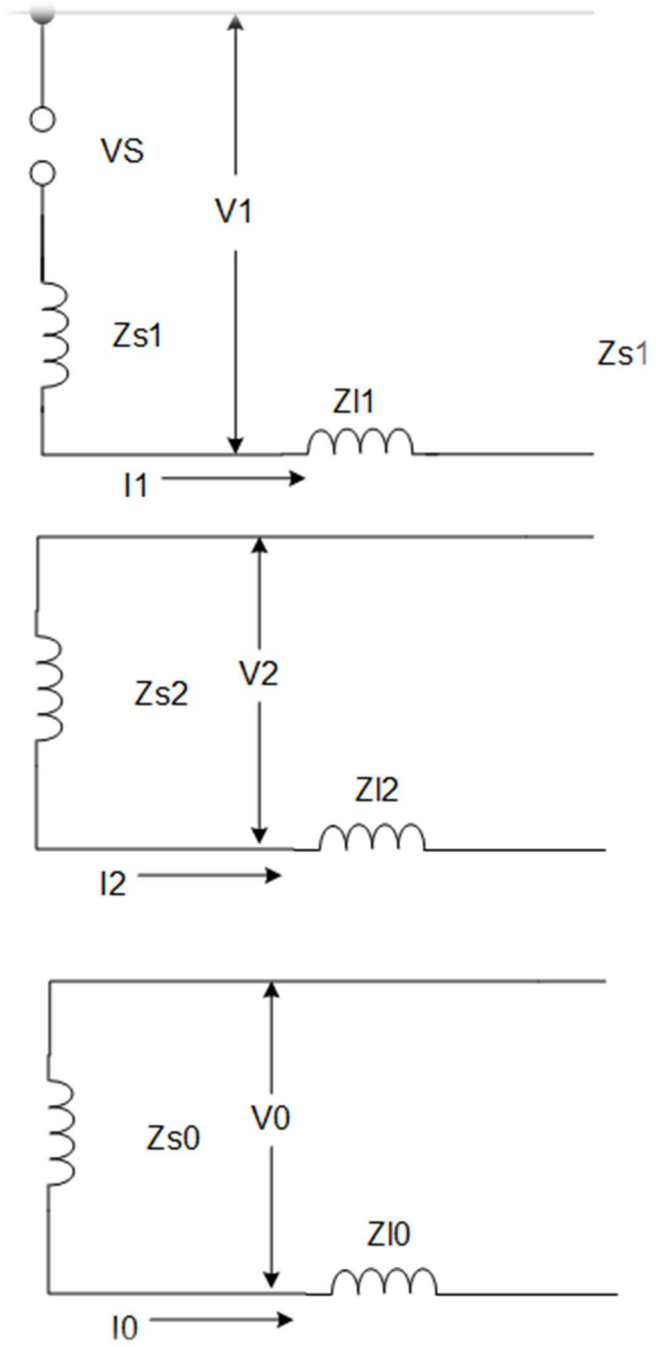

How do we connect the sequence networks for a particular fault?

- Assuming a Phase to Ground fault on a solidly grounded system, what do we know about the fault current?
  - Faulted phase is very large
  - Un-faulted phases are small, almost zero.

How do we connect the sequence networks for a particular fault?

- $Ia = x$
- $Ic = Ib = 0$
- $Ia + Ib + Ic = x = I0$
- $Ia + a * Ib + a^2 * IC = x = I1$
- $Ia + a^2 Ib + a Ic = x = I2$
- $I1 = I2 = I0$

How do we connect so that I1=I2=I0?

- The sequence networks have to be in series for a phase to ground fault on a solidly grounded system.

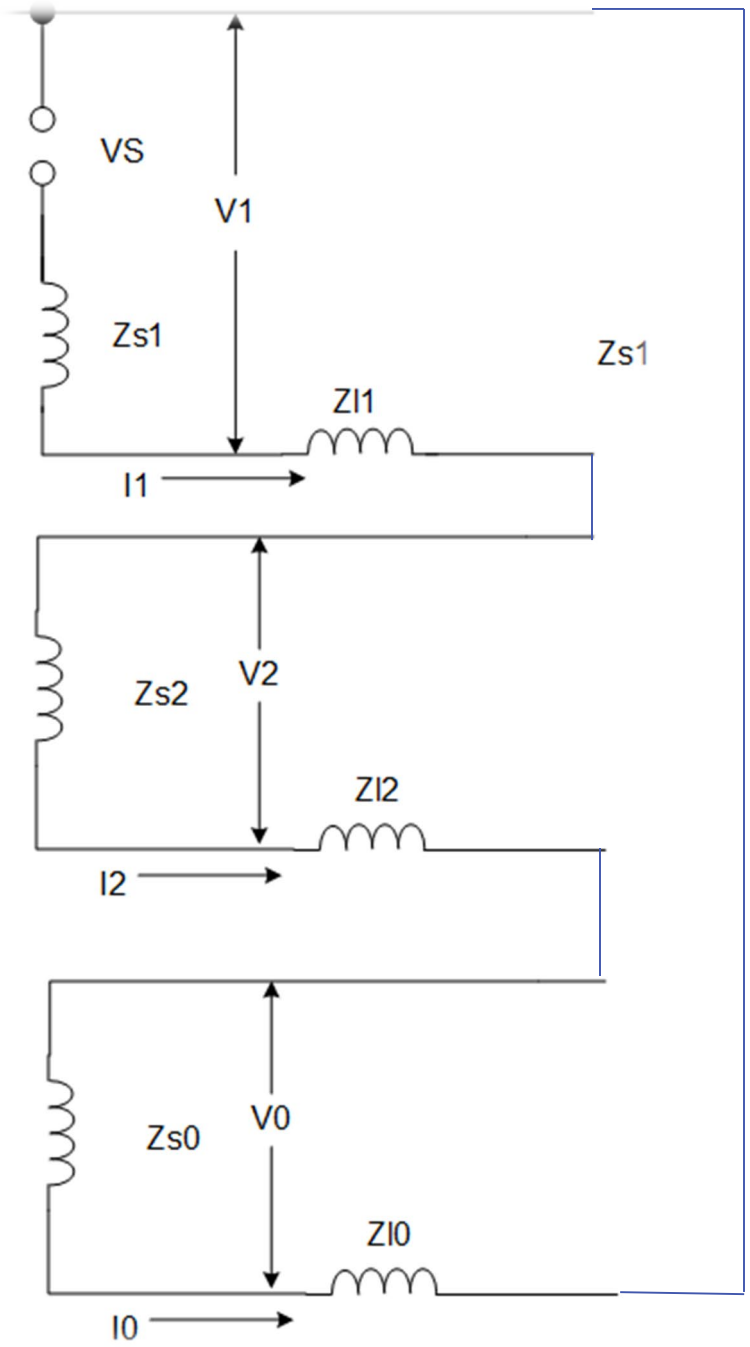

Phase to phase fault

- Assuming a Phase to Phase fault, what do we know about the fault current?
  - Faulted phases are very large
  - Un-faulted phase is small, almost zero.

How do we connect the sequence networks for a particular fault?

- $Ic = 0$
- $Ia = -Ib = x$
- $Ia+Ib+Ic = I0 = 0$
- $Ia+a*Ib+a^2*IC = sqrt(3)x = I1$
- $Ia + a^2Ib+aIc = sqrt(3)x = I2$
- $I1=I2$ and $I0$ is not involved

How do we connect so that I1=I2 and I0=0

- The positive and negative sequence networks have to be in series for a phase to phase fault.

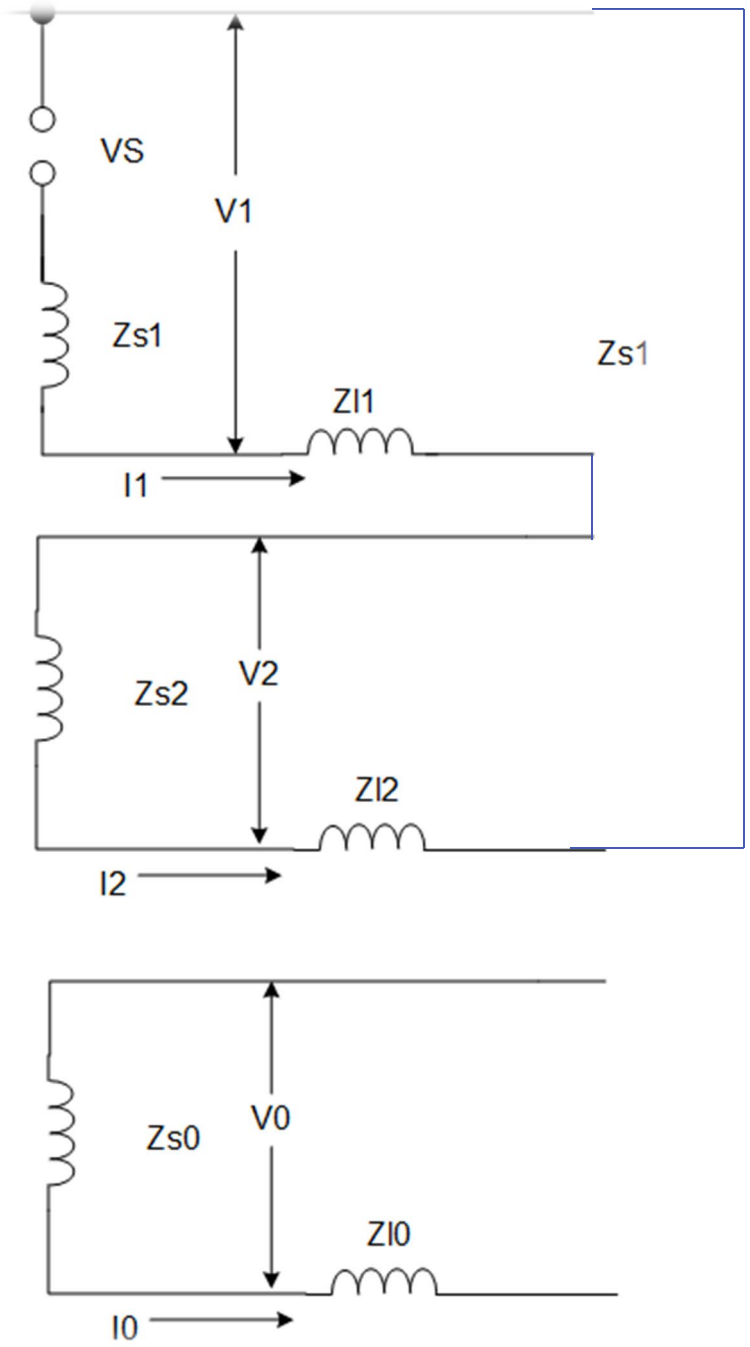

Three Phase Fault

- Assuming a three phase, what do we know about the fault current?
  - All three phase are large and equal

How do we connect the sequence networks for a particular fault?

- $Ia = Ib = Ic = x$
- $1/3(Ia+Ib+Ic)=0=I0$
- $1/3(Ia+aIb+a^2Ic)=x=I1$
- $1/3(Ia+a^2Ib+aIc)=0=I2$
- I0=I2 are not involved

How do we connect so that I2=I0=0

- The negative and zero sequence networks are not involved.

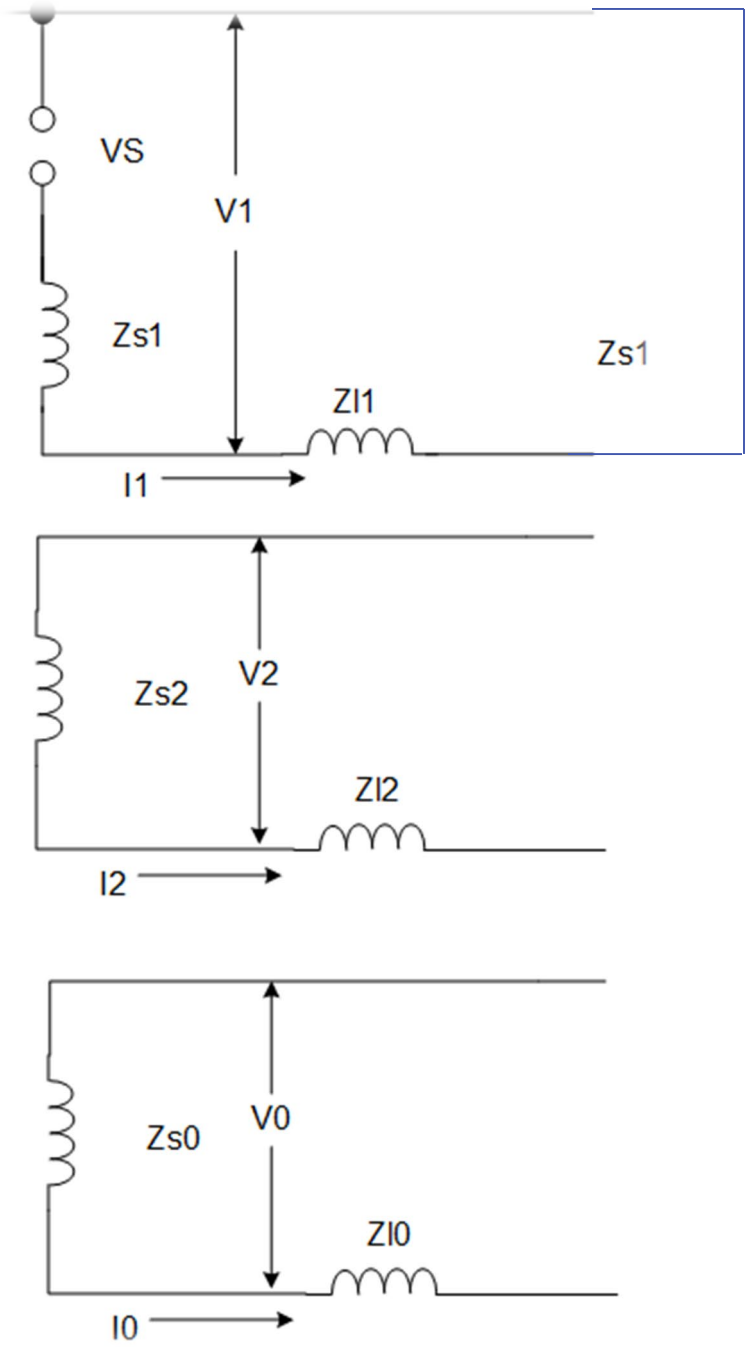

Line-to-line-to-ground fault

Line-to-line-to-ground fault

Assuming a B-phase to C-phase to ground, the conditions at the point of the fault are:

$$I_A = 0$$
$$V_B = 0$$
$$V_C = 0$$

Therefore, $V_{a1} = V_{a2} = V_{a0} = V_A/3$. Substituting into the voltage equations and simplifying, results in:

$$I_{a1} = \frac{E_{a1}(Z_2 + Z_0)}{Z_1 Z_2 + Z_1 Z_0 + Z_2 Z_0}$$

Therefore, all three sequence networks are connected. Since $V_{a1} = V_{a2} = V_{a0}$, the networks are connected in parallel.

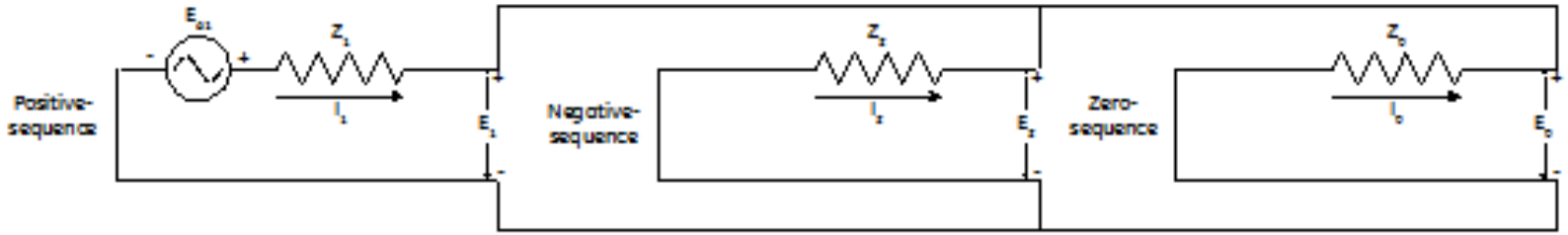

Common Fault Types:

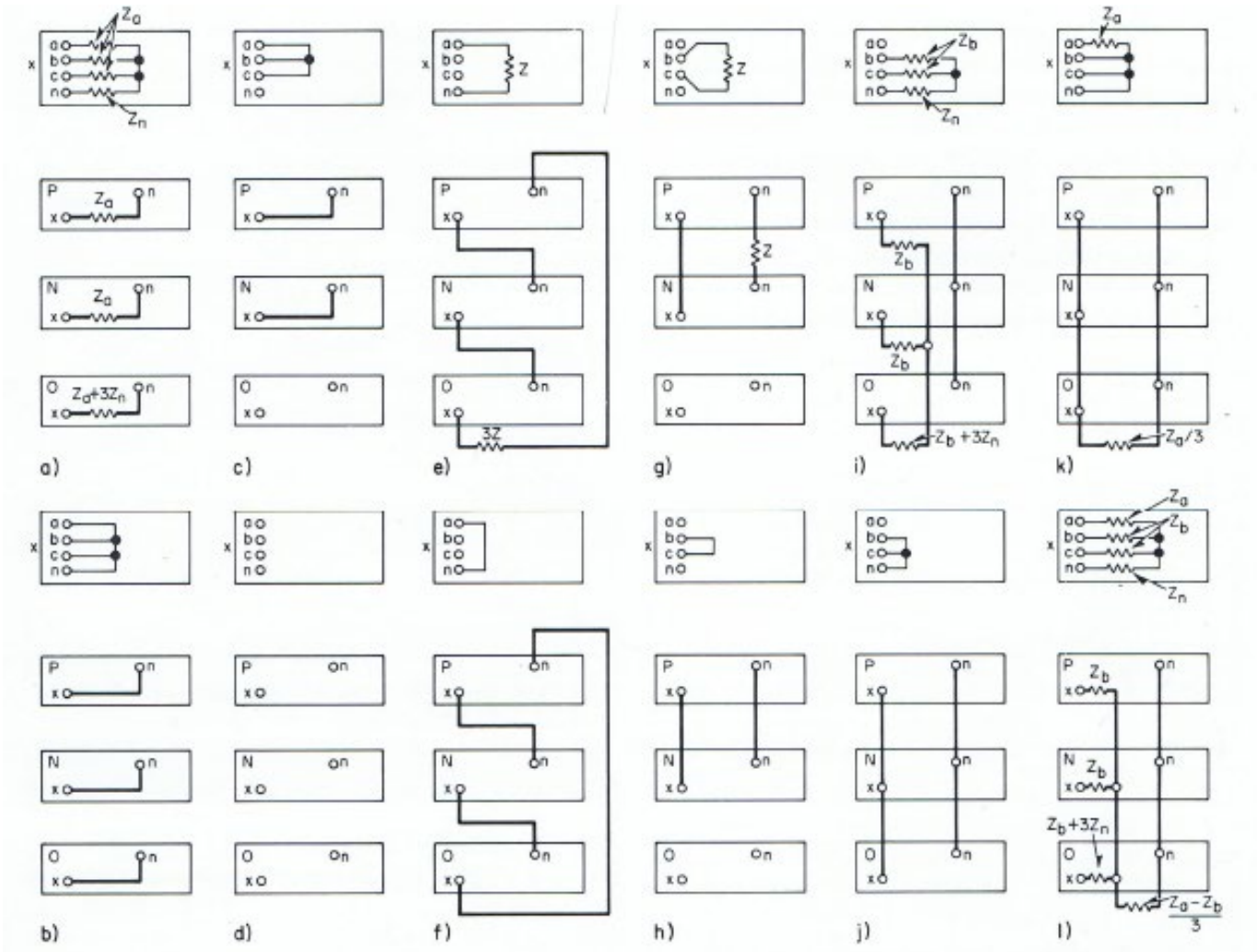

Note:

a) Balanced load or three-line-to-ground fault with impedances.
b) A three-line-to-ground fault.
c) A three-phase fault.
d) A shunt circuit open.
e) A line-to-ground fault through an impedance.
f) A line-to-ground fault.
g) A line-to-line fault through impedance.
h) A line-to-line fault.
i) A two-line-to-ground fault with impedance.
j) A two-line-to-ground fault.
k) A three-line-to-ground fault with impedance in phase a.
l) Unbalanced load or three-line-to-ground fault with impedance.

Transformer Interconnections:

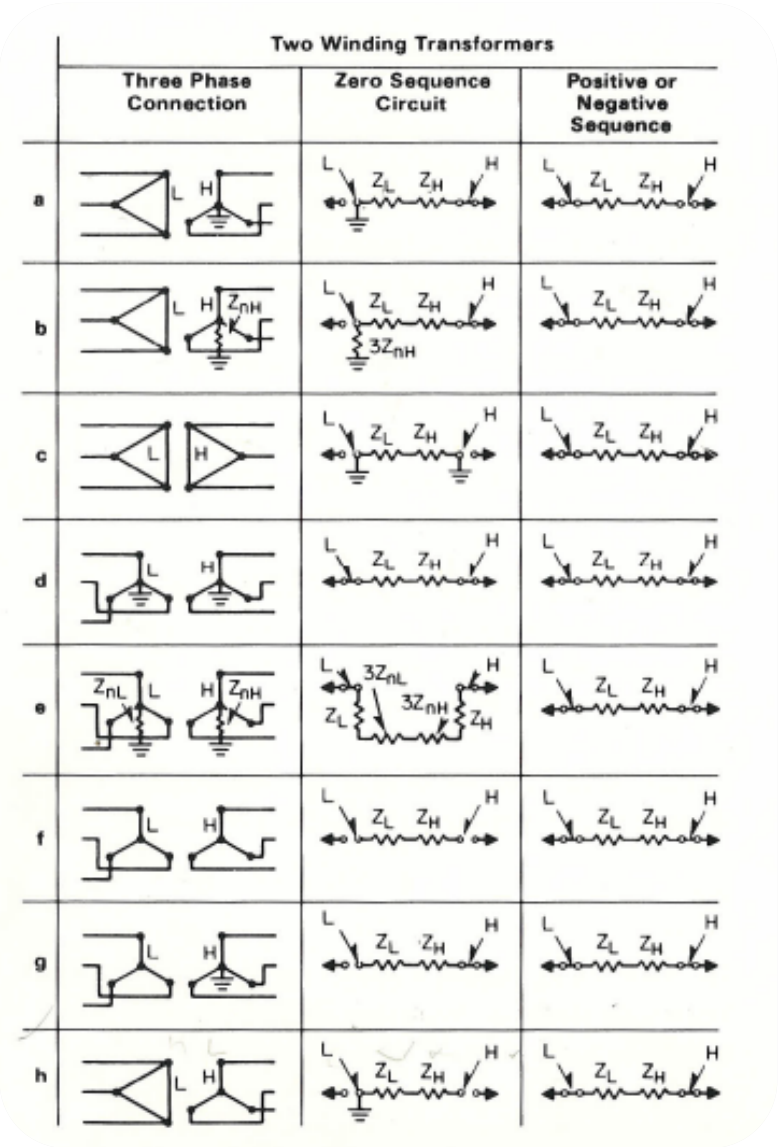

Transformer Interconnections:

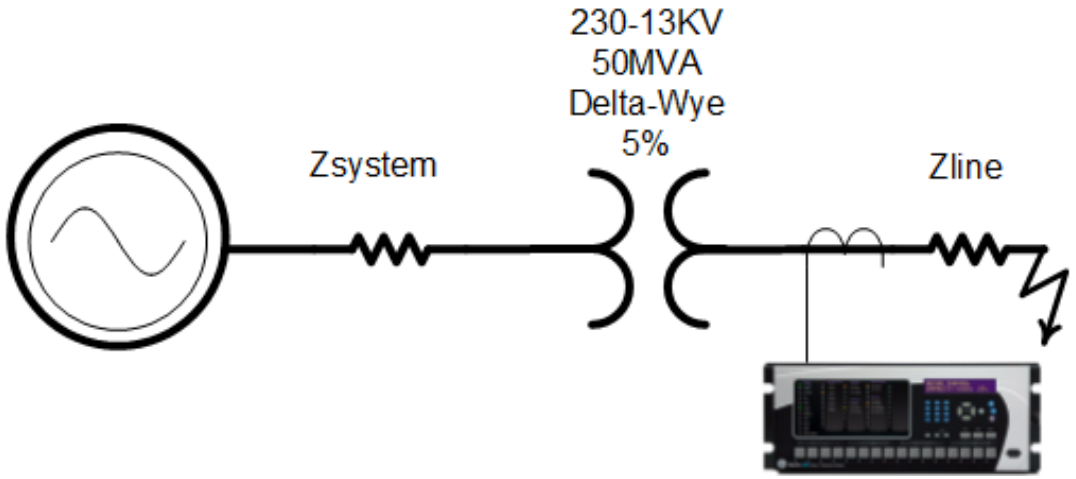

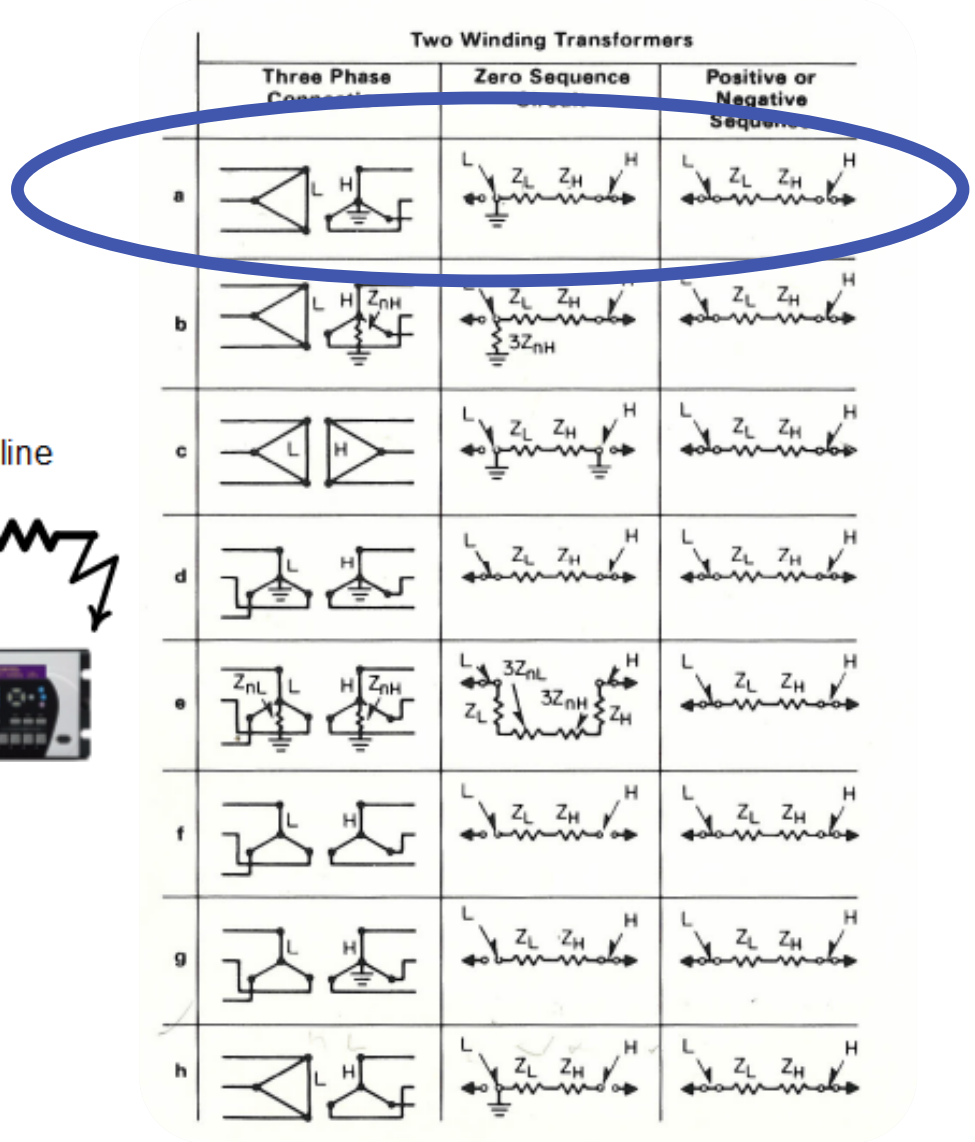

Networks with Transformers

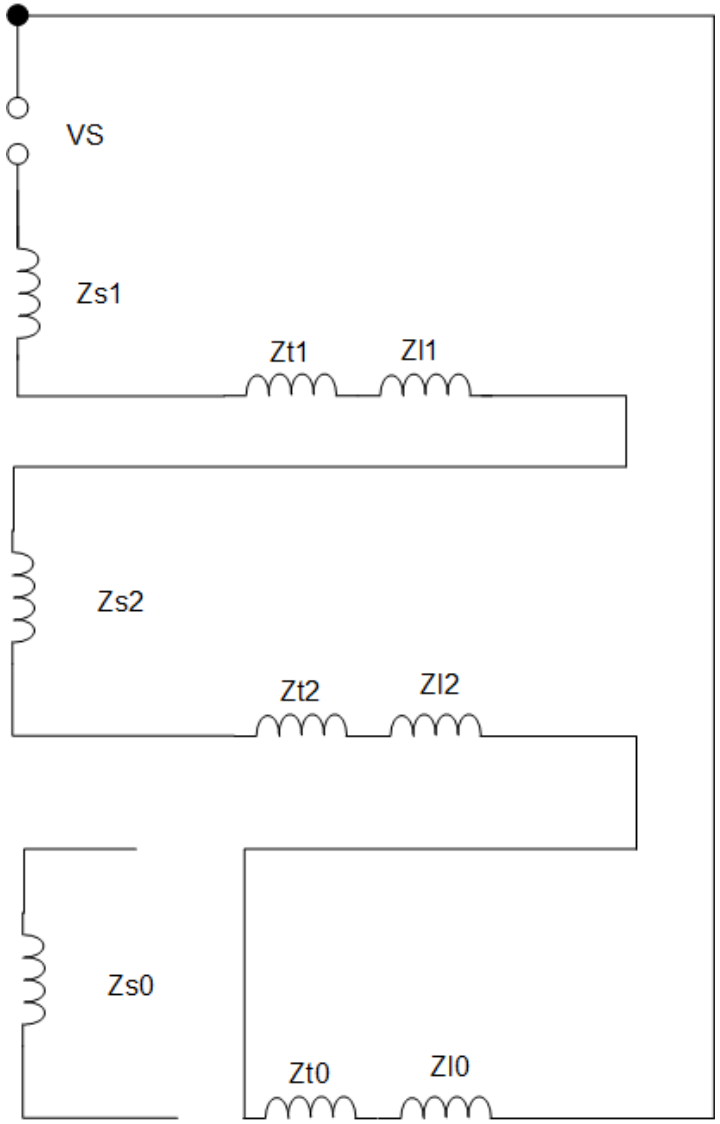

What are my sequence impedances

- In transmission and distribution lines: Z1=Z2. Z0 is always different from Z1 because it is a loop impedance (conductor + earth and or ground.) For transmission lines, X1 is typically 2 to 6 times X0.
- In transformers: Z0 = Z1=Z2 or Z0= infinity depending on the connection.

Calculate Phase to Ground Fault current on secondary of transformer, assuming an infinite bus

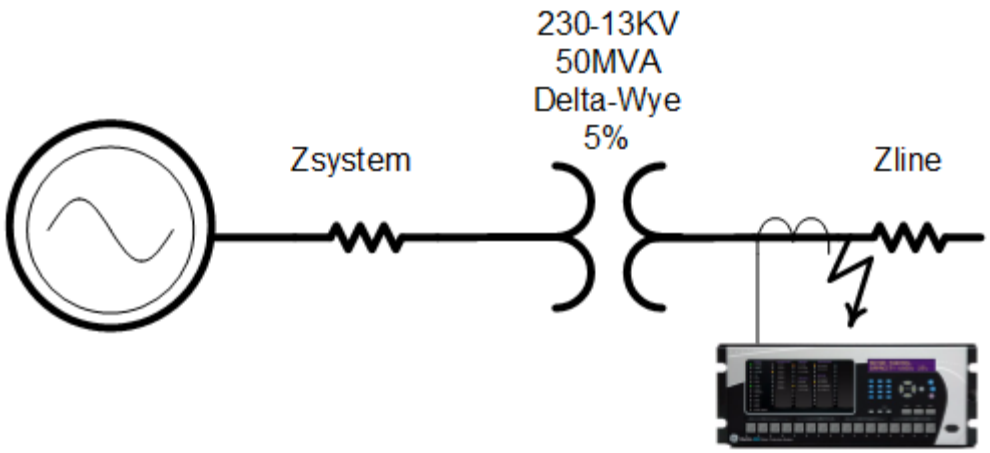

First, build the sequence network

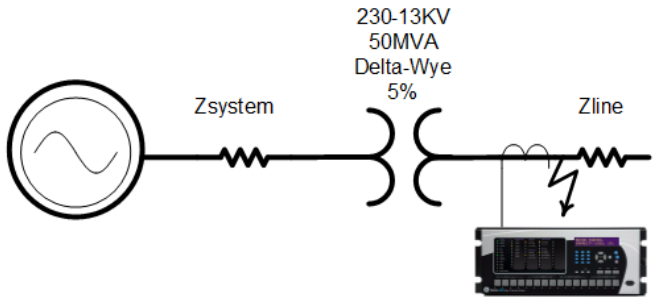

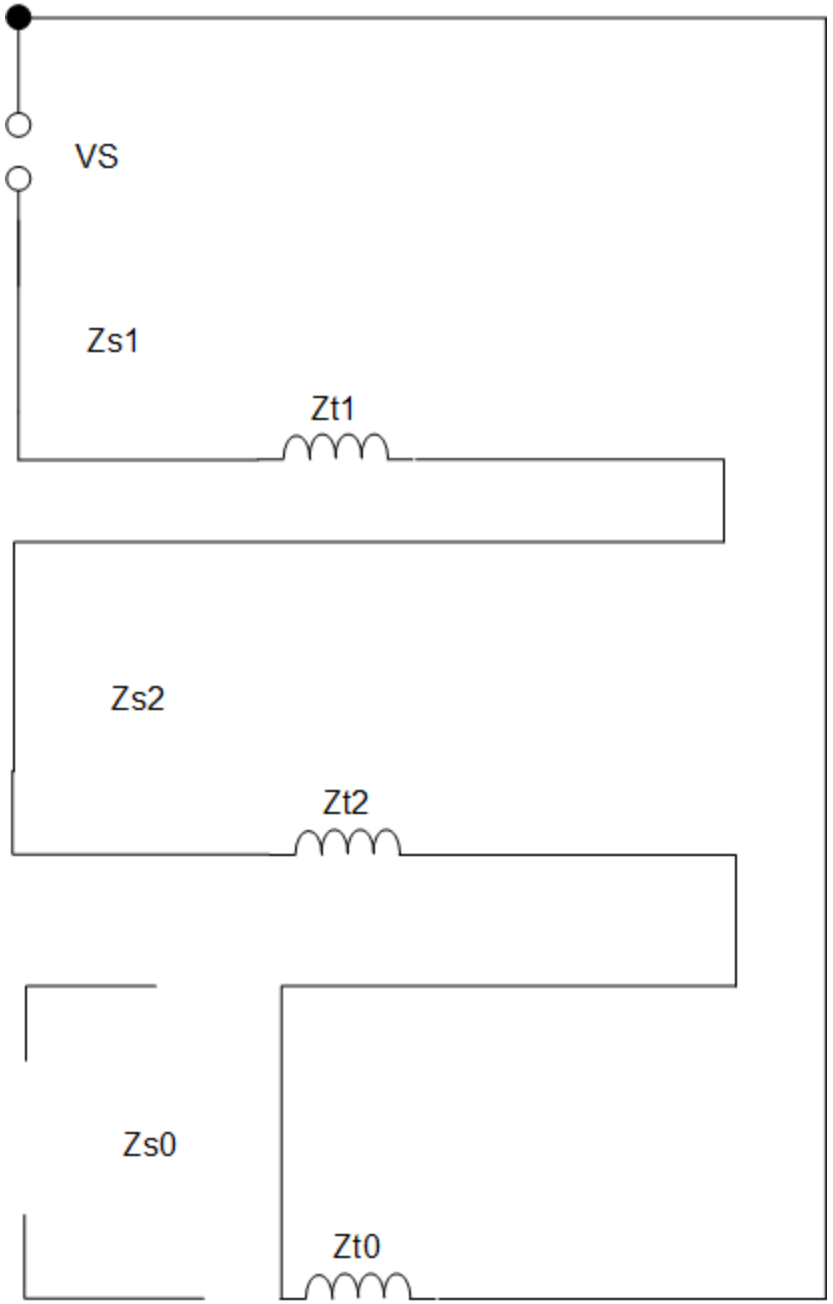

- Zt1=5% on 50MVA base
- Zt2=5% on 50MVA base
- Zt3=5% on 50MVA base
- I=V/Z=1pu/(0.05pu+0.05pu+0.05pu)
- I=6.667pu
- Ibase=50MVA/(sqrt(3)*13KV)=2221A
- I1=I2=I0=Ipu*Ibase=14.8KA
- Ia=I1+I2+I0=44KA

What would be the fault current with two transformers in parallel?

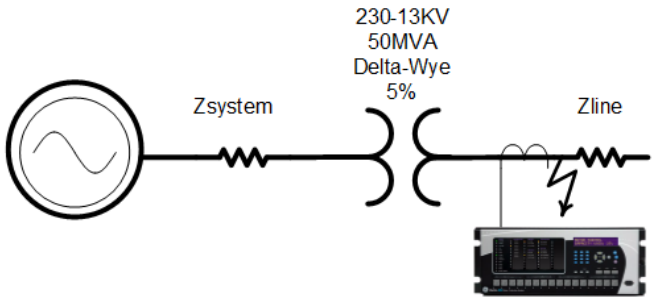

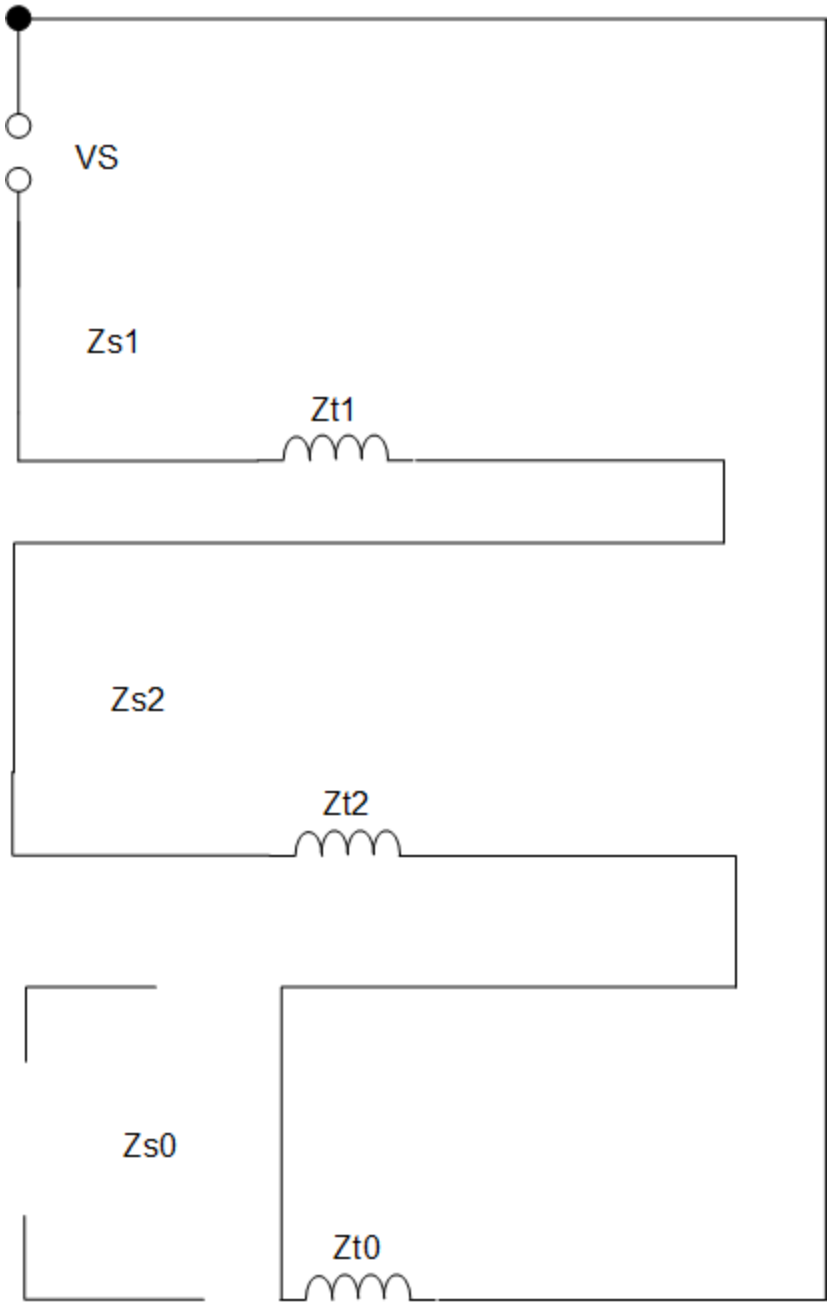

- Zt1=2.5% on 50MVA base
- Zt2=2.5% on 50MVA base
- Zt3=2.5% on 50MVA base
- I=V/Z=1pu/(0.025pu+0.025pu+0.025pu)
- I=13.3pu
- Ibase=50MVA/(sqrt(3)*13KV)=2221A
- I1=I2+I3=Ipu*Ibase=30KA
- Ia=90KA

Calculate Three Phase Fault current on secondary of transformer, assuming an infinite bus

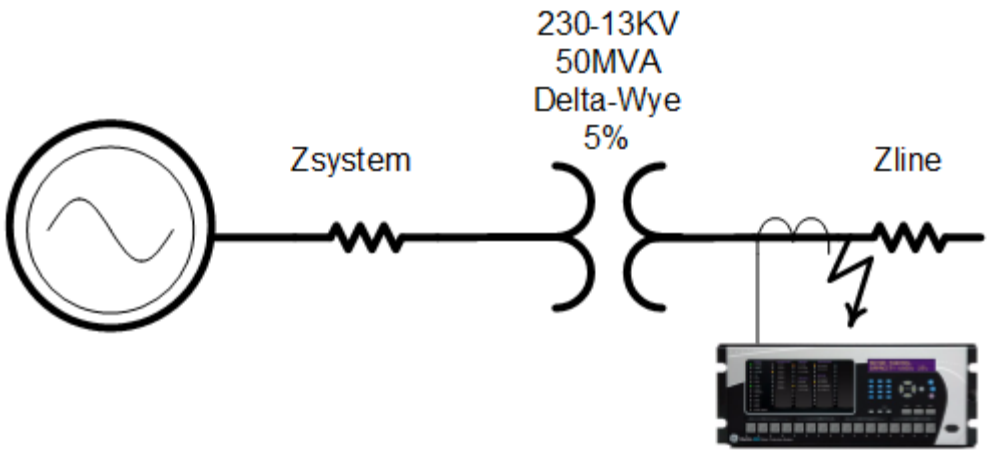

First, build the sequence network

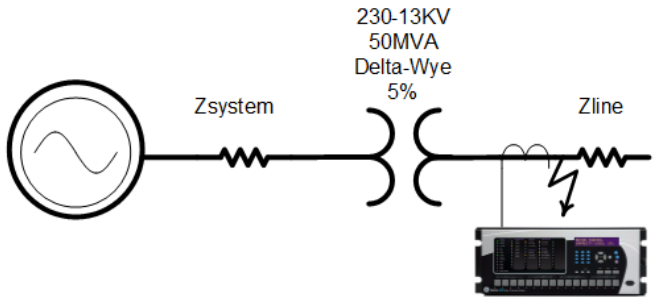

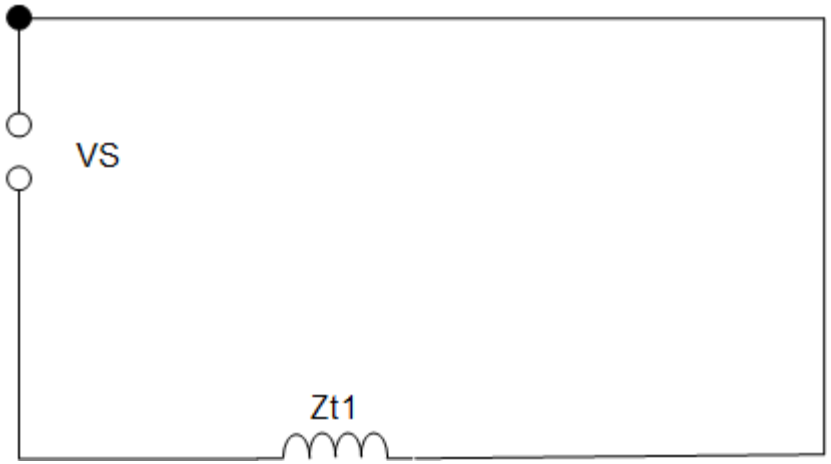

- Zt1=5% on 50MVA base
- I=V/Z=1pu/0.05pu
- I=20pu
- Ibase=50MVA/(sqrt(3)*13KV)=2221A
- I1=Ipu*Ibase=44KA
- Ia=I1+I2+I0=44KA

Phase to ground current is larger than phase to phase current at the transformer secondary terminals.

Calculate Phase to Ground Fault current on secondary of transformer, given a utility available fault current of 215000MVA and Z0=3.5*Z1 for system

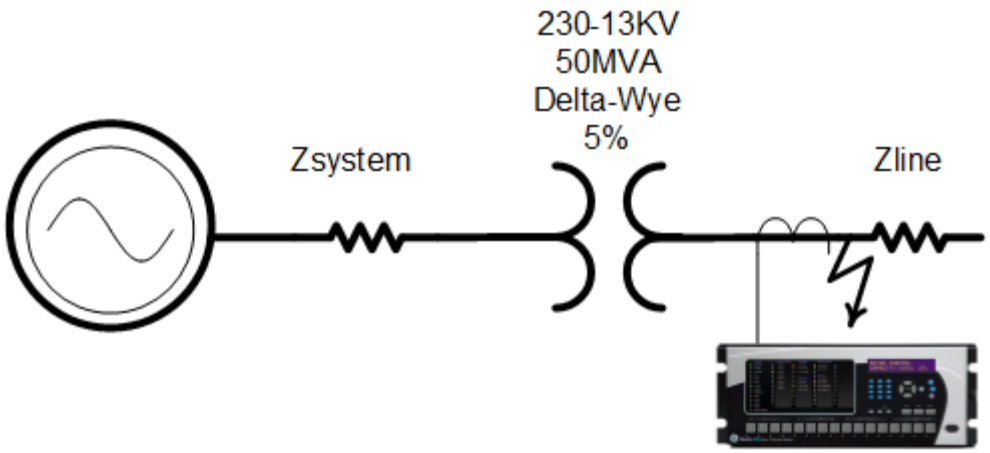

First, build the sequence network

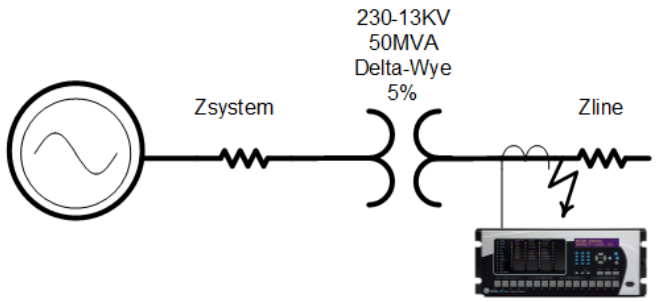

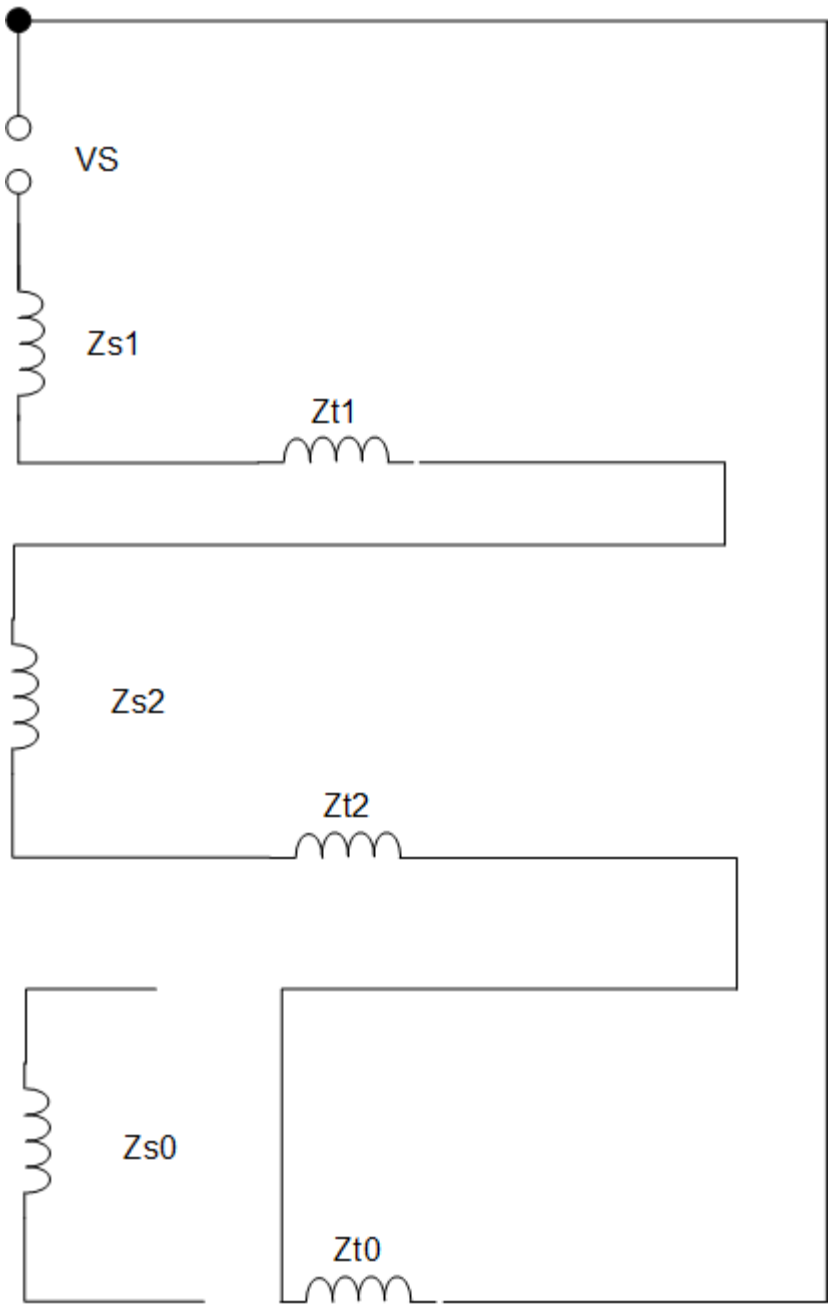

- Zt1=Zt2=Zt0=5% on 50MVA base
- Zs1=1pu on 215000MVA base
- Zs1=1*(230/13)^2*50/215000=.0728pu@13&50
- I=V/Z=1pu/(0.05pu+0.05pu+0.05pu+0.0728+0.0728+)
- I=3.38pu
- Ibase=50MVA/(sqrt(3)*13KV)=2221A
- I=Ipu*Ibase=7.51KA
- Ia=I1+I2+I3=22KA

What does this look like in the real world

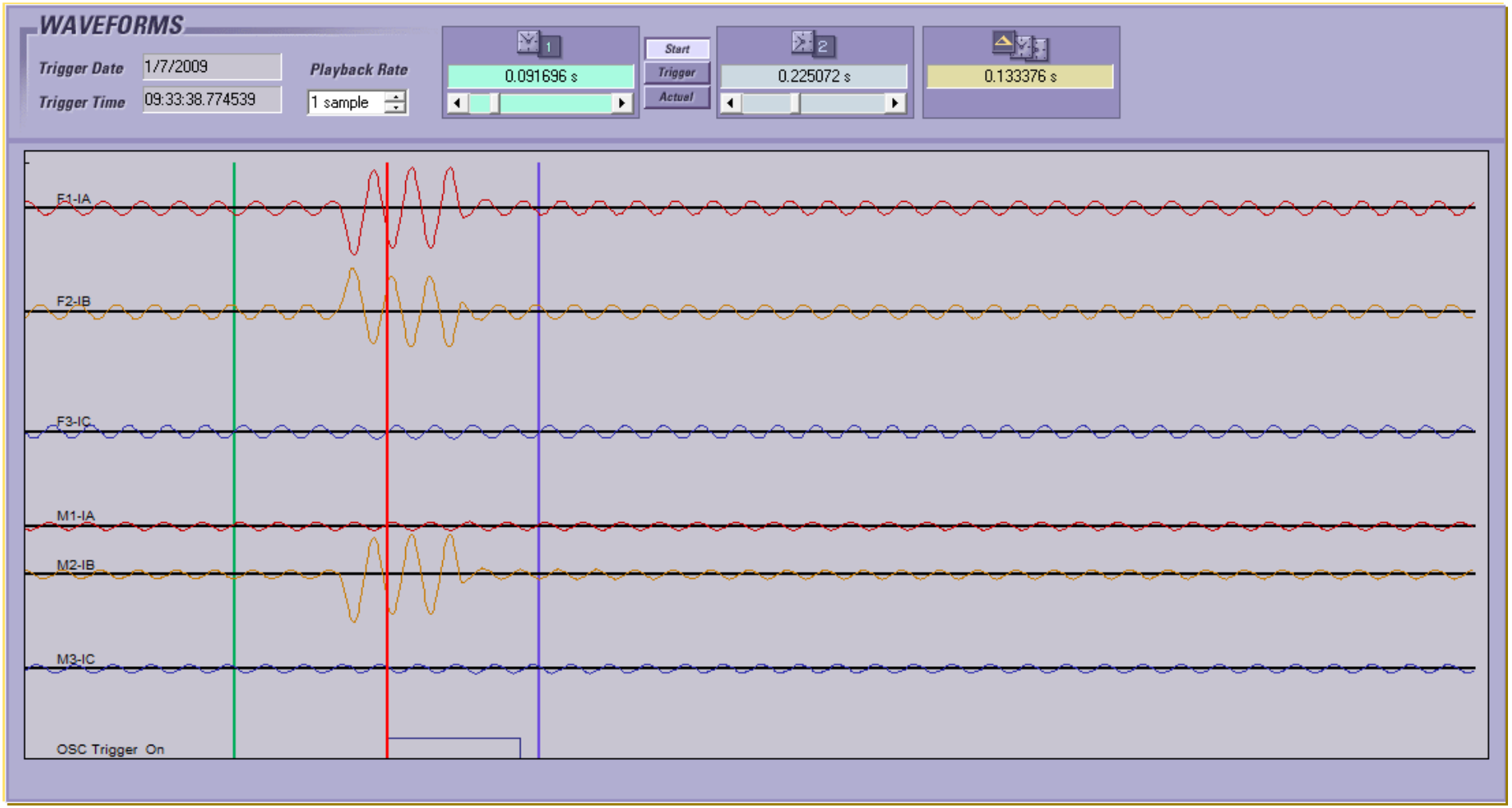
WAVEFORMS
Trigger Date
1/7/2009
Trigger Time
09:33:38.774539
Playback Rate
1 sample
0.091696 s
Start
Trigger
Actual
0.225072 s
0.133376 s
F1-IA
F2-IB
F3-IC
M1-IA
M2-IB
M3-IC
OSC Trigger On

Delta-Wye

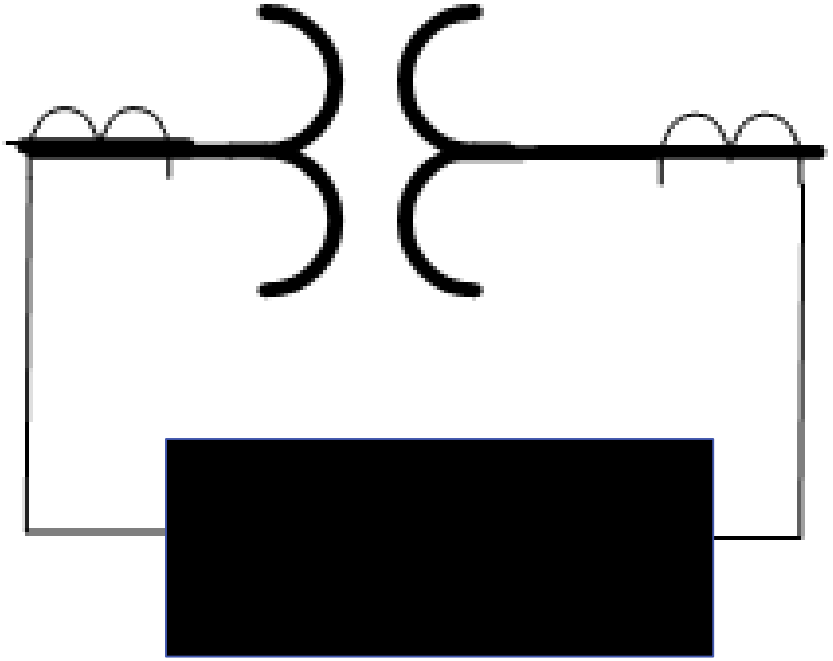

Pre-Fault Values

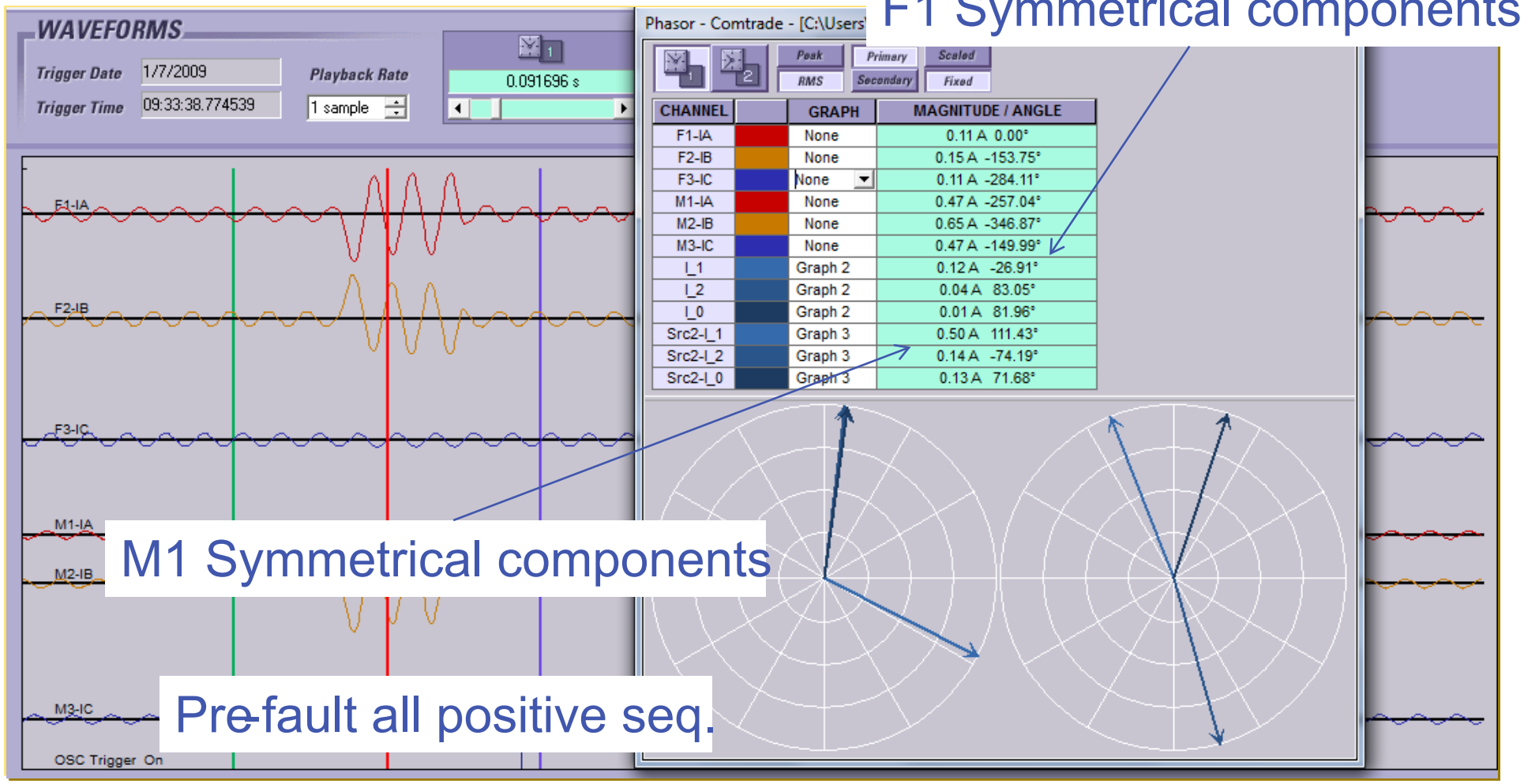

Fault Values

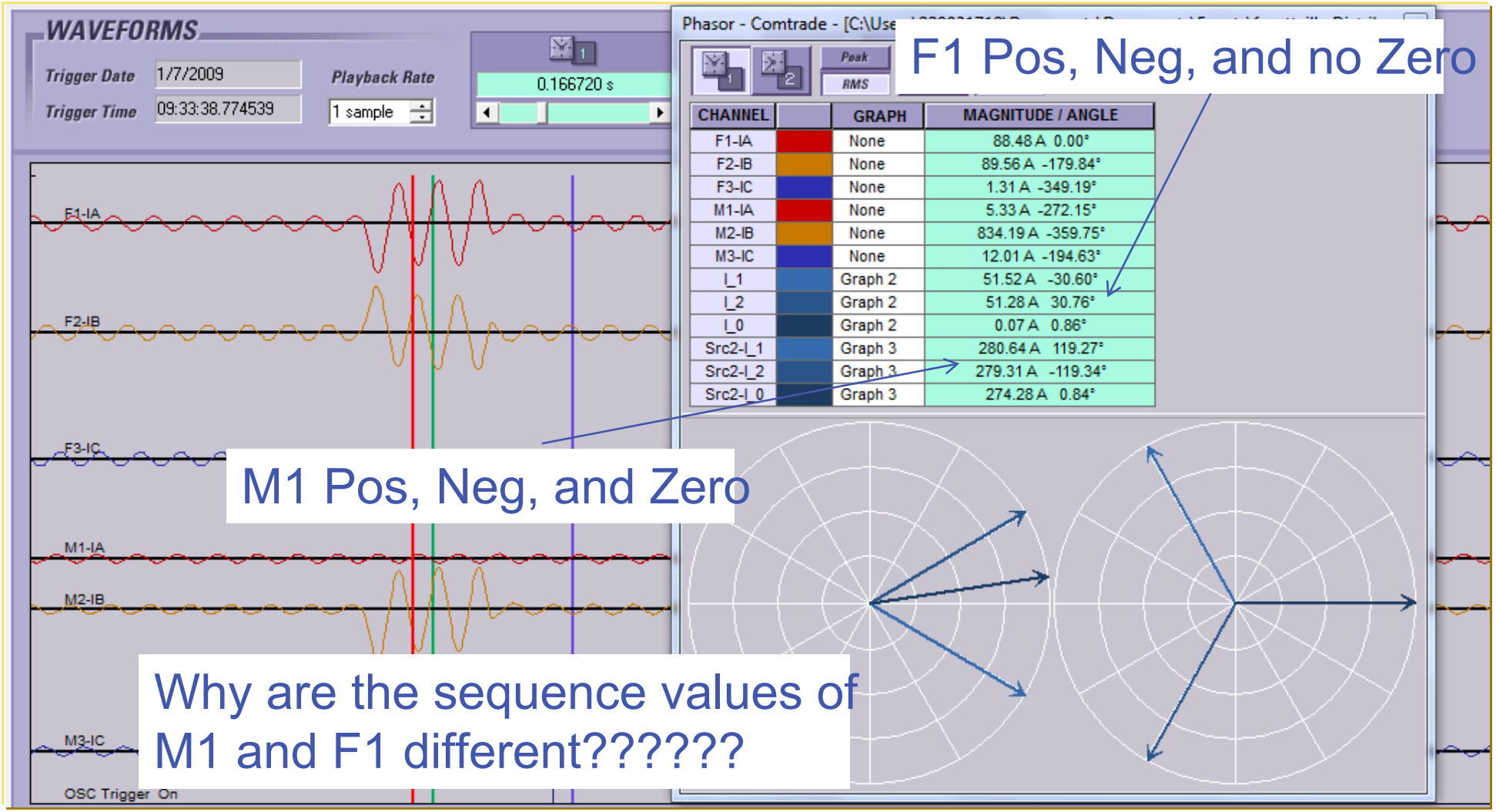

The Fault Network as Seen From F1

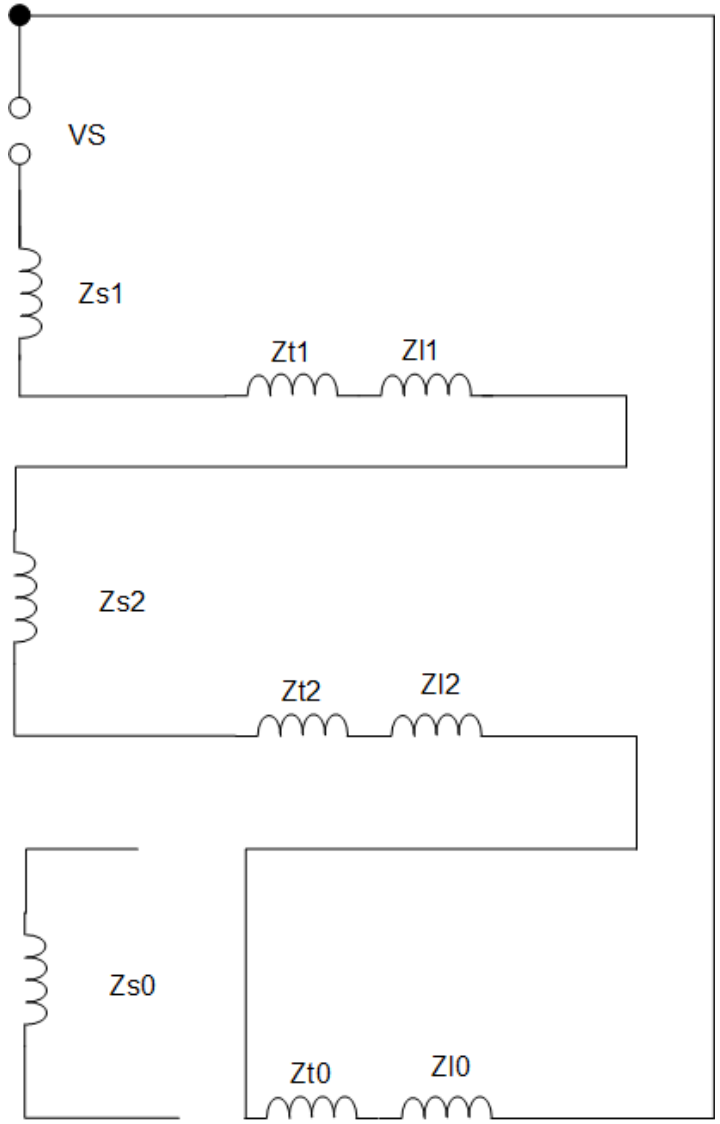

Src2-I_1		Graph 3	280.64 A 119.27°
Src2-I_2		Graph 3	279.31 A -119.34°
Src2-I_0		Graph 3	274.28 A 0.84°

The Fault Network as Seen From M1

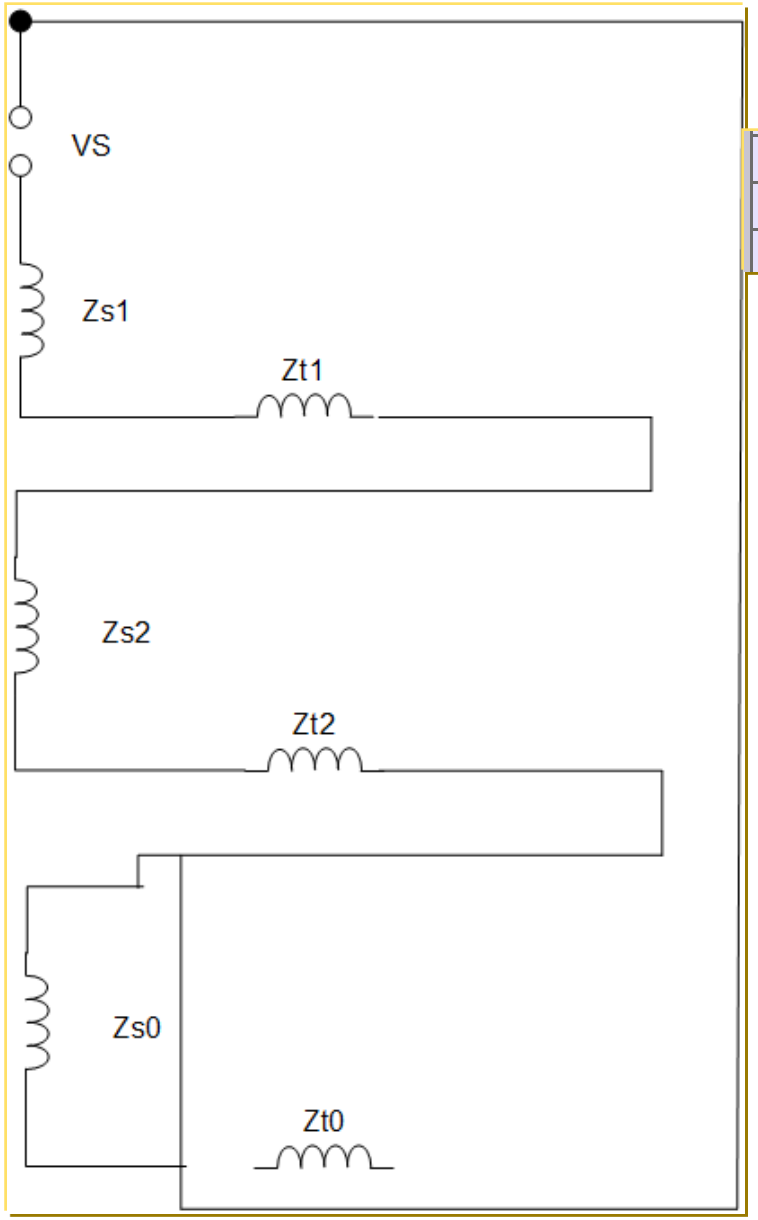

I_1		Graph 2	51.52 A -30.60°
I_2		Graph 2	51.28 A 30.76°
I_0		Graph 2	0.07 A 0.86°

What Effect Does this Fault Have on Voltage?

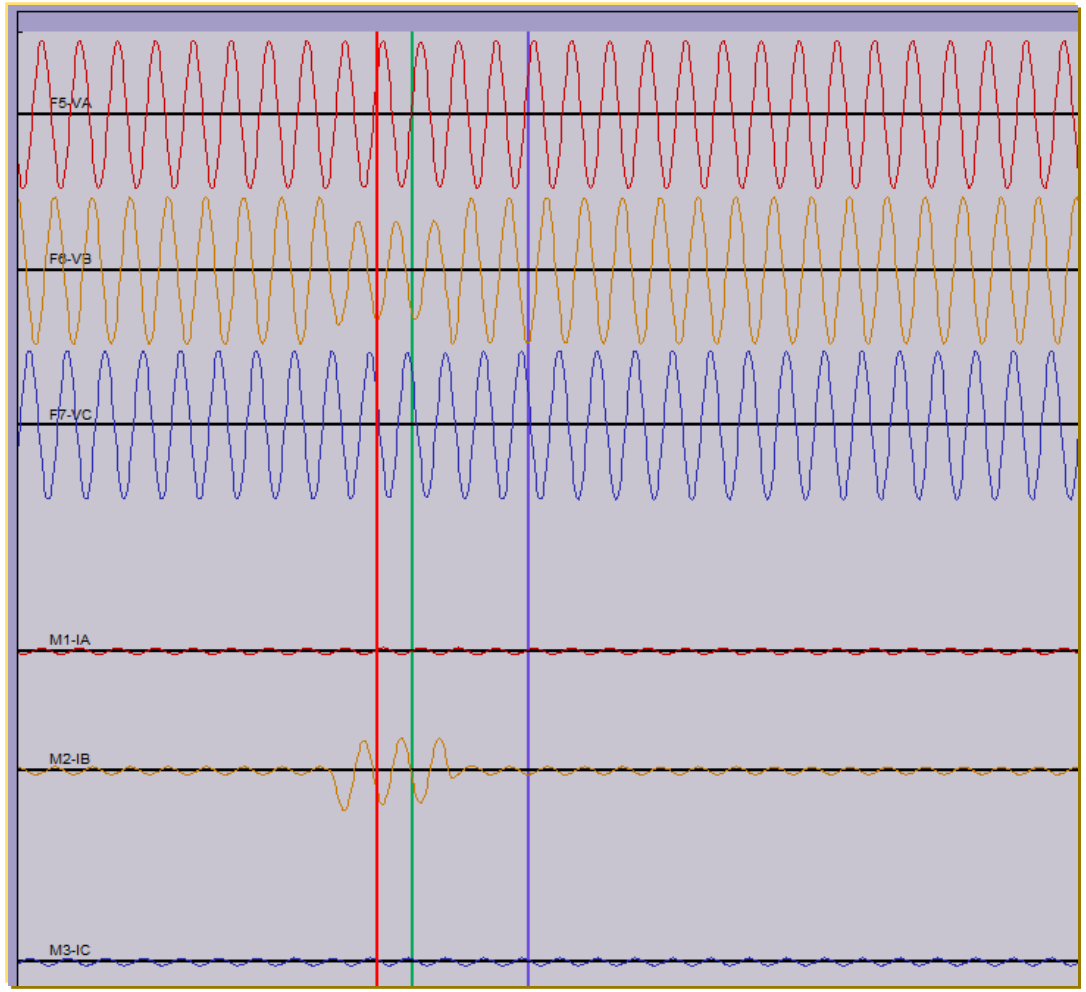

What Effect Does this Fault Have on Voltage?

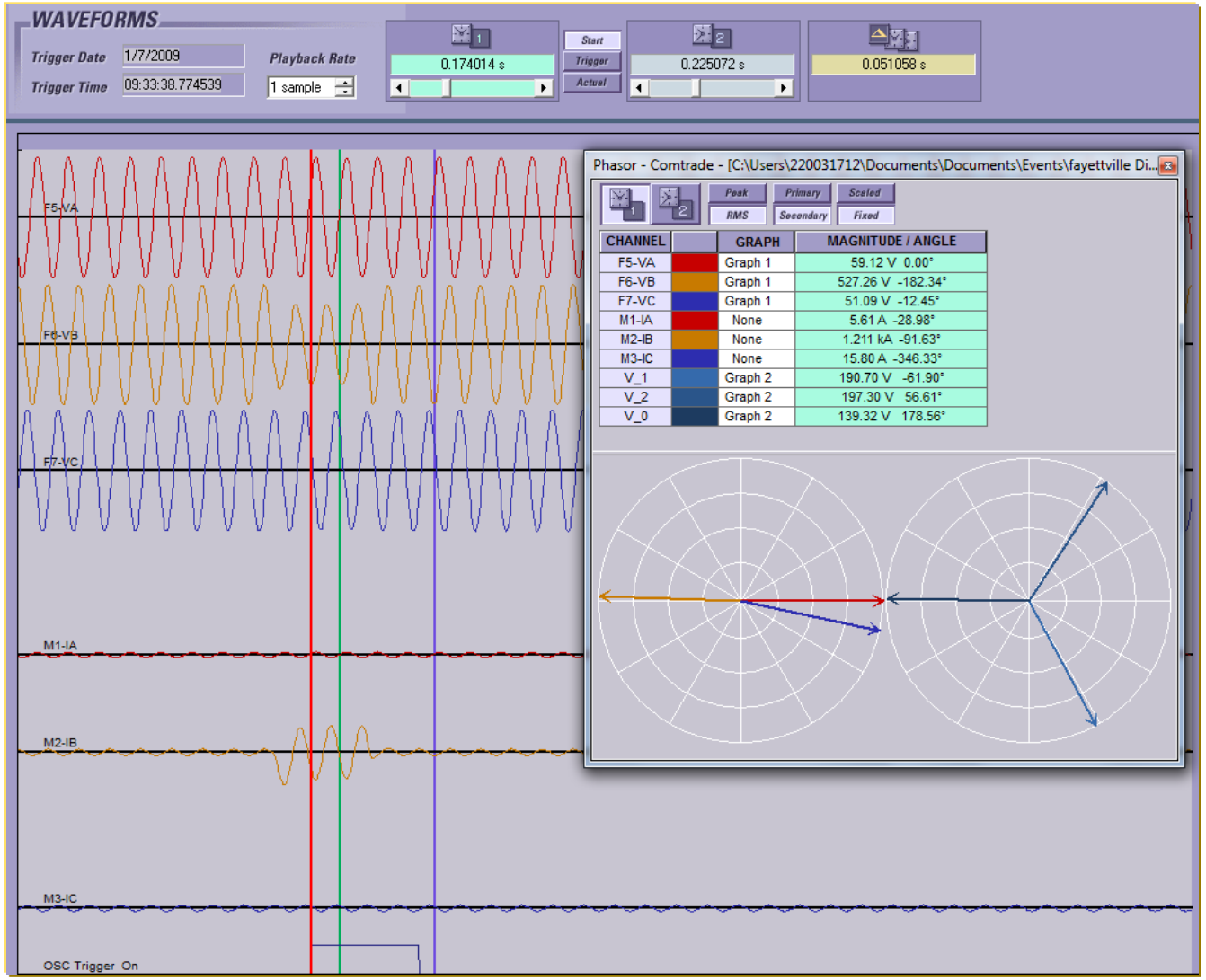

Identification of Fault Types Quiz

Problem #1

Positive and Negative Sequence Current are equal, Zero Sequence is a different values, Positive, Negative and Zero sequence Voltage Equal.

Problem #2

Positive and Negative Sequence Current are equal, No Zero Sequence current

The V0 and V2 conundrum

POTT Scheme

POTT– Permissive Overreaching Transfer Trip

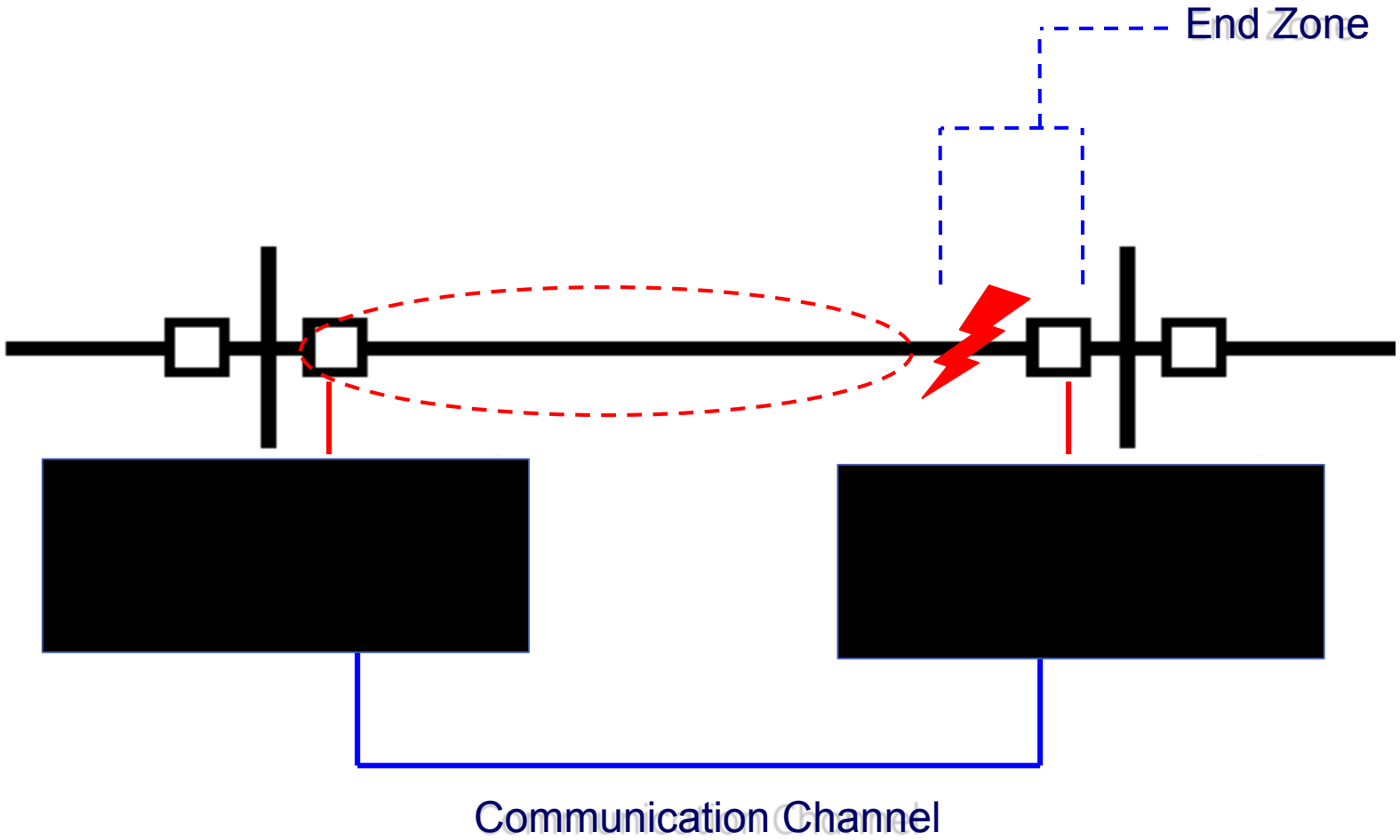

POTT Scheme

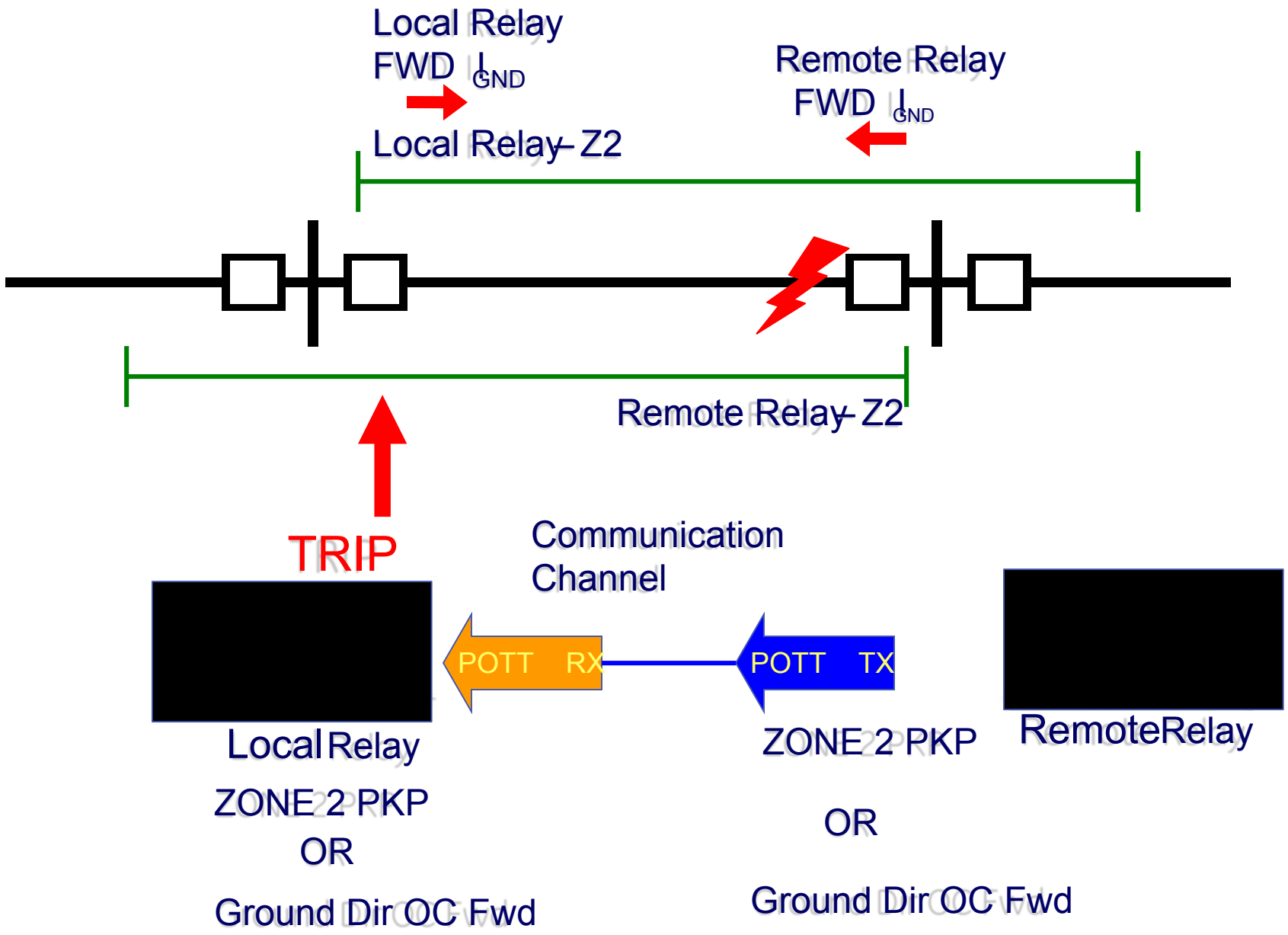
Local Relay
FWD I_{GND}
Remote Relay
FWD I_{GND}
Local Relay – Z2
Remote Relay – Z2
TRIP
Communication
Channel
POTT RX
POTT TX
Local Relay
ZONE 2 PKP
OR
Ground Dir OC Fwd
ZONE 2 PKP
OR
Ground Dir OC Fwd
RemoteRelay

Polarizing Quantities

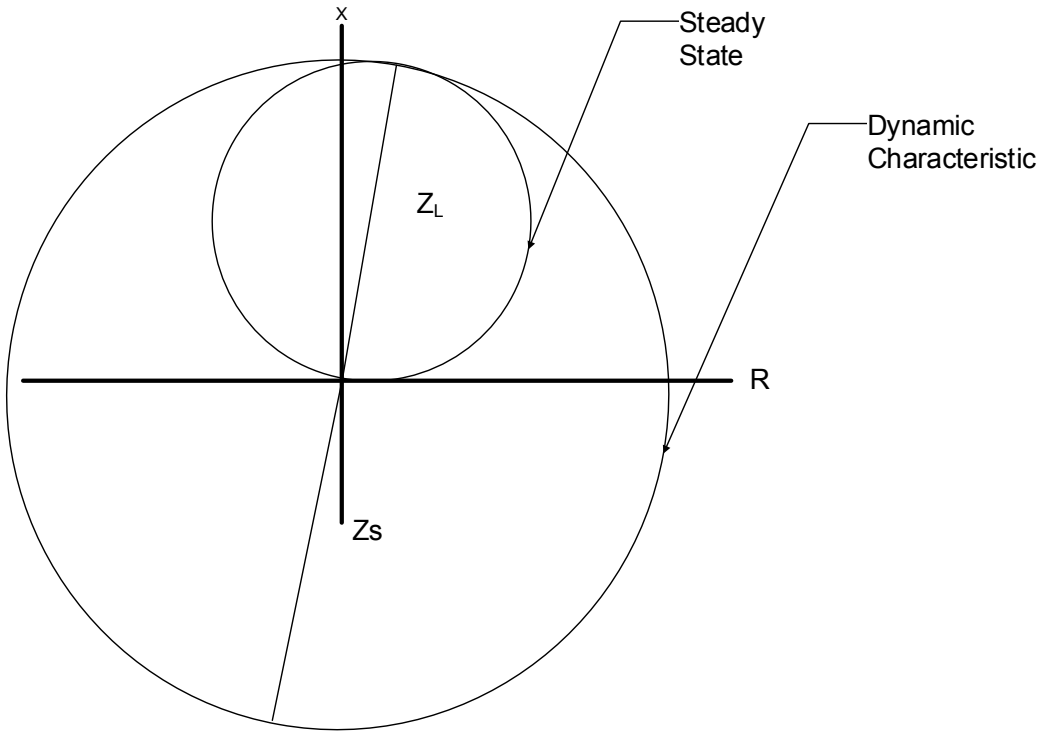

Arc Impedance

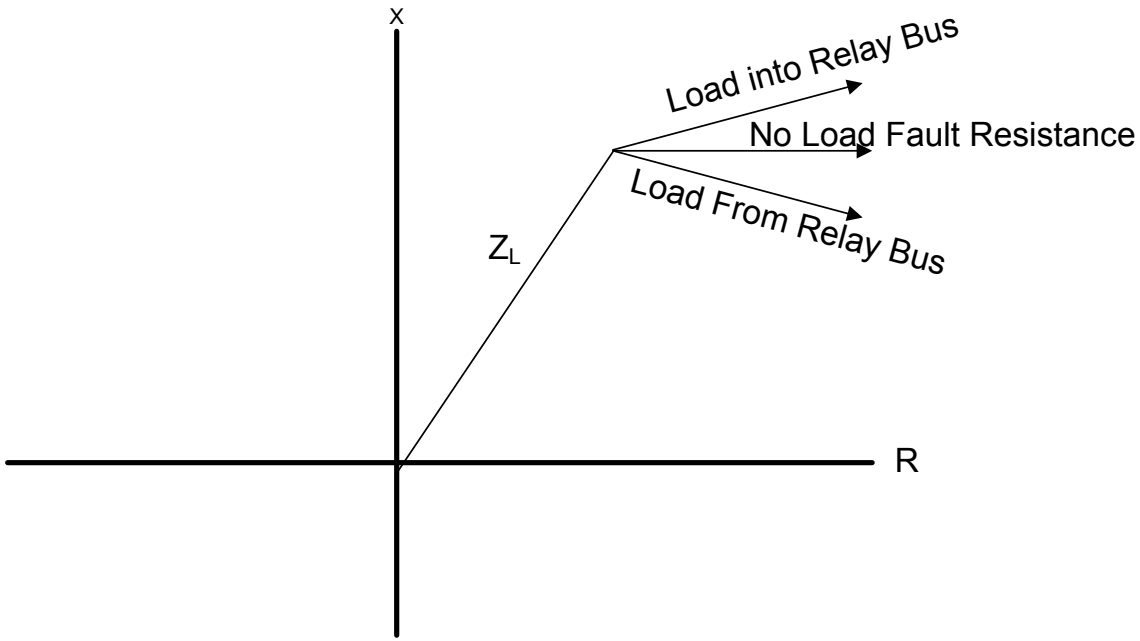

Solve the Arc Impedance Problem with Directional Overcurrent

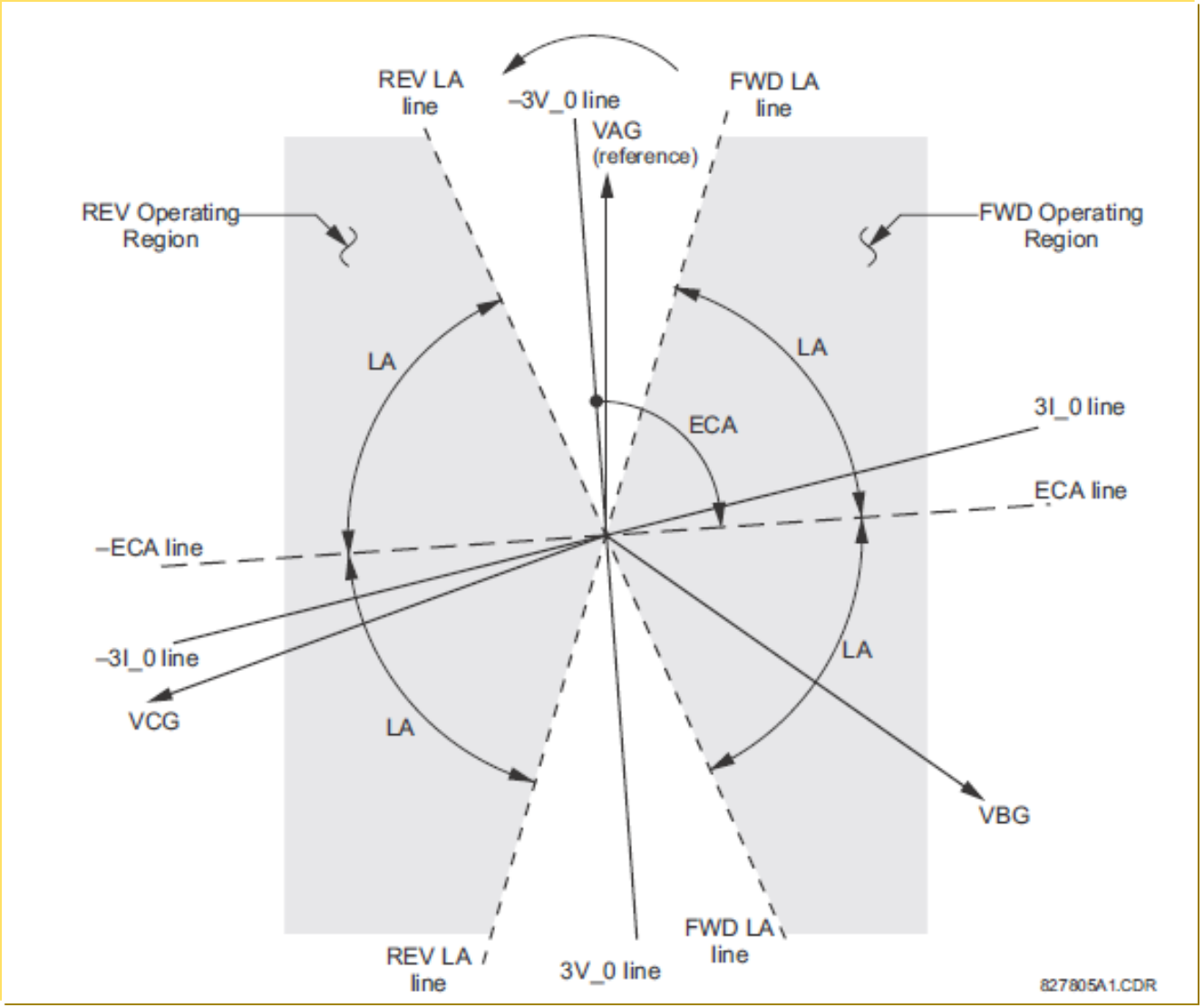

Sequence V Generated by a fault

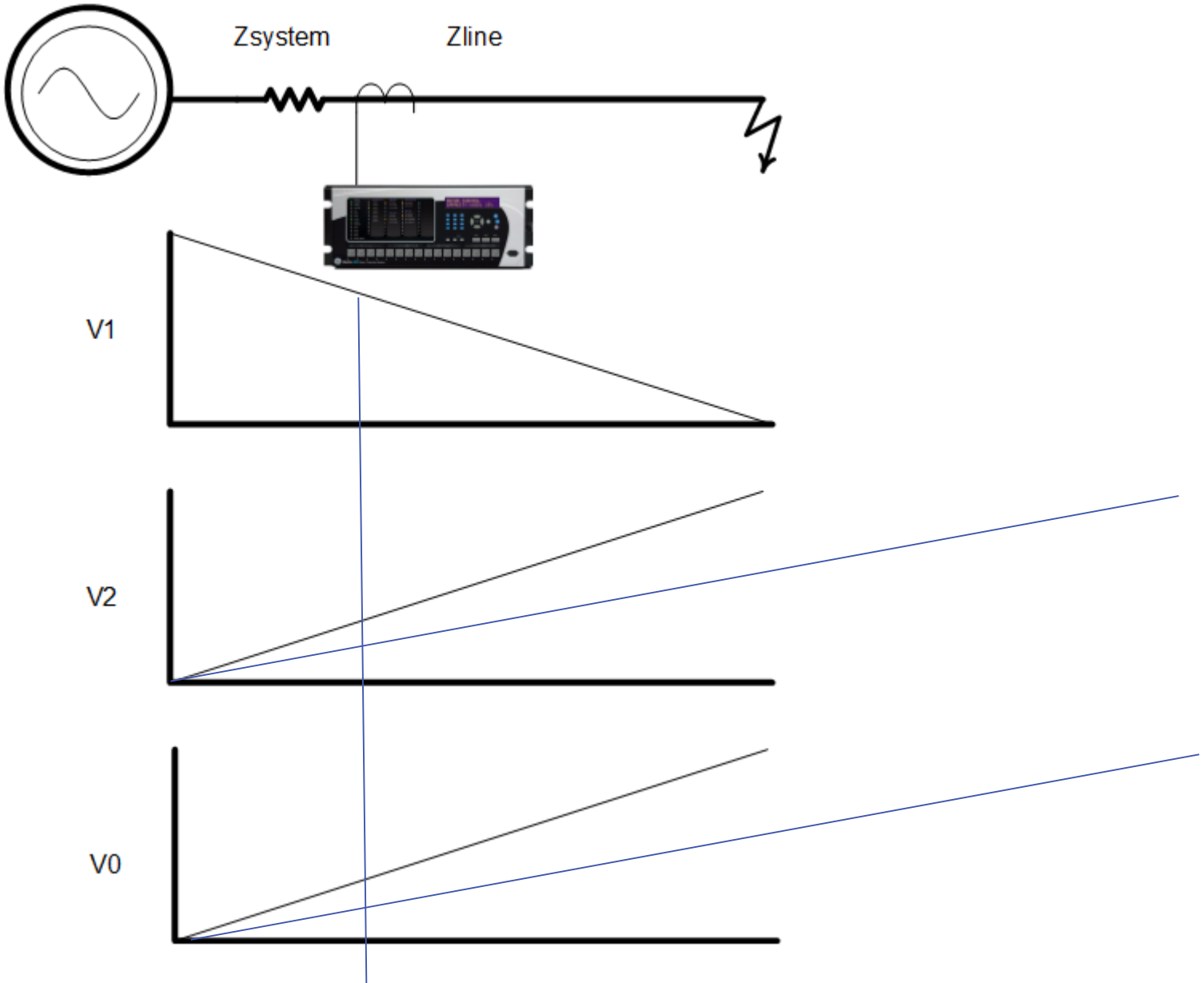

Faults Generate V0 and V1

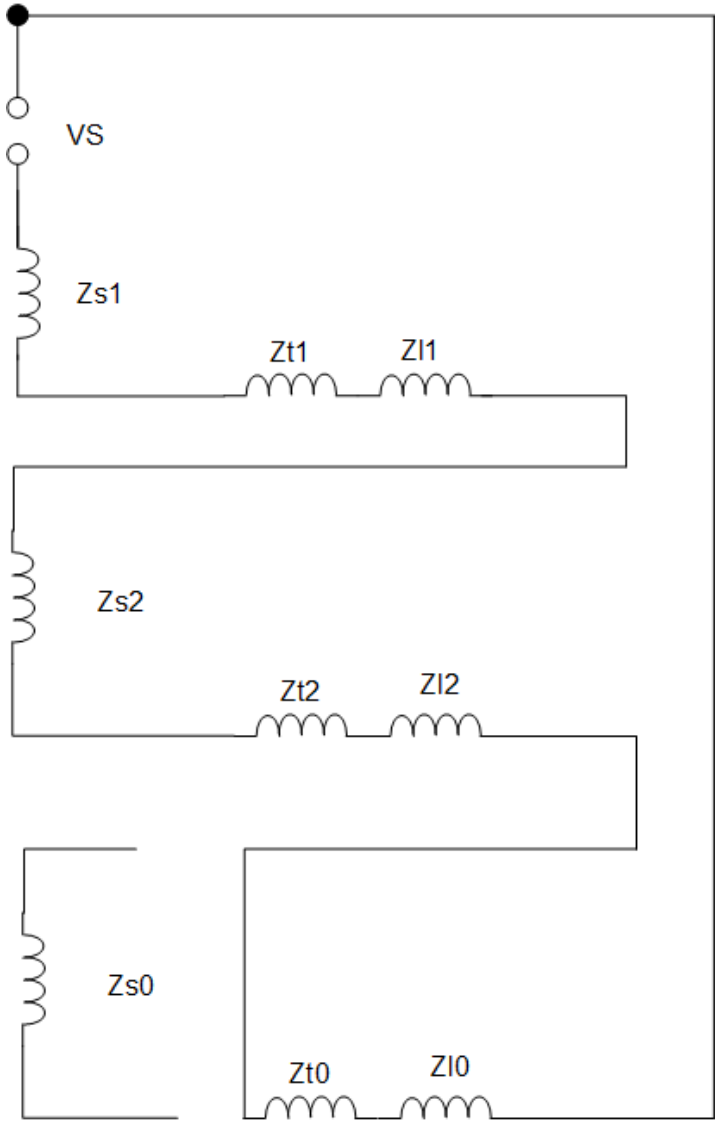

Solution

In a weak in feed, not enough current for polarization
For remote faults not enough V0 for polarization.
Solution: use dual polarization.