Review of Capacitor Bank Control Practices

Ilia Voloh – GE Grid Solutions

Thomas Ernst

2019 Texas A&M Protective Relaying Conference

Agenda

- Introduction
- Overview of standards and regulations
- Methods to control voltage/VARs
- Transients control
- Interlocking
- Optimizing multiple banks control and coordination with other Volt/VAR controls
- Conclusions

Introduction

Shunt capacitor bank controller offer many options to switch the capacitor bank on or off, ensuring security and safety:

- Automatic control based on VARs, current, voltage or power factor
- Automatic control based on time-of-the-day, month and season
- Manual control, local at the bank location or remote by the system operator
- Optimizing operation to minimize number of the switch operations
- Interlocking to allow capacitors discharge to a safe level
- Ability to control and coordinate multiple banks by one controller

Overview of Standards and Regulations

The capacitor banks support the system voltage and reduce reactive power flow through the power system with following benefits:

- Voltage support
- VARs support
- Increased system capacity
- Reduced system power losses
- Reduced billing charges

Overview of Standards and Regulations

- IEEE Std. 1036-2010 - IEEE Guide for the Application of Shunt Power Capacitors defines Capacitor Controller as:

  The device required to automatically operate the switching device(s) to energize and de-energize shunt power capacitor banks

- The IEEE considers capacitor control to operate automatically and are coordinated with generator voltage and power factor controls

- NERC reliability standard VAR-001-5 "Voltage and Reactive Control" requires transmission owners to:

  Develop a transmission voltage schedule and to "schedule sufficient reactive resources to regulate voltage levels under normal and Contingency conditions

Methods to Control Voltage/VARs

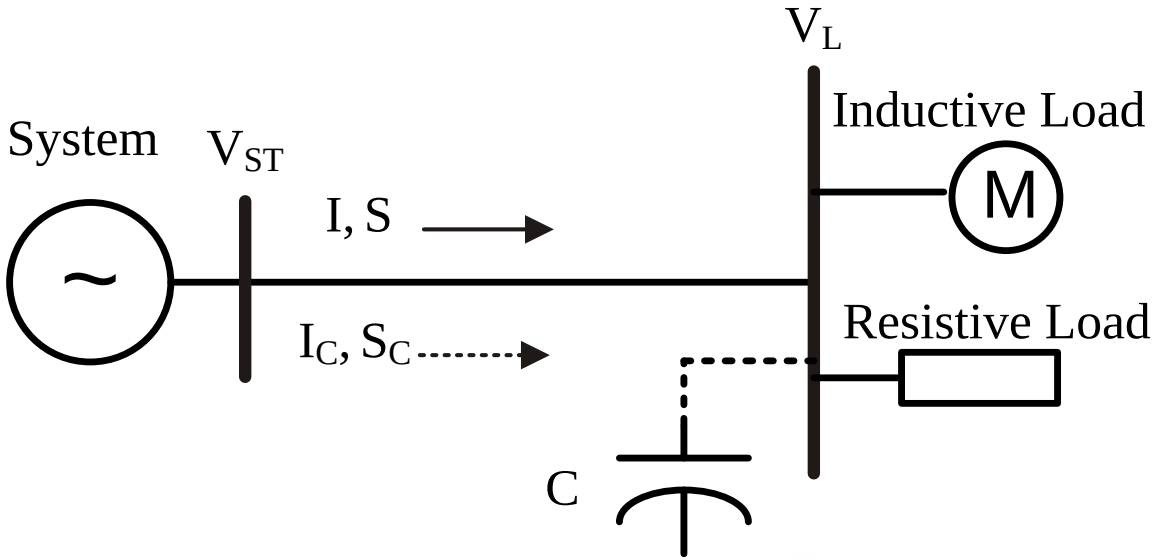

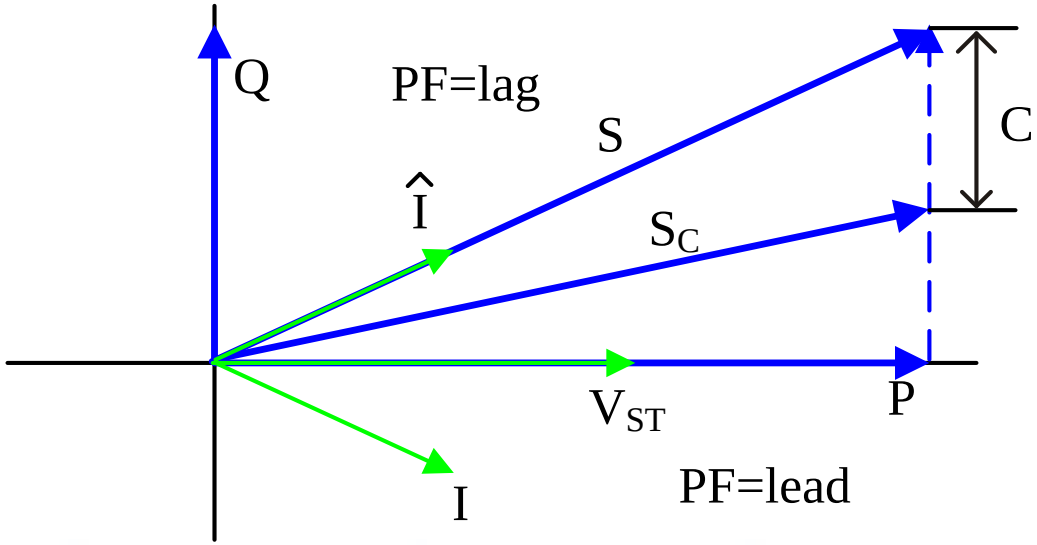

- It reduces reactive power required from the system by bank capacitance C
- It reduces reactive power plus apparent power flow through the line
- Inherently, current through the line will decrease from I to I_C and
- Voltage at the bus V_L will increase because losses were decreased
- Power factor is improved with the capacitor bank switched on

Methods to Control Voltage/VARs

A. Time-based automatic control

- Beneficial when the VAR demand pattern is well known during each day and during certain seasons
- Minimizes the number of switching operations of the capacitor banks and reduce switching transients

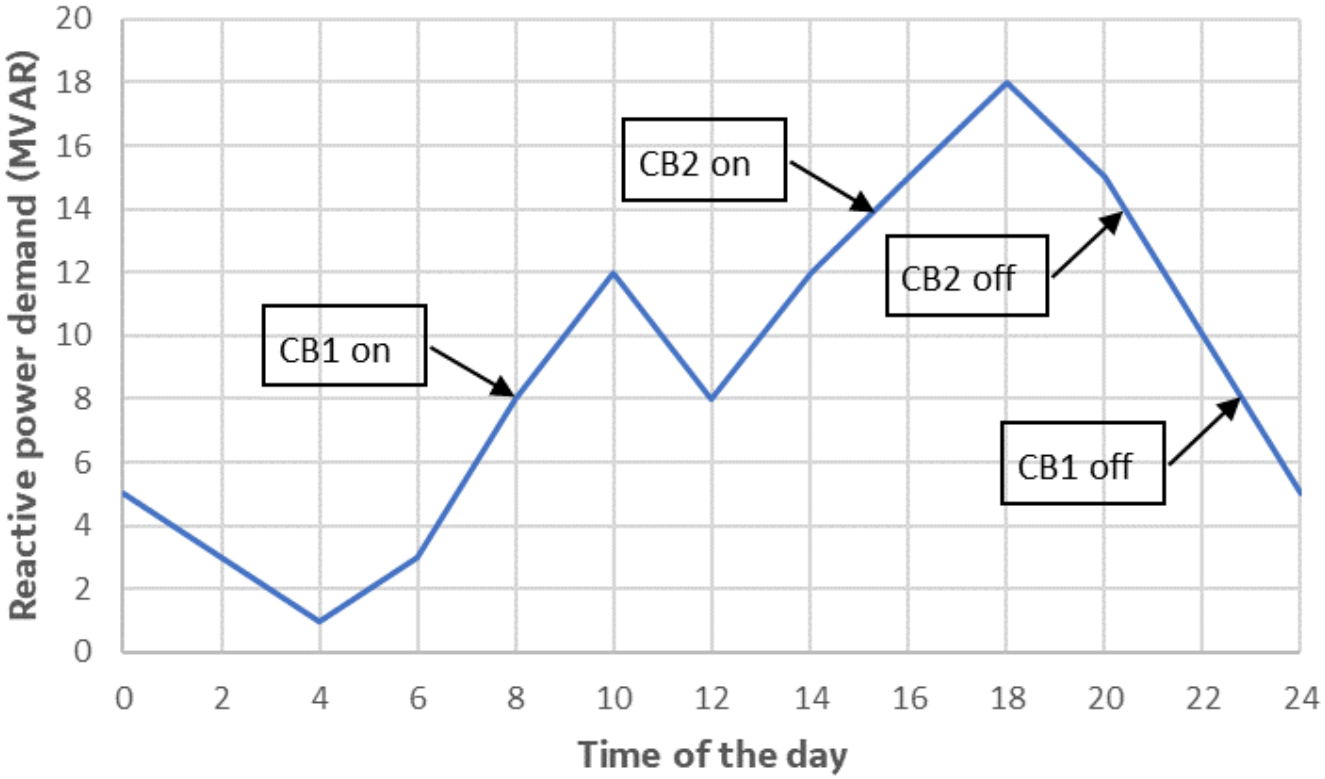

Methods to Control Voltage/VARs

B. Voltage measurement-based automatic control

- Primary objective of voltage support, installed at the major transmission and distribution buses serving large geographic area
- Switching the capacitor bank in results in a voltage rise at the capacitor bank location

$$\Delta V \approx \frac{I_C}{I_{SC}} \approx \frac{Q_C}{Q_{SC}} \times 100\%$$

- To minimize effect on power quality for the customers, voltage change is recommended to be within 2-3% range for distribution systems and <5% for transmission systems

Methods to Control Voltage/VARs

B. Voltage measurement-based automatic control

- Capacitor bank located at a distribution station serving a critical customer located downstream on a radial line, may be enhanced with a voltage drop compensation

$$V_L = V_{ST} - I_L \times Z$$

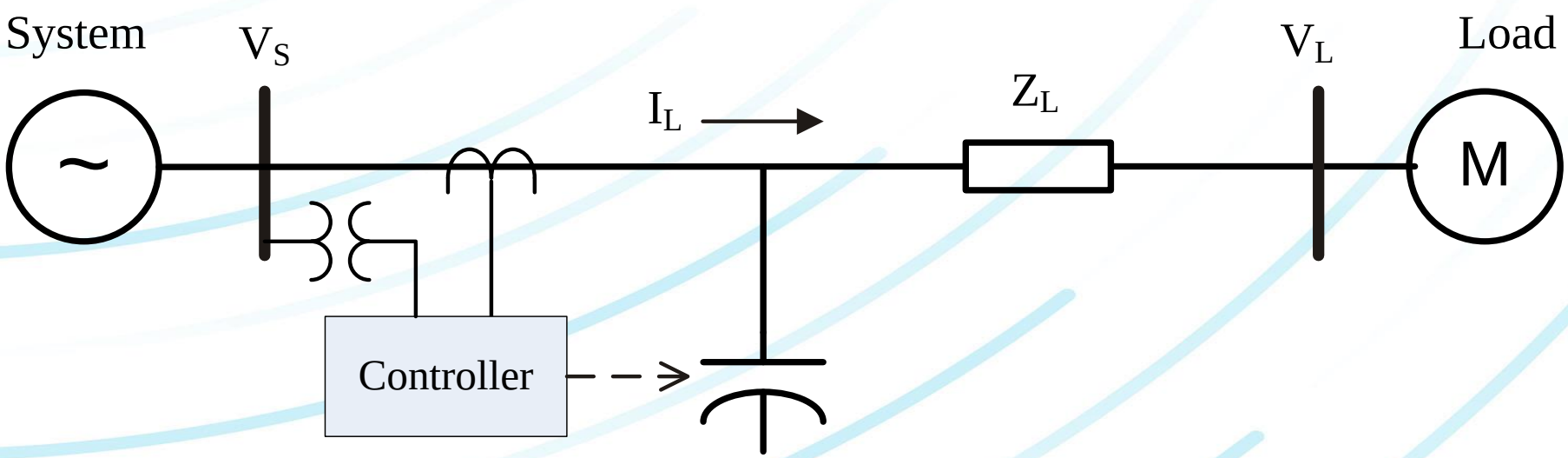

Methods to Control Voltage/VARs

B. Voltage measurement-based automatic control

- When multiple banks are used to control voltage, it's important that all controllers respond to the same voltage, V1, V_{LL}
- Set the close voltage settings lower than the open voltage setting by more than the voltage change expected from capacitor switching, plus margin
- Coordinate between multiple banks in the area, which is achieved by proper voltage level setting value and time delay
- Coordinate with a load tap changer (LTC)

Methods to Control Voltage/VARs

B. Voltage measurement-based automatic control

- LTC regulate voltage in steps of 0.625% to 2.5% with a time delay 1-3 minutes, switching on a capacitor bank can give similar effect but add VARs and improve PF
- Exclude possible counter action between these two control devices

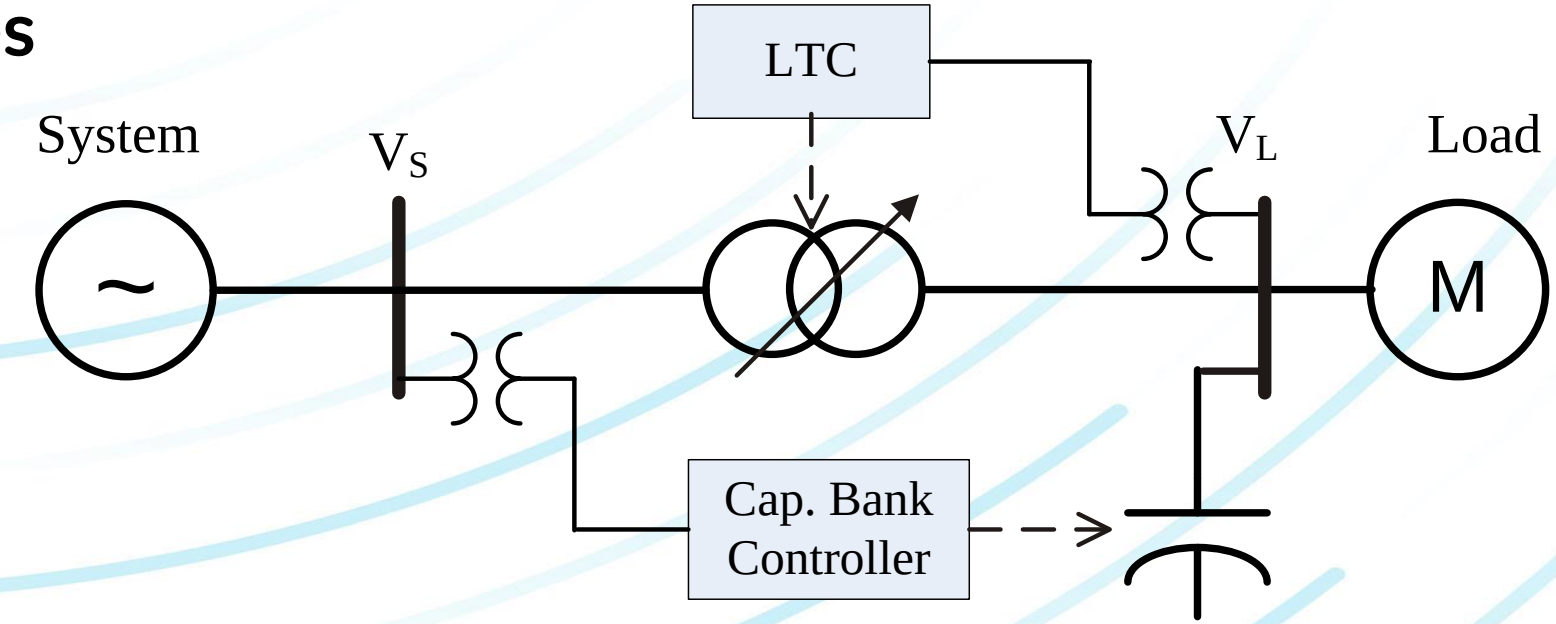

Methods to Control Voltage/VARs

C. Reactive power-based control

- Directly provides all benefits of the shunt capacitor banks
- Can be used on both transmission and distribution substations

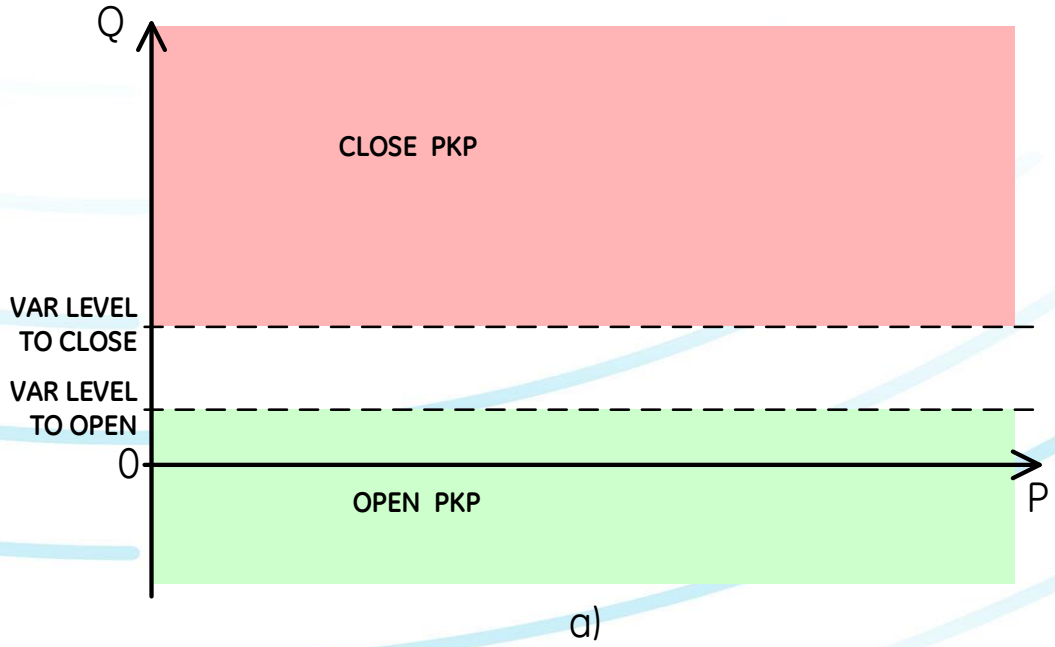

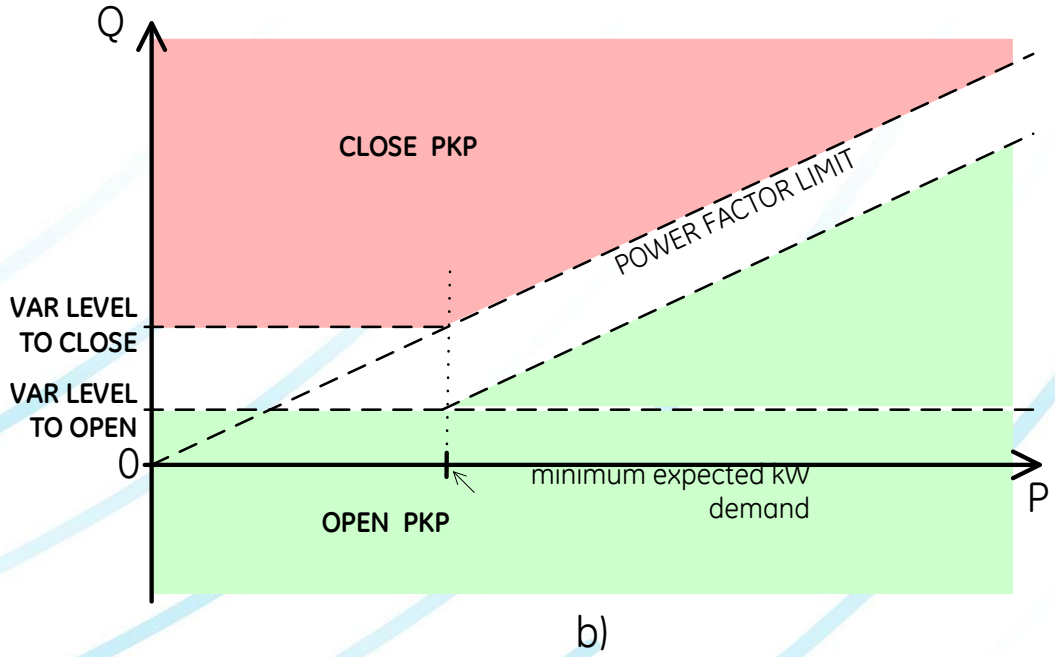

Methods to Control Voltage/VARs

D. Power factor-based control

- Although it's looking attractive, in general, power factor alone is not a good basis to control capacitor bank
- Because power factor measurement itself cannot distinguish between low load and high load, may result in the leading power
- At low load it can also cause a "pumping" condition
- At high loads possible to use power factor-based control, which requires adding VAR or current measurement to distinguish

Methods to Control Voltage/VARs

E. Temperature and current-based control

- Although temperature and current magnitude increases are an indication of the VAR demand, they are not giving direct measurement of the VAR deficit, low PF or voltage decrease
- These methods are not preferred when measurements of the voltage and current are available
- Possible when direct correlation between temperature/current and voltage/VAR change is well known

Methods to Control voltage/VARs

F. Manual control

- Manual control, local or remote, still can be used by the operator for switching the capacitor bank On/Off depending on system conditions
- With the communications available today, remote control is very attractive
- Local control may still be needed as well in case of communications failures and emergency situation

Transients Control

- Energization of the shunt capacitor bank creates severe transient over-voltages, affecting insulation of the adjacent equipment
- 230kV 26MVAR bank energization where all 3 breaker poles were closed simultaneously with phase A at the voltage peak

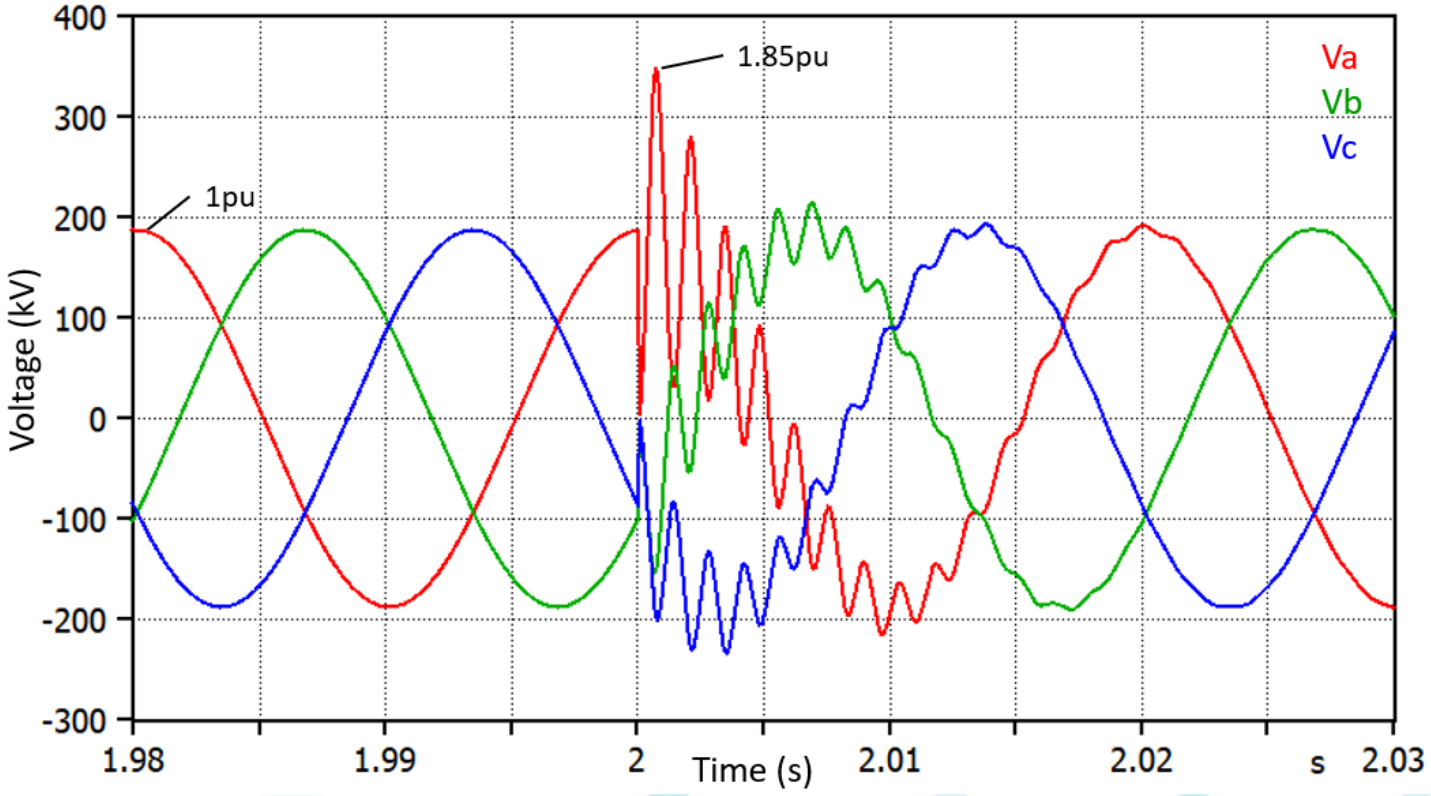

Transients control

- Capacitor bank energization transient frequencies are from 300Hz to 1kHz
- To reduce these over-voltages, it is desirable to energize each phase separately close to voltage zero-crossings

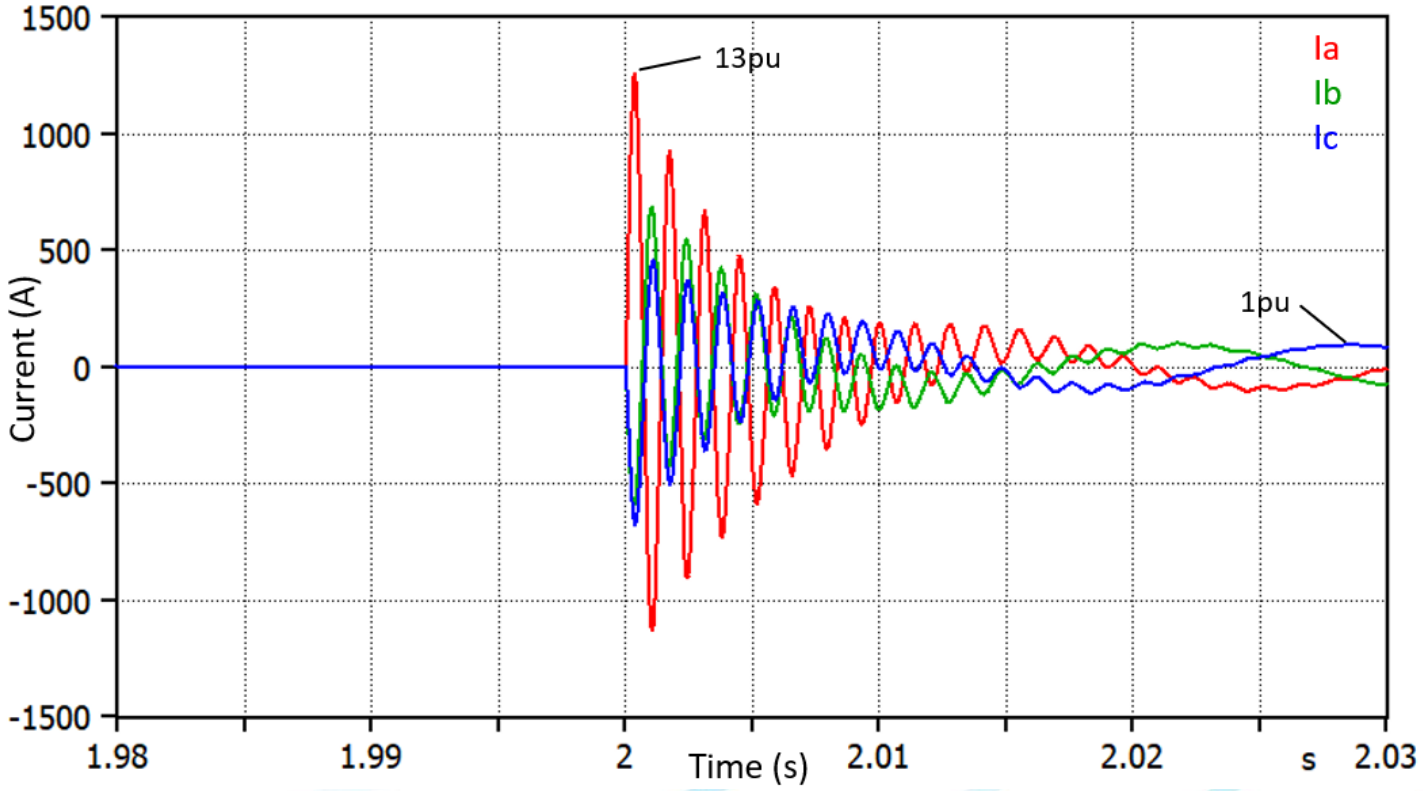

Transients Control

- Capacitor bank de-energization can cause breaker restrike
- The worst case voltage is interruption at the phase voltage - 2 times peak system line to ground voltage (2pu) appears across the breaker contact

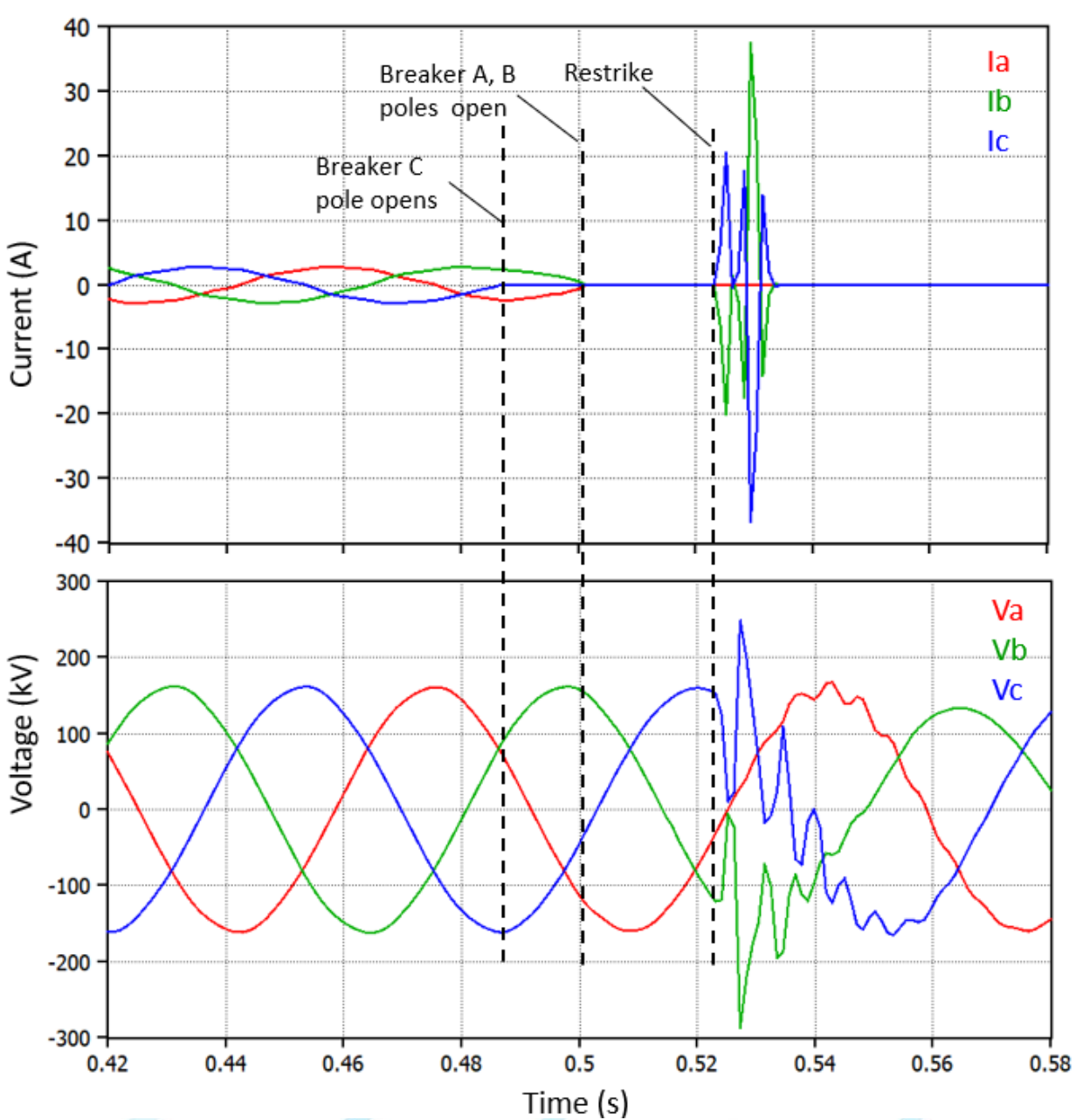

Interlocking

- Capacitor bank cannot be re-energized immediately, as capacitors need to be discharged
- 5 minutes delay is frequently used in the industry, re-energizing capacitor sooner or later may be required and can be calculated

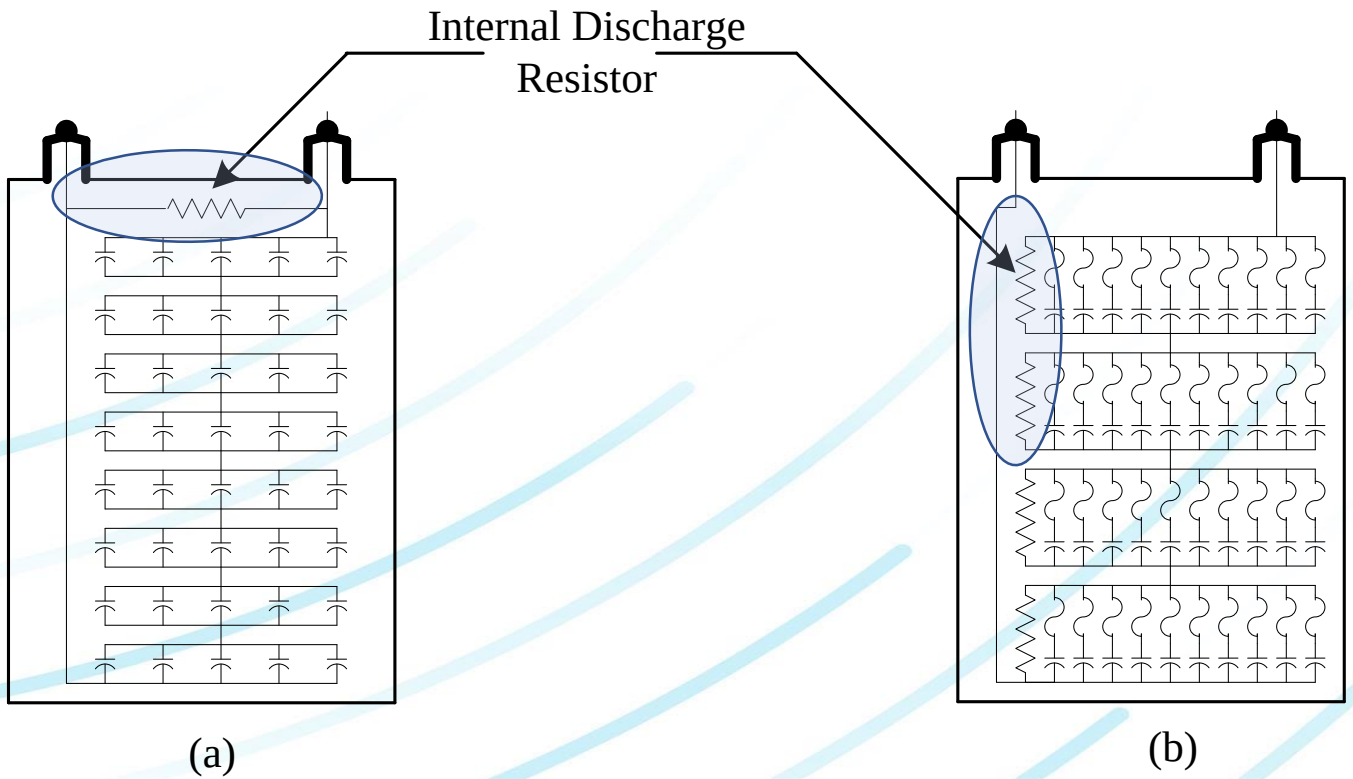

Interlocking

- Capacitor control includes On/Off commands from various sources protective trips, local/remote/auto close and open commands
- It is important, for safety and administrative reasons, that the control maintains remote/local and auto/manual privileges
- It is important to open the capacitor bank switching device when the connection point to the system de-energizes with subsequent reclosure
- This is easily accomplished by tripping the switching device with an under-voltage element set to operate on loss of connection point voltage with a time delay less than the line reclosing time

Interlocking

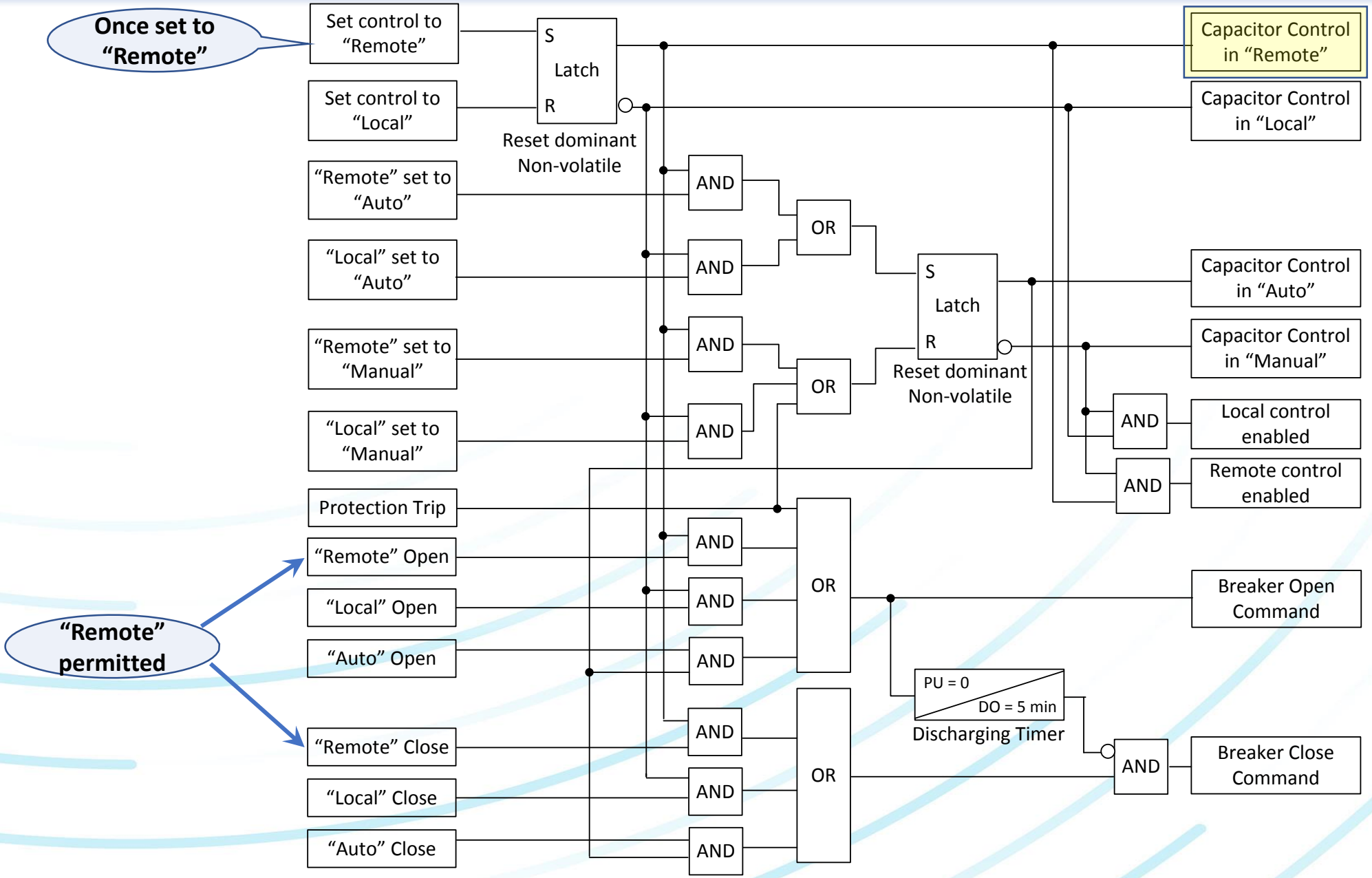

Optimizing Multiple Banks Control and Coordination with Other Volt/VAR Controls

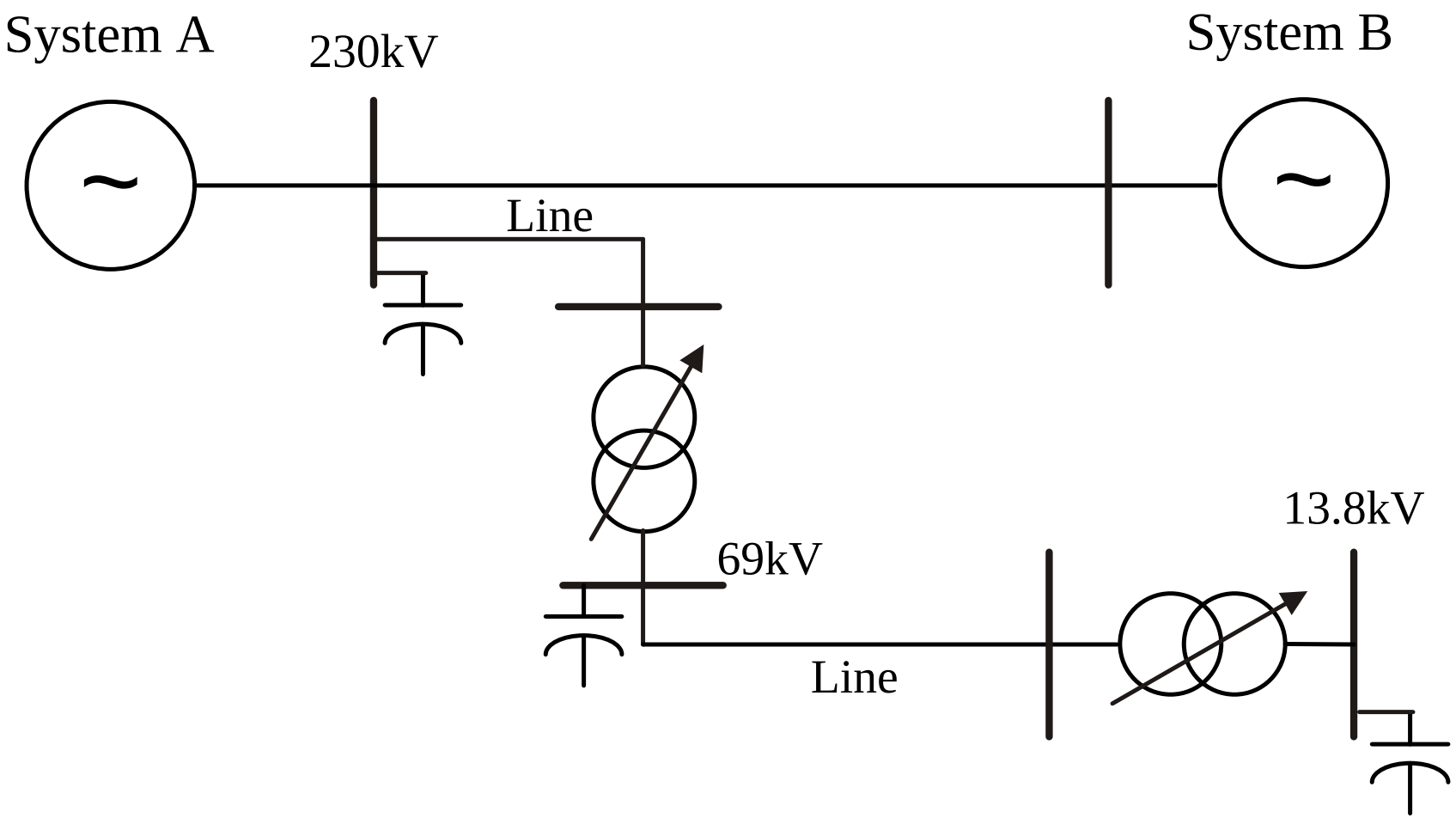

Optimizing Multiple Banks Control and Coordination with Other Volt/VAR Controls

- In reality there are many capacitor banks and other Volt/VAR regulating apparatus on the transmission, sub-transmission and distribution substations
- Volt/VAR regulating problem becomes multi-dimensional and very complicated
- Another requirement is to keep the number of switching operations for both capacitor banks and LTCs as low as possible to extend the life of switching devices
- Optimization programs available for the system planner are the right answer to set and coordinate controllers

Conclusions

- Modern capacitor bank controllers offer many options and functionality to control capacitor banks for voltage/VAR regulation
- They allow manual (local or remote) or automatic control based on the available measurements
- They also provide interlocking means to ensure safe operation of the capacitor banks
- When it comes to coordination with other devices controlling voltage and VAR, it becomes quite complicated
- Distribution Management Systems can provide a centralized Volt/VAR strategy by taking measurements from multiple points of the system and controlling capacitor banks and LTCs remotely

Thank You

Questions?