Process Bus for Bus Differential – Challenges, Solutions, and Opportunities

The 72nd Annual Conference for Protective Relay Engineers

Busbar protection

- busbars are used to connect electrical elements like generators, transformers, lines or feeders in a switchyard or switchgear
- there are a lot of different types of busbars used in our industry
- busbars are important parts of the power system

- electrical faults on busbars often occur with **high short circuit currents**
- **fast fault clearing time** is required to maintain the stability of the power system
- busbar protection need to be **stable in case of external** faults because losing a busbar has severe impact to the power system

Basic principle of bus differential protection

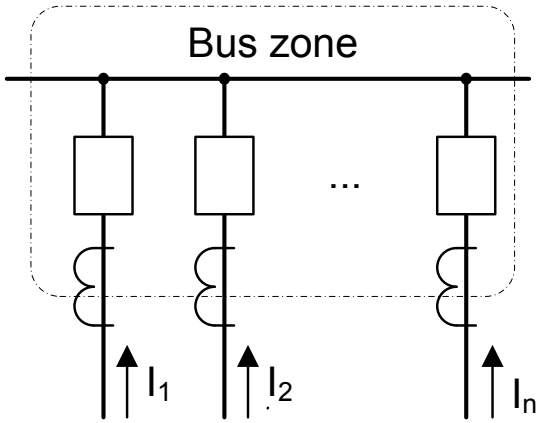

- bus differential protection is based on Kirchhoff's current law

$$\sum_{k=1}^{n} I_k = 0$$

- the protected zone of bus differential protection is defined by the location of the current transformer
- high selectivity is reached and no additional time delay is needed
  this guaranties a high speed of bus differential protection
- the availability and the characteristic of the current transformer at the protected zone have a major impact on the selection of the busbar protection scheme

Comparison of different bus differential schemes

	Selectivity	Speed	Sensitivity	Security	CT-Require-ments
Partial differential overcurrent	-	-	-	-	+
Differentially connected overcurrent	+	o	o	-	o
High-impedance differential	+	+	+	+	-
Low-impedance differential	+	+	o	+	+

+ excellent

o good

- not good

- partial differential overcurrent can be used if CT's are not available for all bus elements
- high impedance bus differential protection offers the best performance regarding selectivity, speed, sensitivity and security but needs dedicated CT which must be of same type and CT ratio
- low-impedance differential schemes can reach nearly the same performance with much lower CT requirements

Basic principle of low impedance bus differential protection

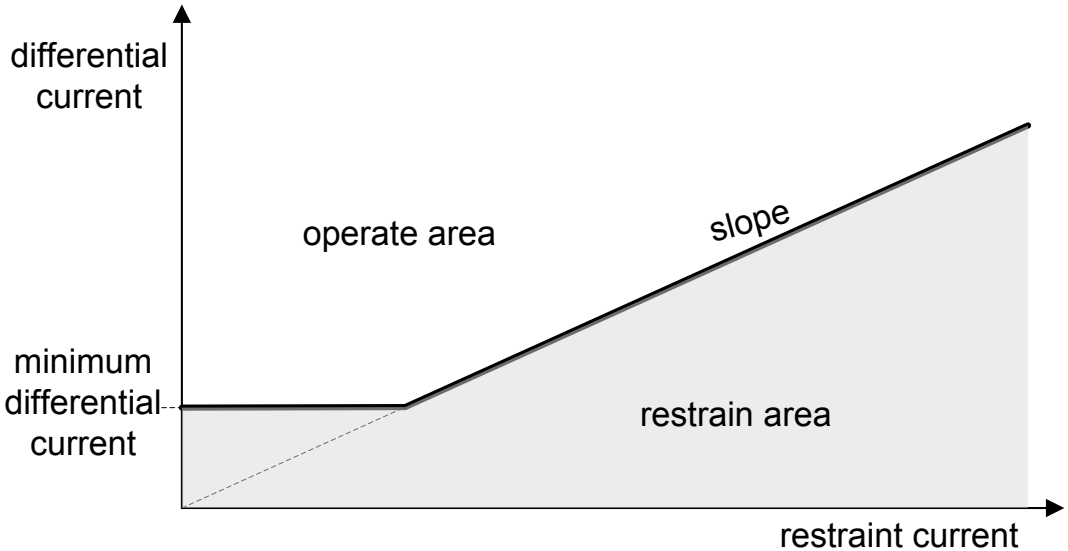

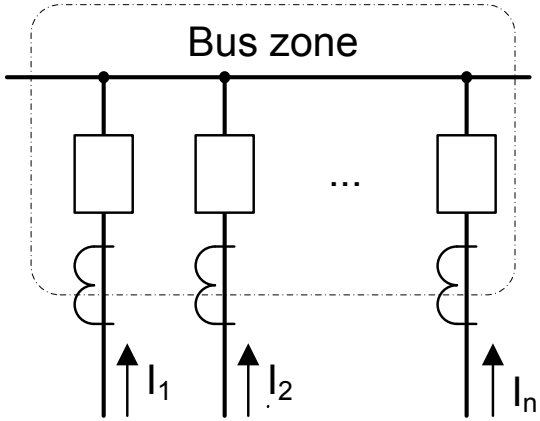

- the operating quantity I_{diff} is equal to the magnitude of the sum of all currents flowing into the protected zone

$$I_{diff} = \left| \sum_{k=1}^{n} i_k \right|$$

- a restraint current I_{res} is created and a trip command is only given if the differential current exceeds a minimum differential current setting and a certain portion of the restraint current like shown in the figure

$$I_{res} = \sum_{k=1}^{n} \left| i_k \right|$$

Two general kinds of bus differential algorithm
1. protection based on pure samples

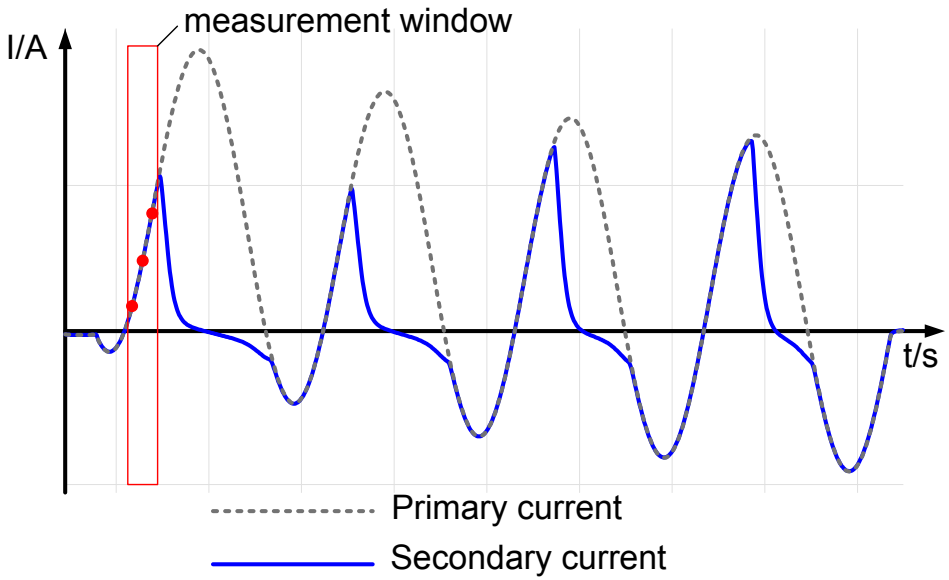

$$I_{\text{diff}} = \left| \sum_{k=1}^{n} \left(\sum_{l=1}^{m} i_{k,l} \right) \right|$$

$$I_{\text{res}} = \sum_{k=1}^{n} \left(\sum_{l=1}^{m} \left| i_{k,l} \right| \right)$$

k: consecutive number of bay / feeder
n: total number of bays / feeders
l: consecutive number sample
m: total number samples

- bus differential protection based on pure samples can generate a trip decision in a few milliseconds using a very short measurement window like shown in figure
- a trip for this bus fault with high short circuit current can be given before the current transformer starts to saturate

Two general kinds of bus differential algorithm
2. protection based on current phasors

- current phasors are used to form the operating and restraint quantities

$$I_{diff} = \left| \sum_{k=1}^{n} \underline{I}_k \right|$$

- all transients and the DC component are filtered out of the signal in best case

$$I_{res} = \sum_{k=1}^{n} \left| \underline{I}_k \right|$$

k: consecutive number of bay / feeder
n: total number of bays / feeders

- using current phasors instead of instantaneous values **<u>increases the sensitivity</u>** because the current phasors only contain the measurements of the fundamental frequency
- bus differential protection based on current phasors needs **<u>more time to generate a trip command</u>** because it needs at least a cycle of the fundamental frequency to calculate the current phasors

Architecture of centralized bus differential protection

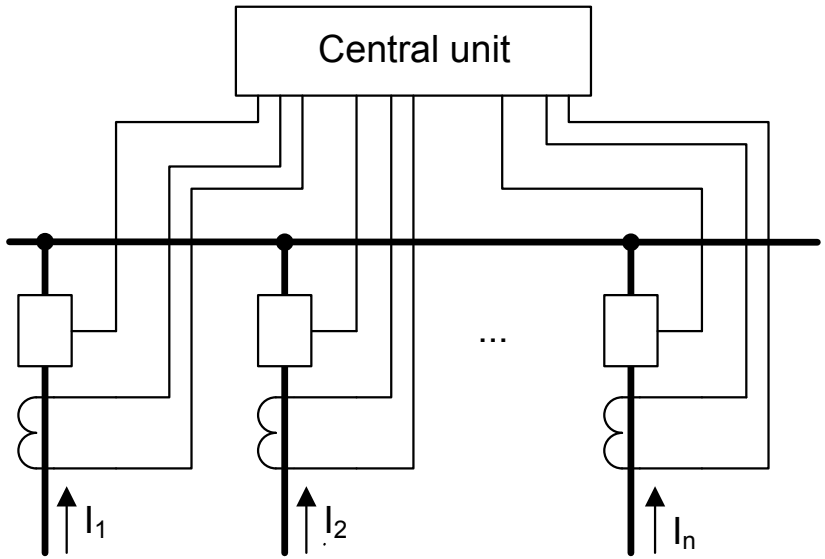

- for centralized bus differential protection all primary equipment like CT or auxiliary contacts of circuit breaker and disconnectors are connected via copper connections to the central unit

- in this scheme all data processing is done in the central unit
- due to this approach centralized bus differential protection scheme is limited to approximately 20 bays
- centralized busbar protection is mostly cheaper compared to a distributed solution, because of less hardware and engineering effort

Architecture of distributed bus differential protection

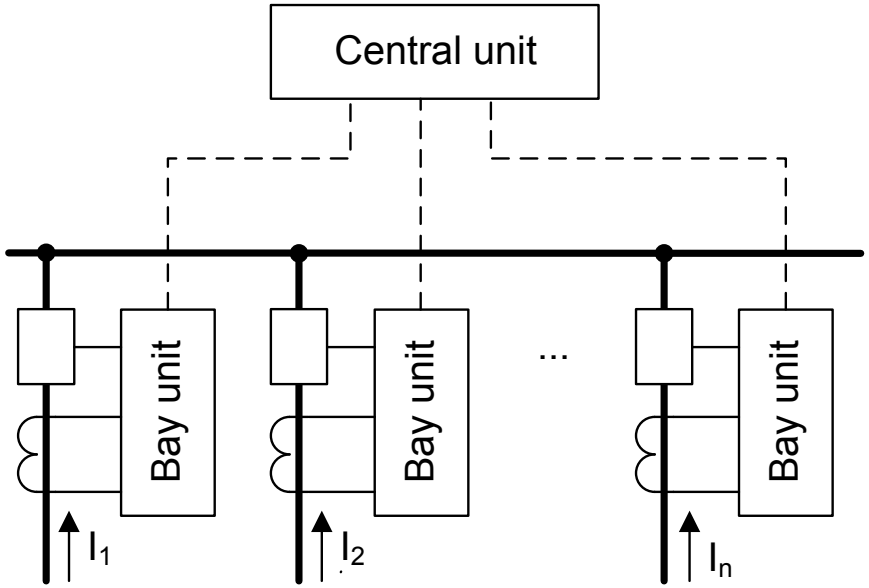

- bay units are installed at each bay to get all relevant data from the connected bay

- after pre-processing these data is sent via digital communication from the bay units to the central unit
- the differential algorithm is running in the central unit
- in case of a trip command this is transferred back to the bay units which give it to the connected circuit breaker

Advantages of distributed bus differential protection

1. Distributed busbar protection is especially applied at wide area air isolated substations. The wiring of primary CTs via a long-distance lead to a high burden of the CTs. A high burden of the CTs lead to an earlier saturation of the CTs, which is an inherent problem for differential protection.
2. At distributed busbar protection a redundant feeder protection (CBFP, OCP, EFP etc.) in the bay units is possible.
3. Distributed busbar protection can typically cover a higher number of feeders.
4. Distributed busbar protection can typically easily be extended.

- today it is possible to connect merging units to a centralized bus differential protection
- using this approach the difference between centralized and distributed bus differential protection will disappear

Architecture of distributed bus differential protection using merging units

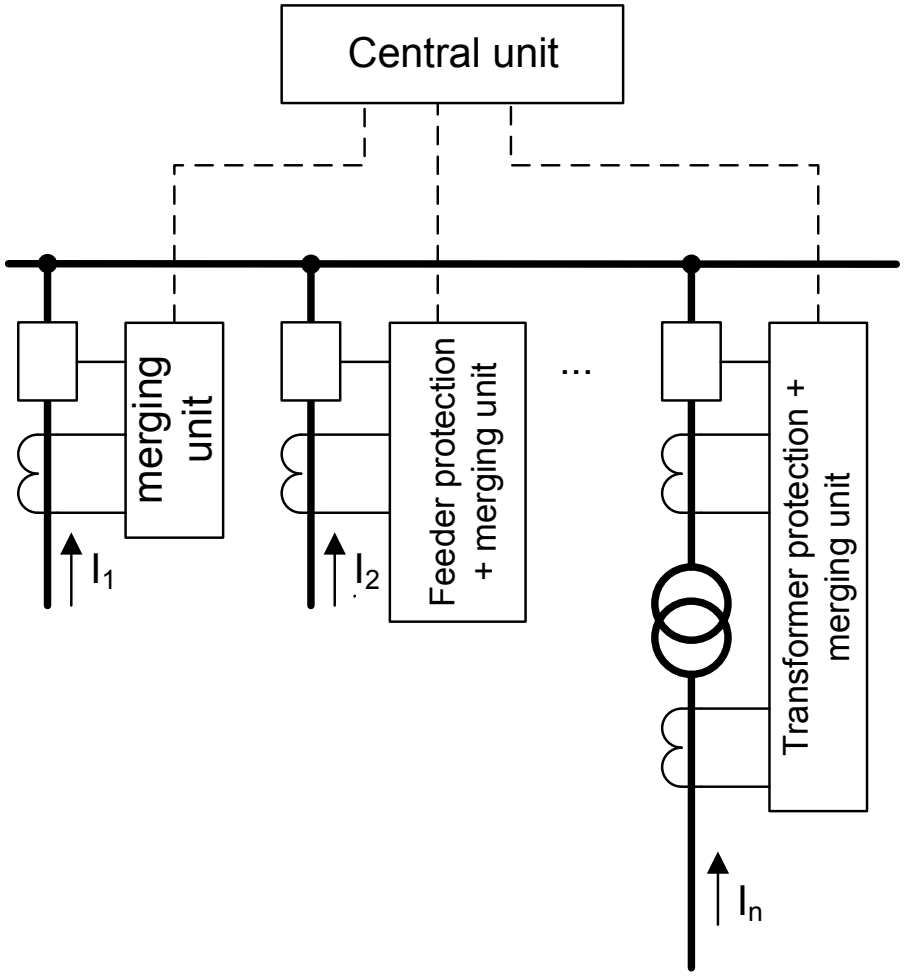

- distributed busbar differential scheme can be established using merging units as bay units
- a merging unit can be designed as a plain device only feeding the central device of bus differential protection with sampled measured values
- the merging unit can also be implemented in a feeder or transformer protection relay
- this concept is used to save a lot of relays, wiring and engineering work

Architecture of distributed bus differential protection using plain merging units only

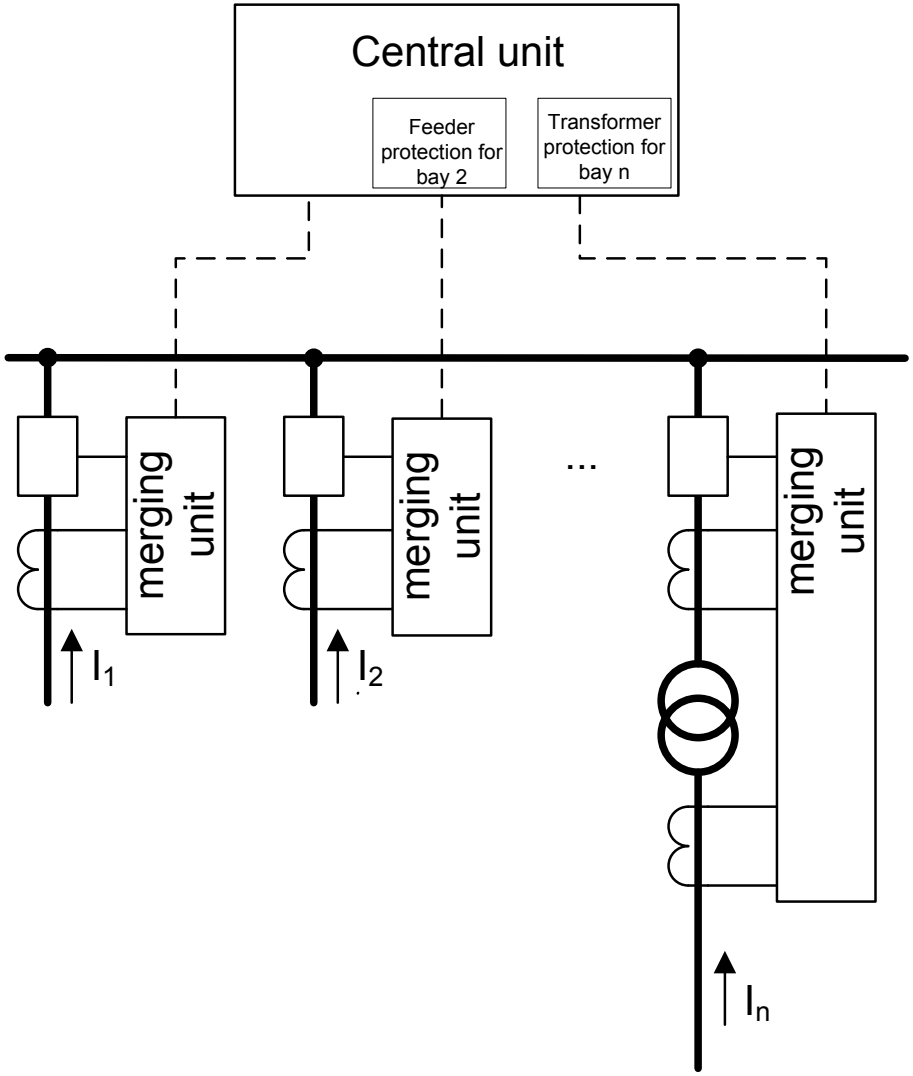

- the same application as shown on the last slide could be is designed in a different way
- all bays are equipped with plain merging units
- the bay specific protection functions are located in the central unit of bus differential protection
- feeder protection for bay 2 and transformer protection for bay n are running in the central unit of bus differential protection

Communication architecture of classical distributed bus differential protection

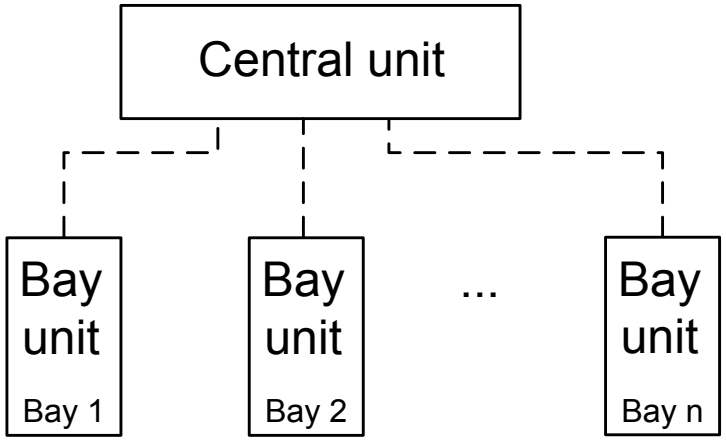

- the classical proprietary solutions of distributed bus protection use field devices which are connected to the central device in a **star architecture without any communication redundancy**

- the use of merging units and IEC61850 enables a lot of different solutions for the communication architecture of a bus differential scheme

Communication architecture of distributed bus differential protection using IEC61850

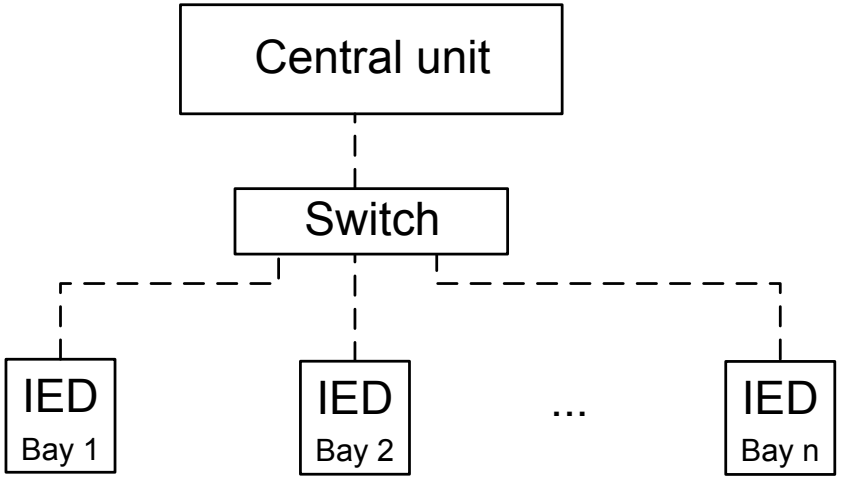

- the bay units shown on the last slide are replaced by IED's containing the merging unit function and the capability to maintain binary signals from and to the relevant switchgear in the connected bay
- these IED's are connected to an Ethernet switch which is connected to the central unit of the bus differential protection

Redundant Communication of distributed bus differential protection using IEC61850 star structure according to PRP

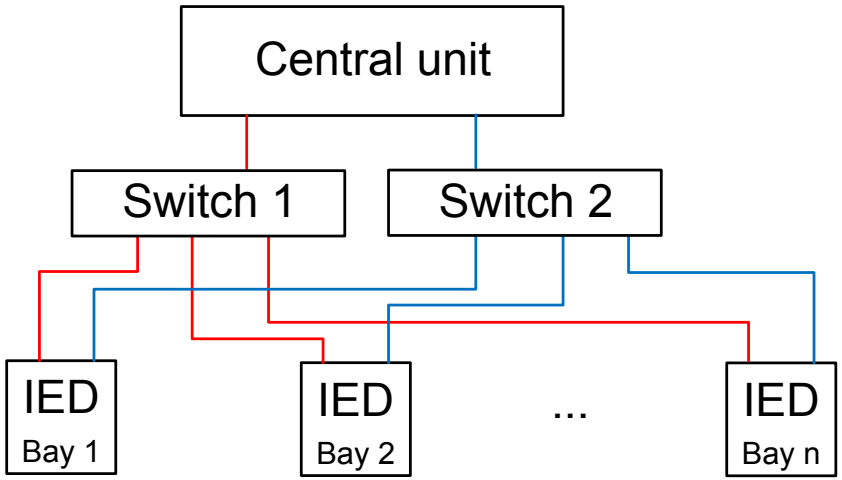

- if communication redundancy is needed each IED can be connected separately to two different switches which are connected in parallel to the central unit
- this communication architecture is used for redundancy according to the PRP standard

Redundant Communication of distributed bus differential protection using IEC61850 ring structure according to HSR

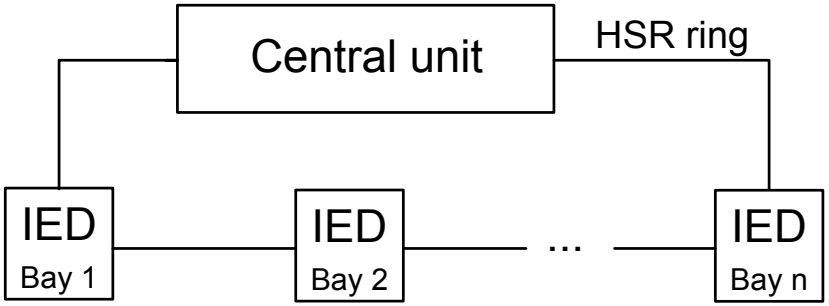

- another solution for communication redundancy according to the Standard HSR is shown in the figure above
- the IED's acting as bay units of bus differential protection are connected in a communication ring with the central unit of bus differential protection

Redundant Protection for distributed bus differential protection using IEC61850 ring structure according to HSR

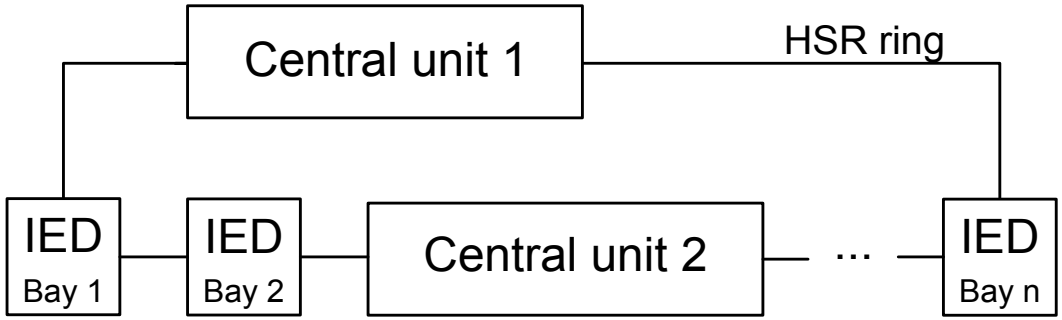

- additional to the communication redundancy a protection redundancy could be implemented
- a second central unit of bus differential protection is added to the communication ring
- this second central unit is able to receive the same data from the bay units and run redundant algorithm of bus differential protection

Time synchronization for distributed bus differential protection using IEEE 1588

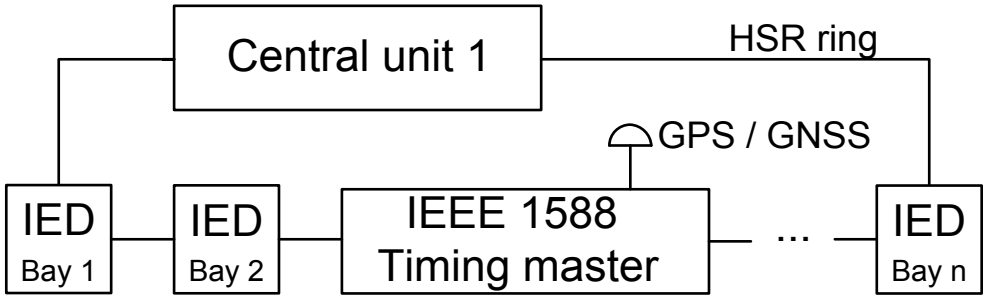

- time synchronization is utmost important for the proper function of a distributed bus differential scheme
- using sampled measured values according to IEC61869-9 the sampling of the currents in the different bay units has to be done at the same instances of time with synchronization accuracy better than 1us
- today the typical application for precise time synchronization is done using a commercial clock which can provide time synchronization according to IEEE 1588 with the power profile IEEE C37.238
- in general this master clock is an additional device like shown above

Time synchronization for distributed bus differential protection using IEEE 1588

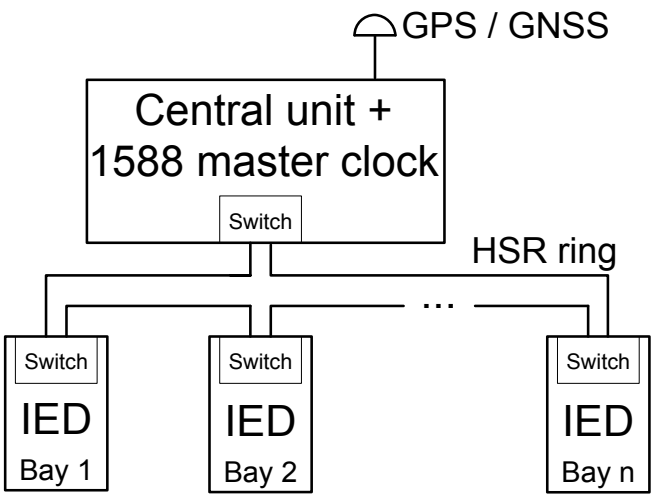

- the reliability of a bus differential scheme based on IEC61850 is decreased due to the need of additional devices like GPS clocks and switches

- this problem can be solved by a different composition of the system
- the master clock can be integrated in the central device of bus differential protection
- the switches to form the HSR ring could be implemented in each IED

Bus differential protection using NCIT

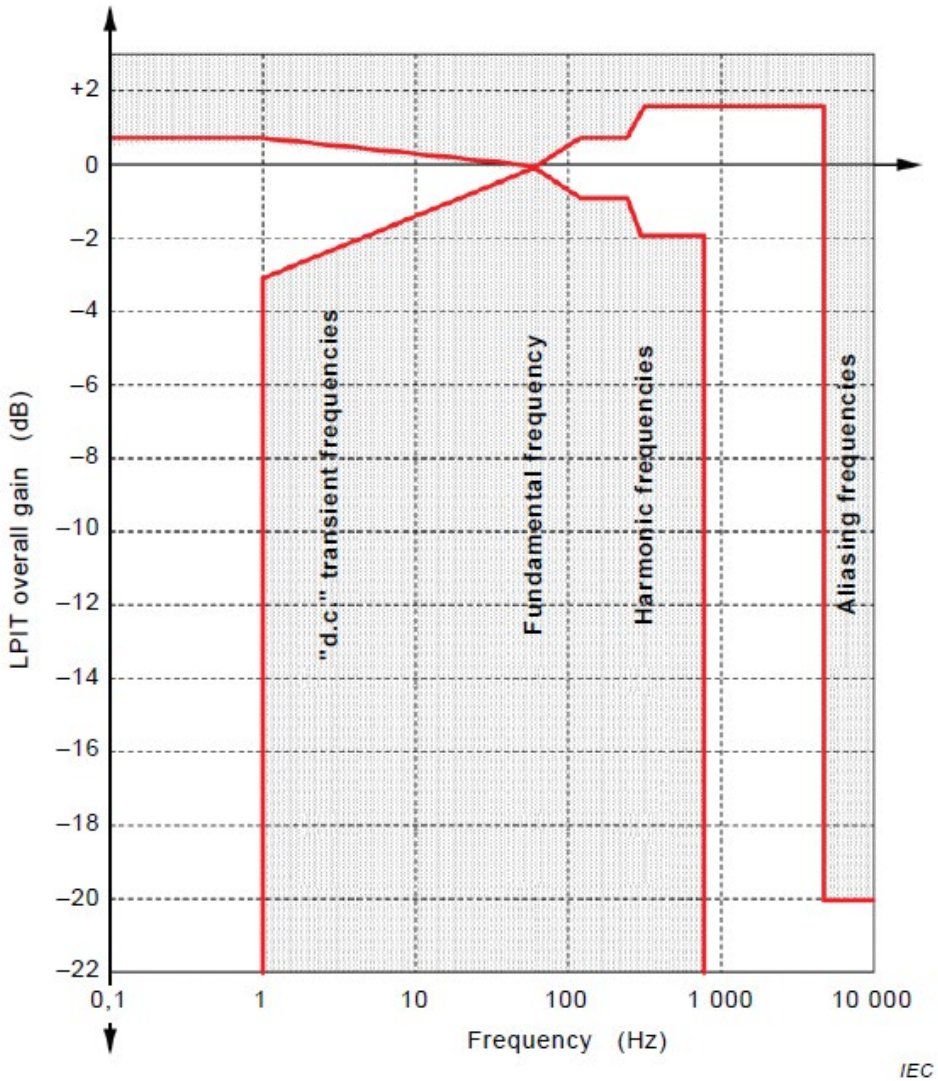

- if different types of instrument transformers are applied in a bus differential scheme, care must be taken about the stability of the algorithm
- different transient behavior of different types of instrument transformers can produce a wrong differential current
- according to IEC61869-6, Annex 6A an instrument transformer is permitted to transfer DC or is permitted to cut off the DC with a maximum high pass cutoff frequency of 1 Hz

Output signals of two different CT for a fault current with 100% DC offset

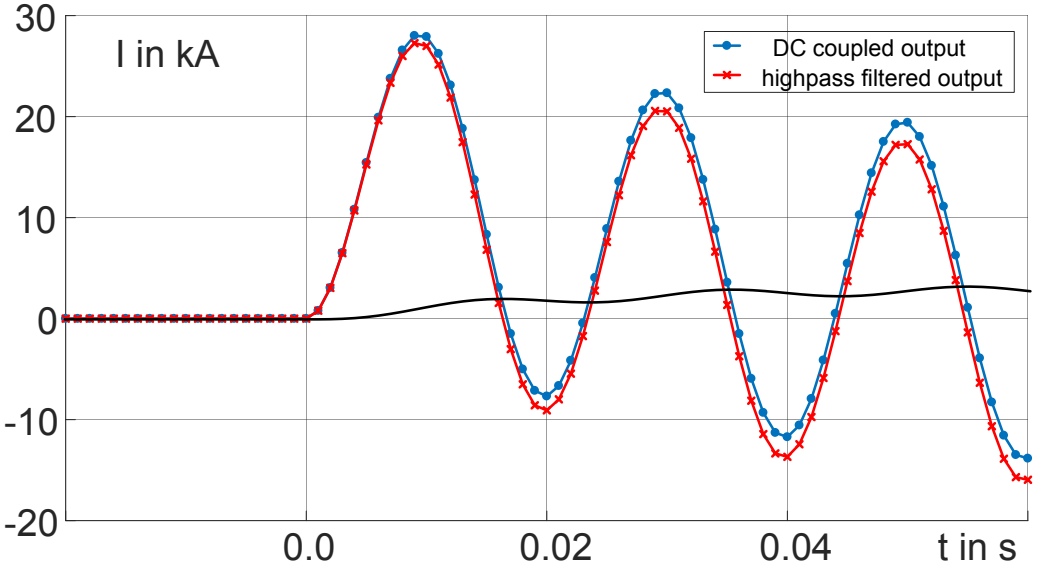

- based on this limitation a worst-case calculation can be done considering a fault current with 100% DC offset and a primary time constant of 60ms

- the blue curve represent the original fault current - this could be the output of an optical CT which is able to measure DC
- the red curve is the output of a CT with the maximum permitted high pass cutoff frequency of 1 Hz
- the black curve is the difference between the output signals of both CT's this difference signal would appear as a differential current!

Difference based on samples between two CT output signals for a fault current with 100% DC offset

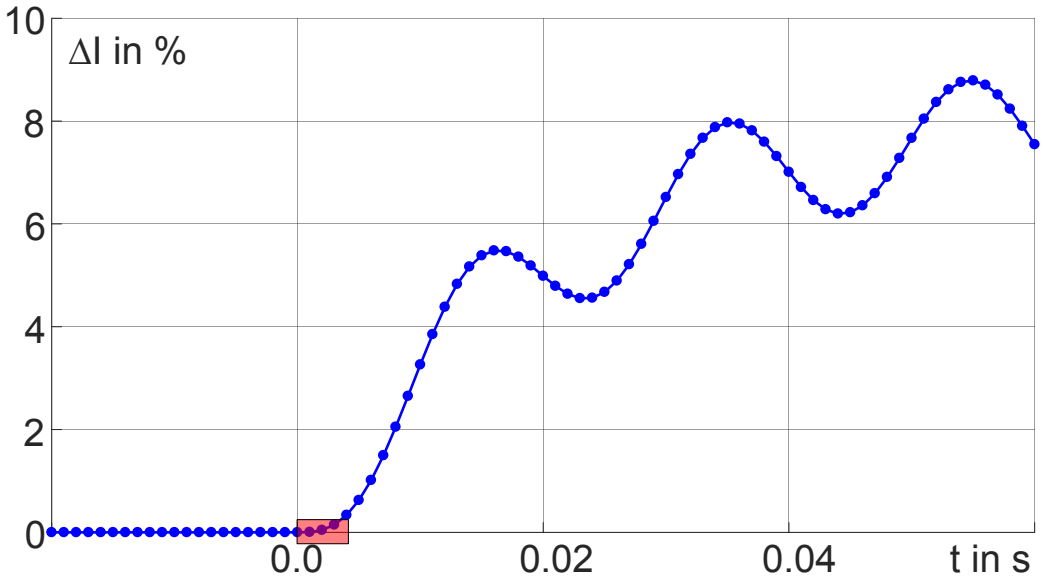

- figure left shows the difference between the two extreme CT output signals in more detail
- for the first 3 samples after fault inception the deviation is much less than 1% of the original signal

- using a differential protection algorithm based on samples no additional stabilization would be necessary for the first samples
- using this algorithm for a longer time 10% additional stabilization should be applied
- algorithm based on pure samples should be used only for a short time after fault inception
  after a full period algorithm based on current phasors reach a higher accuracy

Total vector error of two CT output signals for a fault current with 100% DC offset

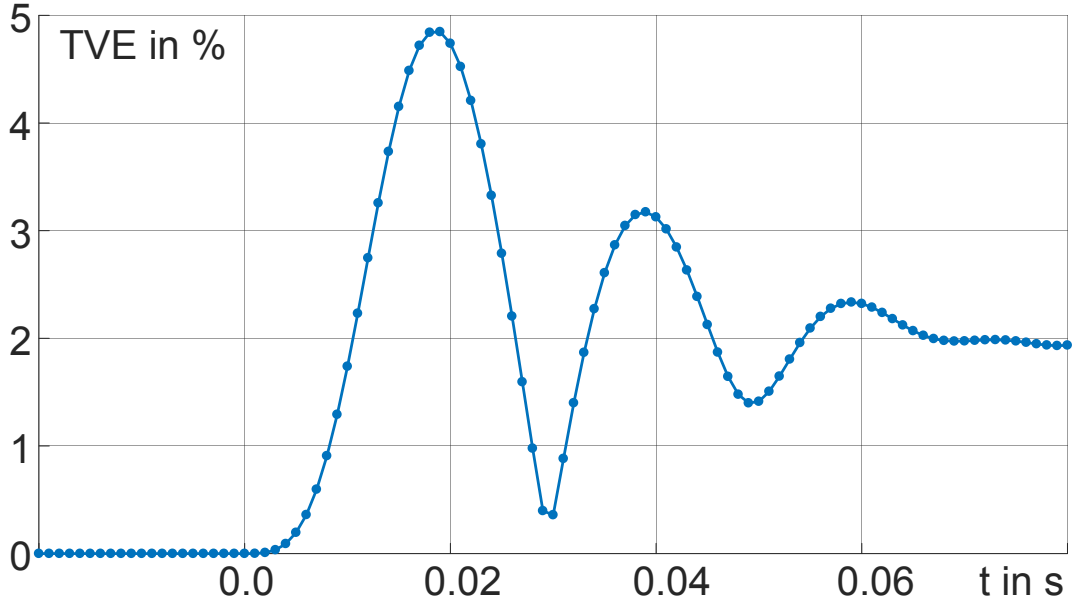

- for example both phasors are calculated using full cycle sinus and cosines filter
- figure left shows the total vector error based on the phasor deviation of both signals

- for phasor based bus differential algorithm this total vector error need to be covered by additional restrained current
- according to the coming standard IEC61850-7-4 edition 2.1 the high pass time constant of the CT with digital output should be given in form of a setting
- using this setting the signals coming from CT's with different high pass time constants can be transformed to signals with the same time constant

Conclusion

- It was shown that process bus will have a great impact to the design of bus differential protection.
- Due to the concept of merging unit as a function instead of a box, different schemes of centralized or distributed protection becomes possible.
- Process bus also enables the use of NCIT for low impedance bus differential protection.

Thank you for your attention!

Jörg Blumschein
Principal Key Expert Protection
EM DG SA&P LM&D PPM

Wernerwerkdamm 5
13629 Berlin

Phone: +49 (30) 386 20135
Fax: +49 (30) 386 25158

E-mail:
joerg.blumschein@siemens.com

siemens.com/answers