Performance Evaluation of an Enhanced Bus Differential Protection Relay

Nuwan Perera, K. Ponram
ERLPhase Power Technologies Ltd, Winnipeg, MB Canada

72nd Annual Conference for Protective Relay Engineers
TEXAS A&M

Presentation Outline

- Introduction to differential protection
- Protection concepts
- Simulations
- Test Results
- Conclusions

Introduction

- Dual slope characteristics of conventional relays

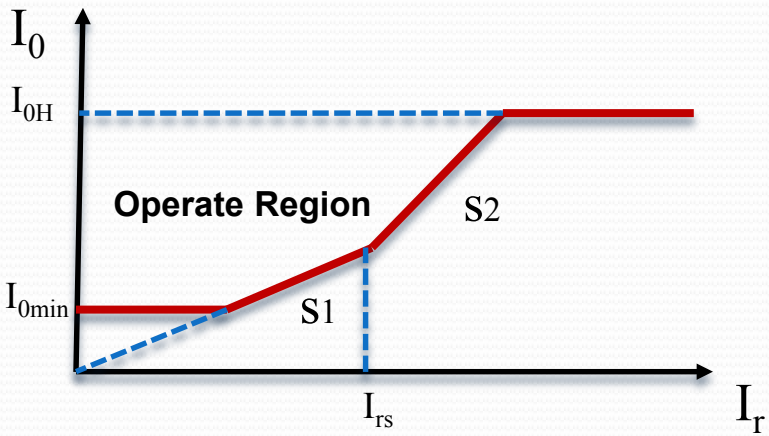

$I_0 = I_1 + I_2 + I_3 + I_4 + I_5 + I_6$
for all a, b, c phases

$I_r = (|I_1| + |I_2| + |I_3| + |I_4| + |I_5| + |I_6|) / 2$
for all a, b, c phases

- Dual slope provides some security against CT errors.
  - normal load conditions
  - external fault conditions

- Not adequate for all practical scenarios.
  - CT saturations during close-in external faults
  - subsidence currents present after clearing external faults

Methods for internal/external fault identification

- **Method A:** Phase angle comparison method
  - compares phase angles of currents
    - K. Narendra, G. Swift , D. Fedirchuk , A. Neufeld , "Efficient method for calculating the dot product in fault detection algorithm", US Patent 0254056, July 2010.

- **Method B:** Rate of change of differential method
  - compares rates of change of operating and restraint currents
    - K. Narendra, D. Fedirchuk and N. Zhang, "Differential rate of change method for busbar protection", US Patent. Pending (2010)

Phase Angle Comparison Method

- Compares phase angles of currents

Internal fault

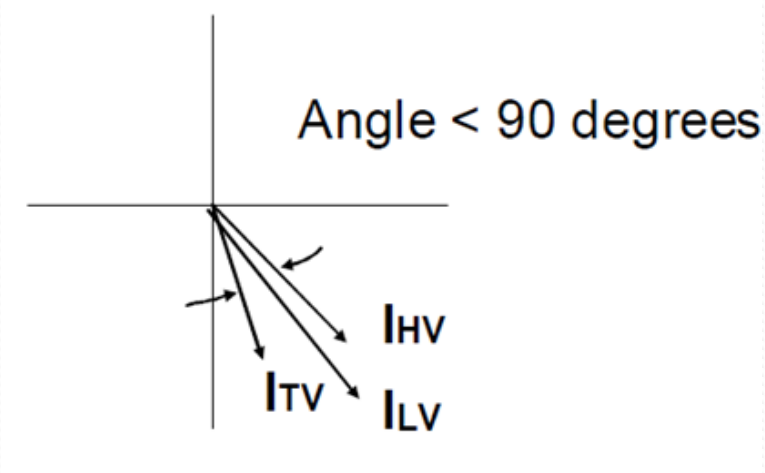

External fault

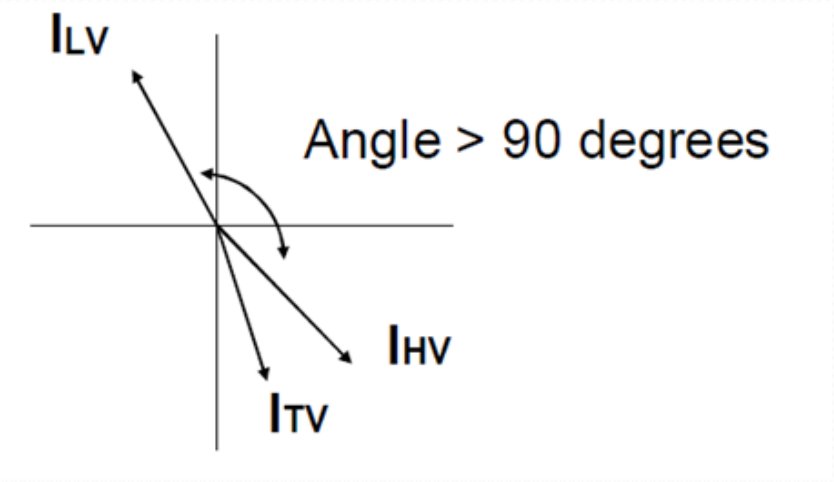

- This function may block the operation during high impedance internal faults if there is only one active source.

Rate of Change of Differential Method

- Compares rates of change of operating and restraint currents

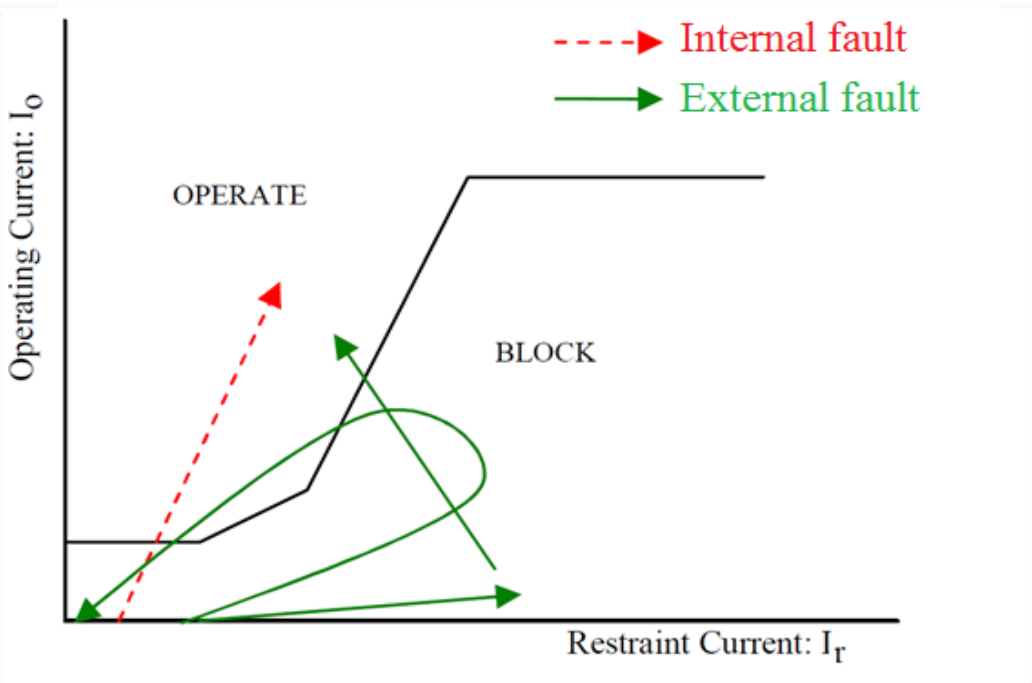

$$\frac{dI_0}{dt} \rangle \frac{dI_r}{dt} \rangle 0 \Rightarrow \text{Internal fault}$$

$$other\ cases \Rightarrow \text{External fault}$$

Filtering

Before

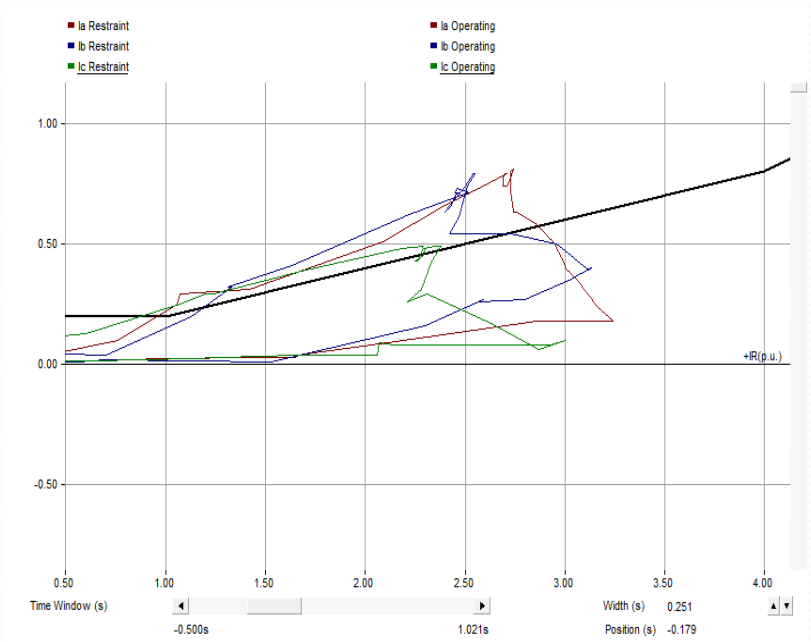

After

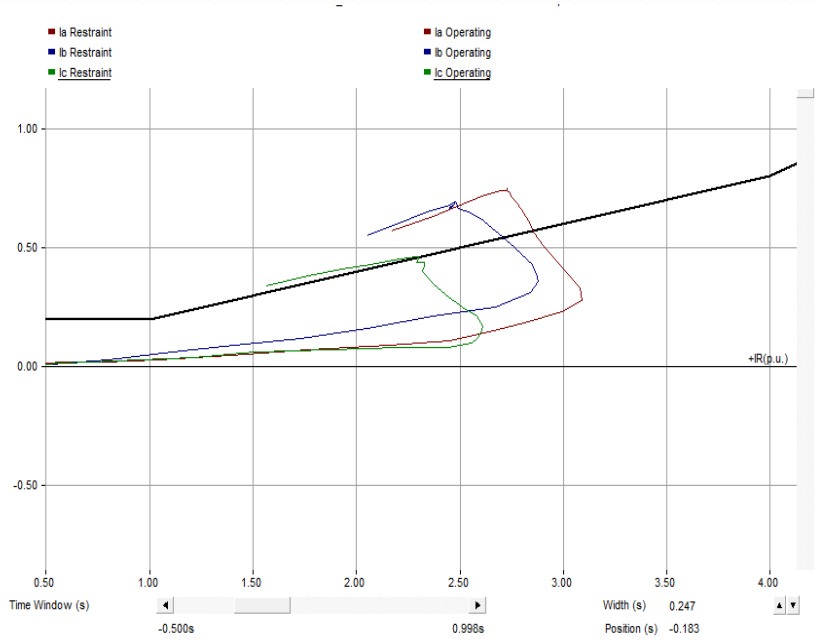

Overall Differential Protection Scheme

- Basic logic

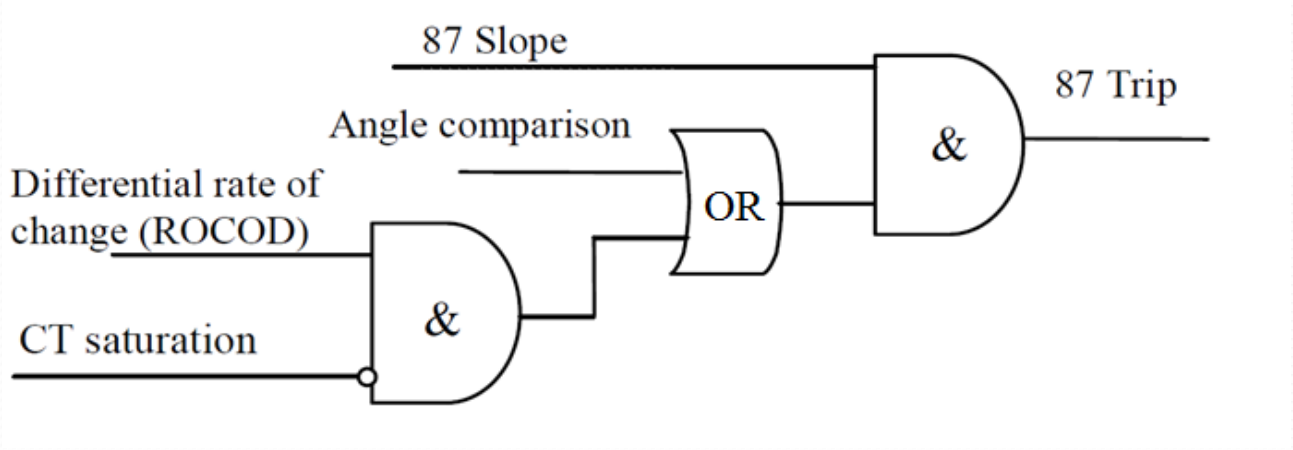

- Algorithm for detection of CT saturations
  - D. Fedirchuk, G. Li, Z. Zhang, D.S. Ouellette, "Electrical bus protection method and apparatus", US Patent - 7,199,991 B2, Issued April 2007.

Support for Multiple Feeders

- Support up to 24 feeders : 6 feeders per IED
- IEC 61850 9-2: 8 s/cycle

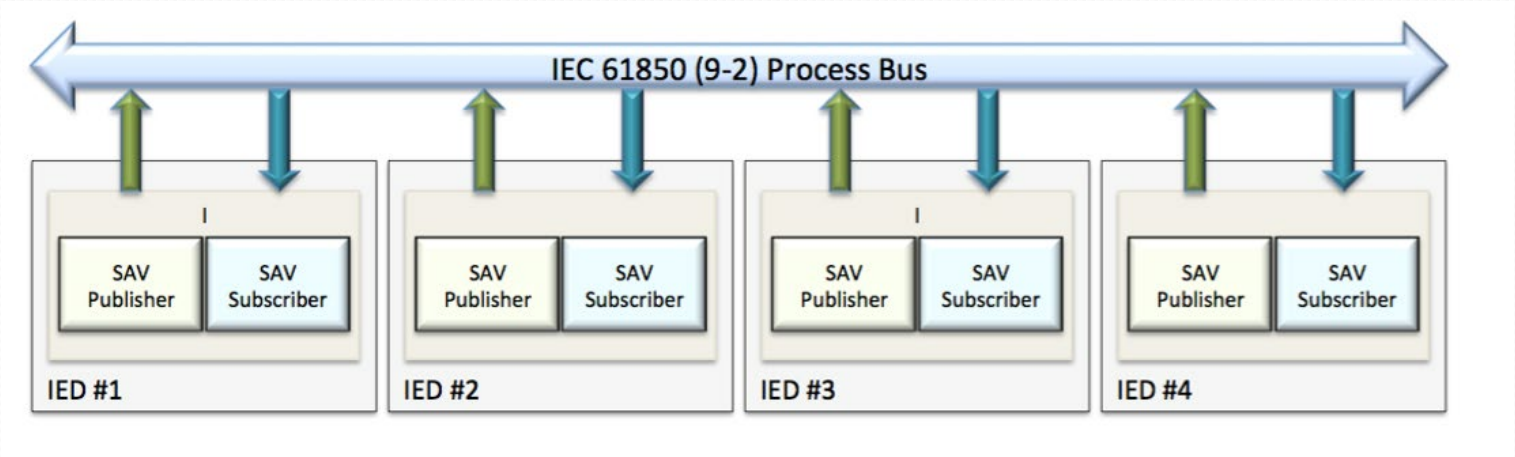

Support for Multiple Feeders with Two IEDs

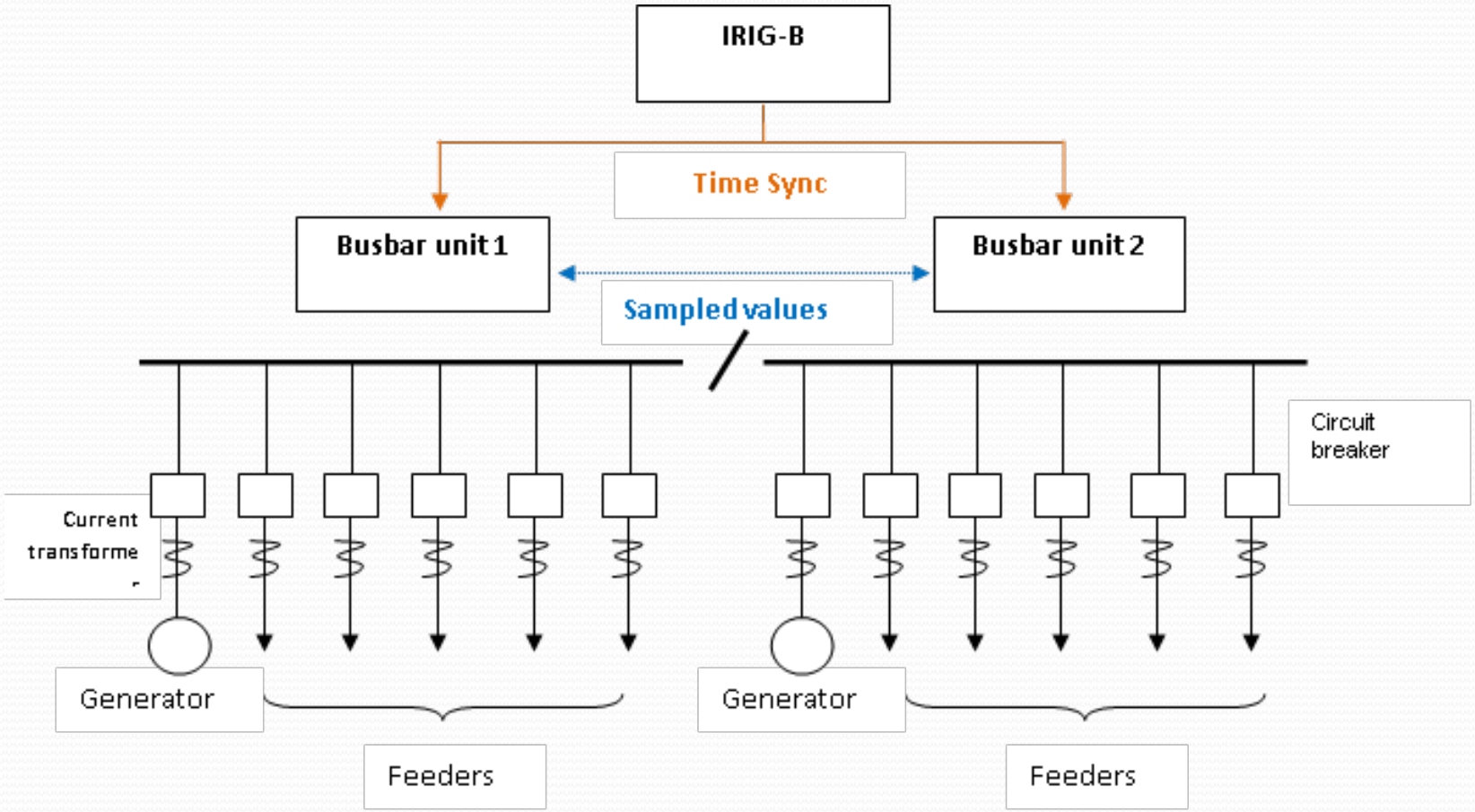

Test Setup

- Equipment setup for closed loop testing

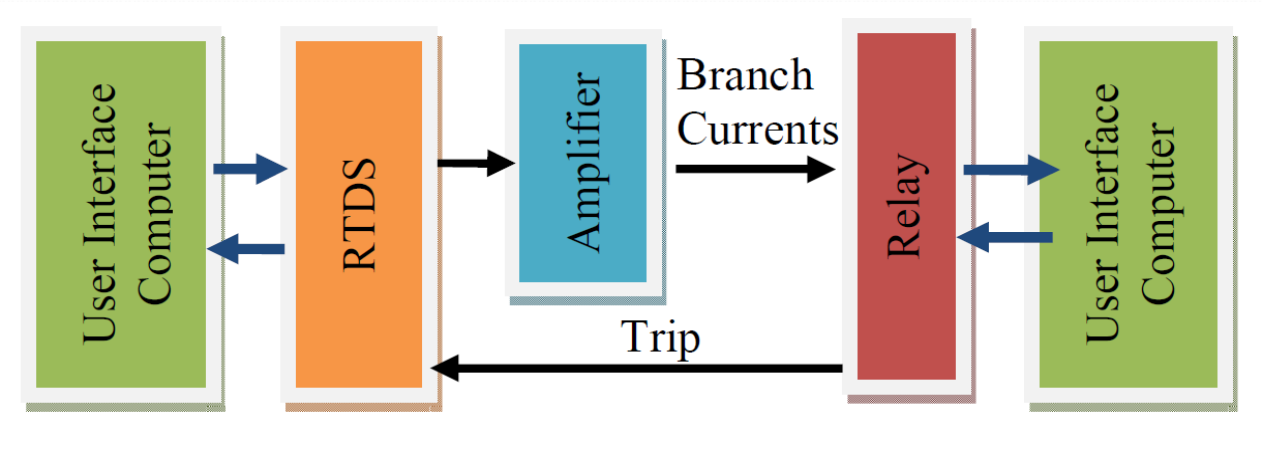

Test Network

- 230 kV test network

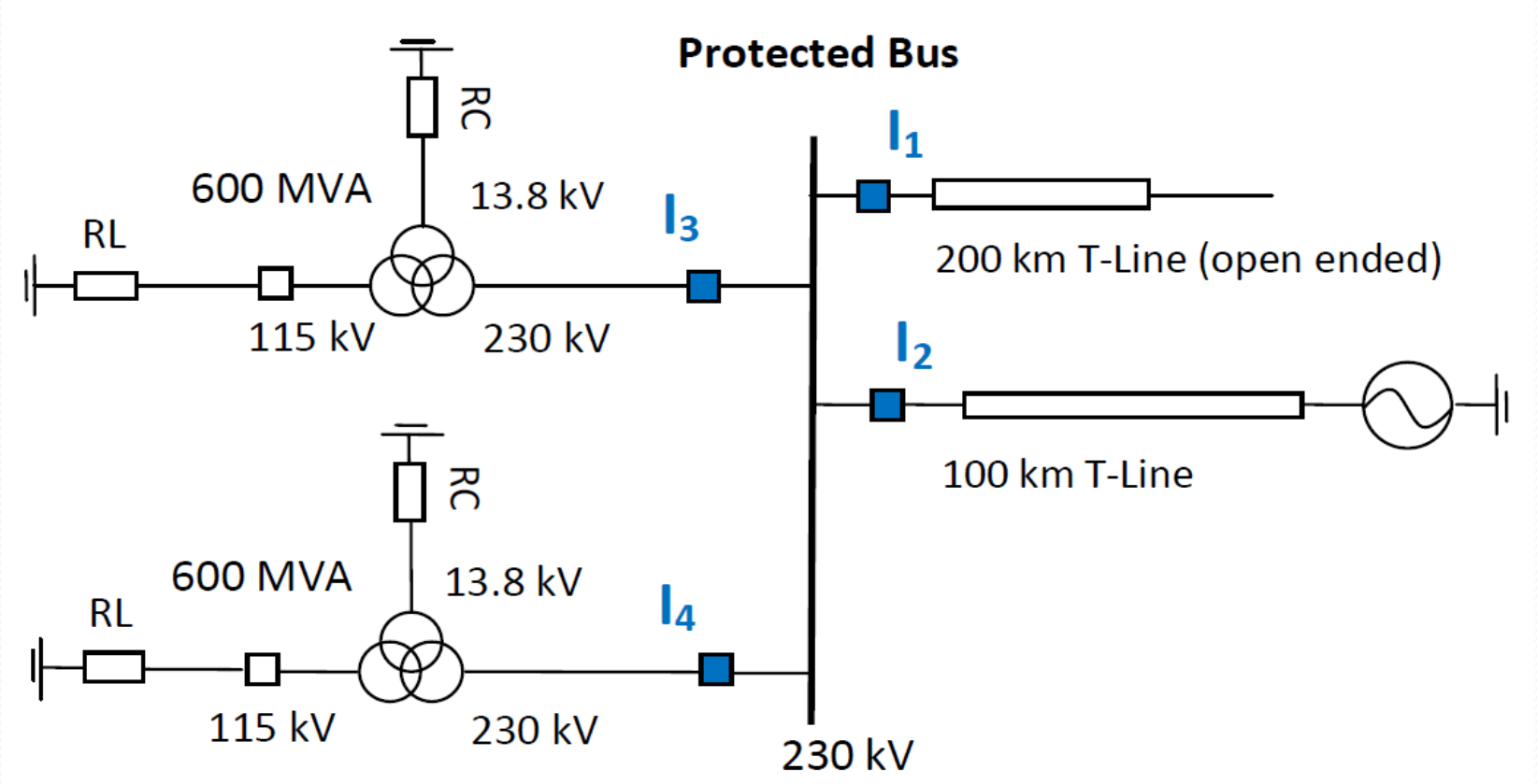

CT Saturation During External Faults

- External fault
  - Phase B-G

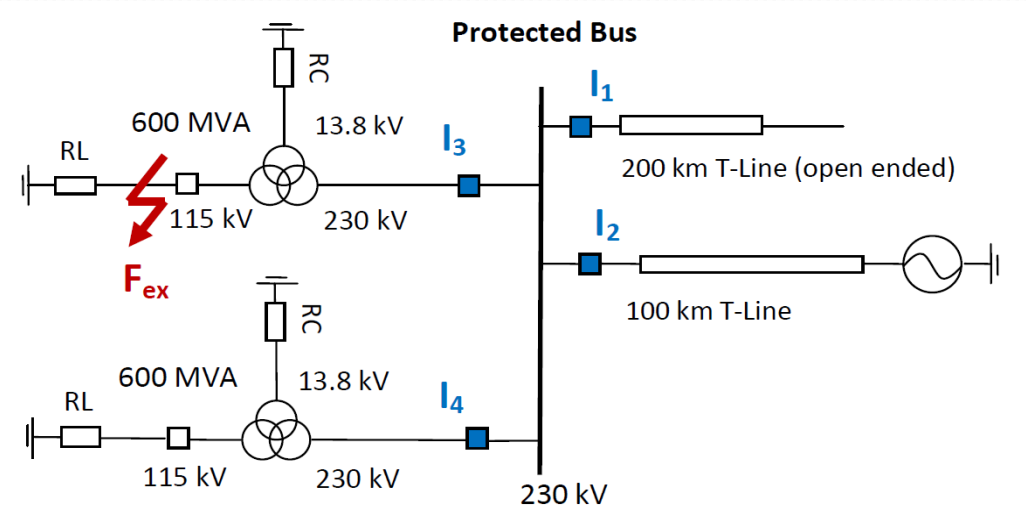

- Dual slope characteristics

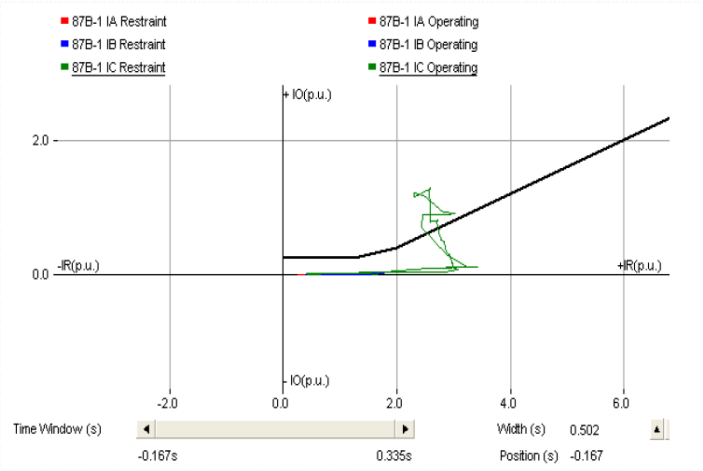

CT Saturation During External Faults cont.

- Variations of phase currents

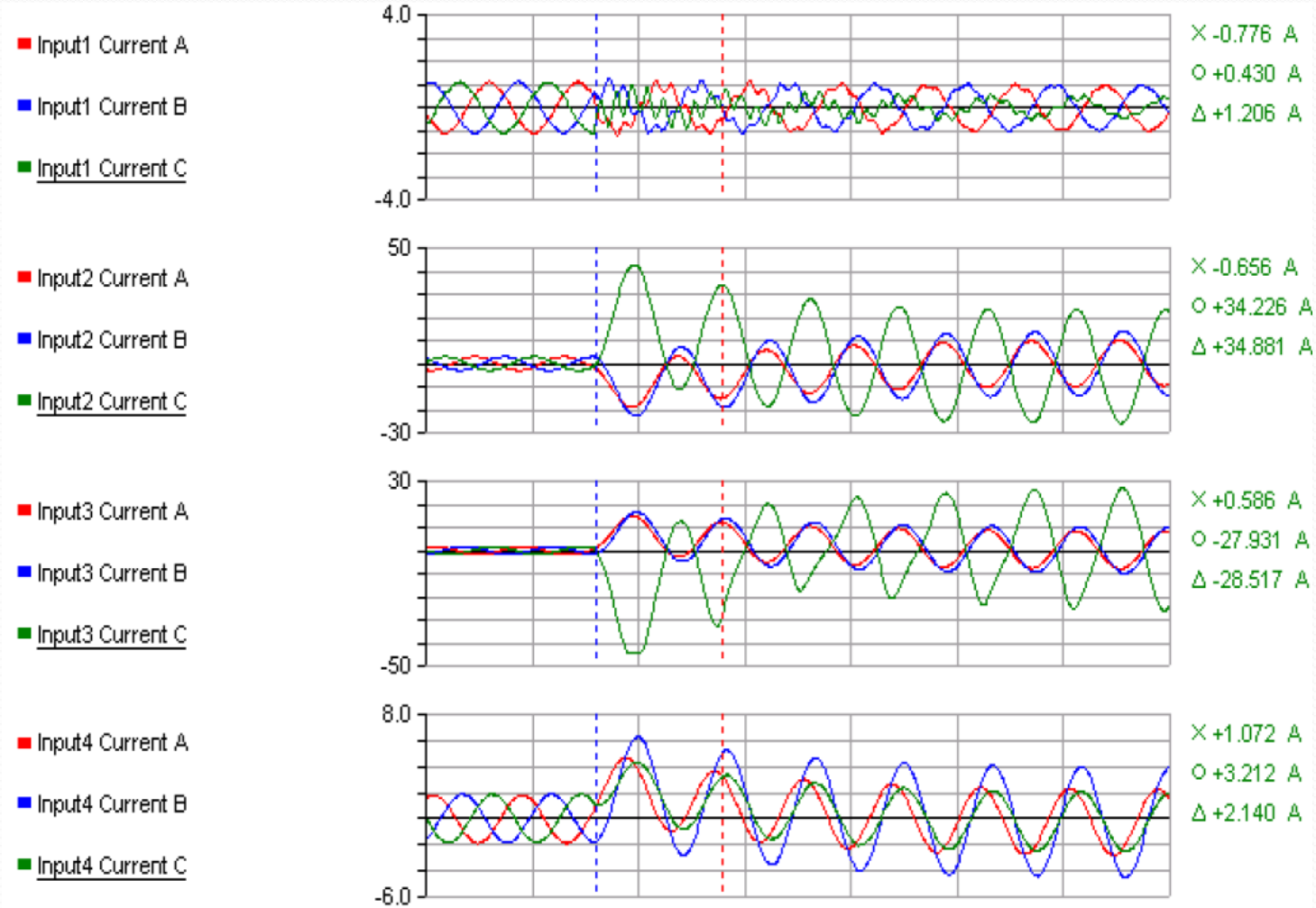

CT Saturation During External Faults cont.

- Variations of operating and restraint currents

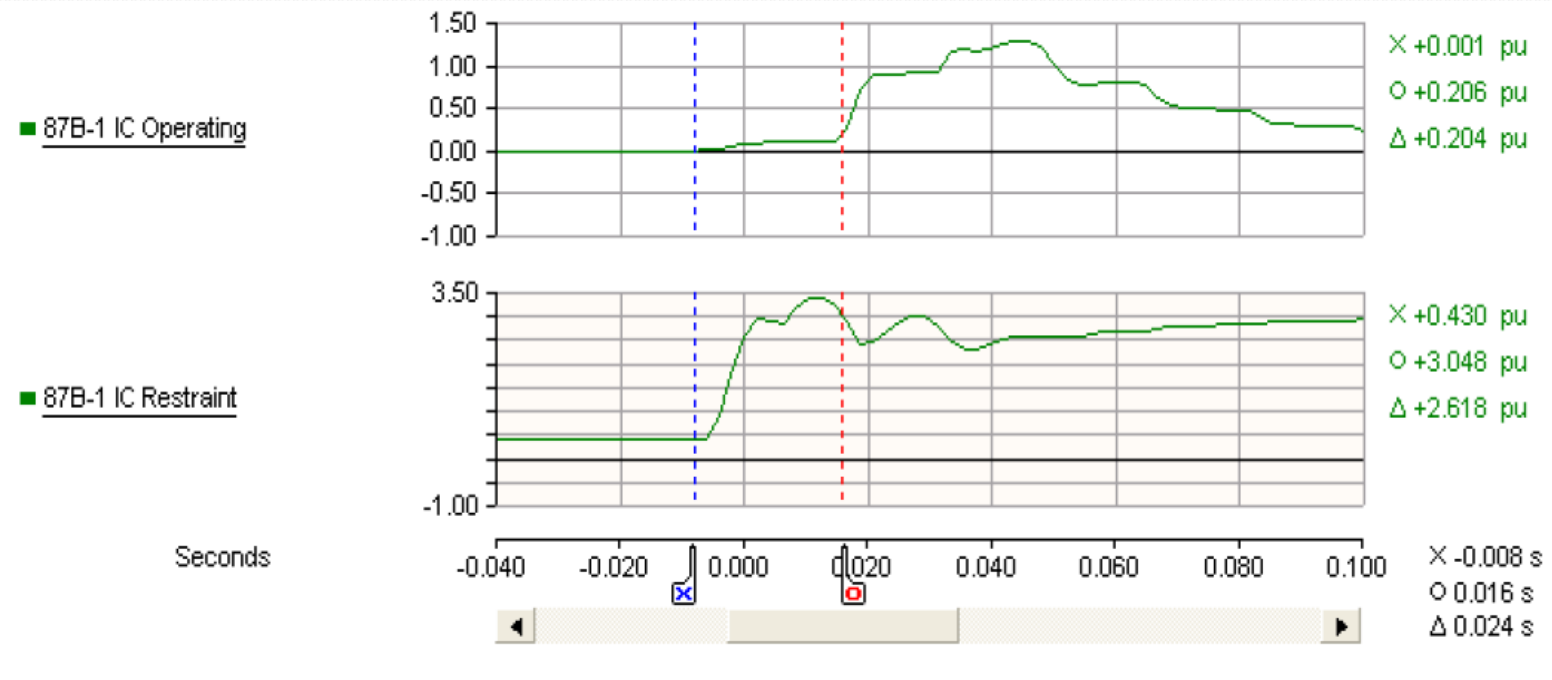

High Impedance Fault

- Internal Fault
  - Phase A-G with 200 ohms fault resistance

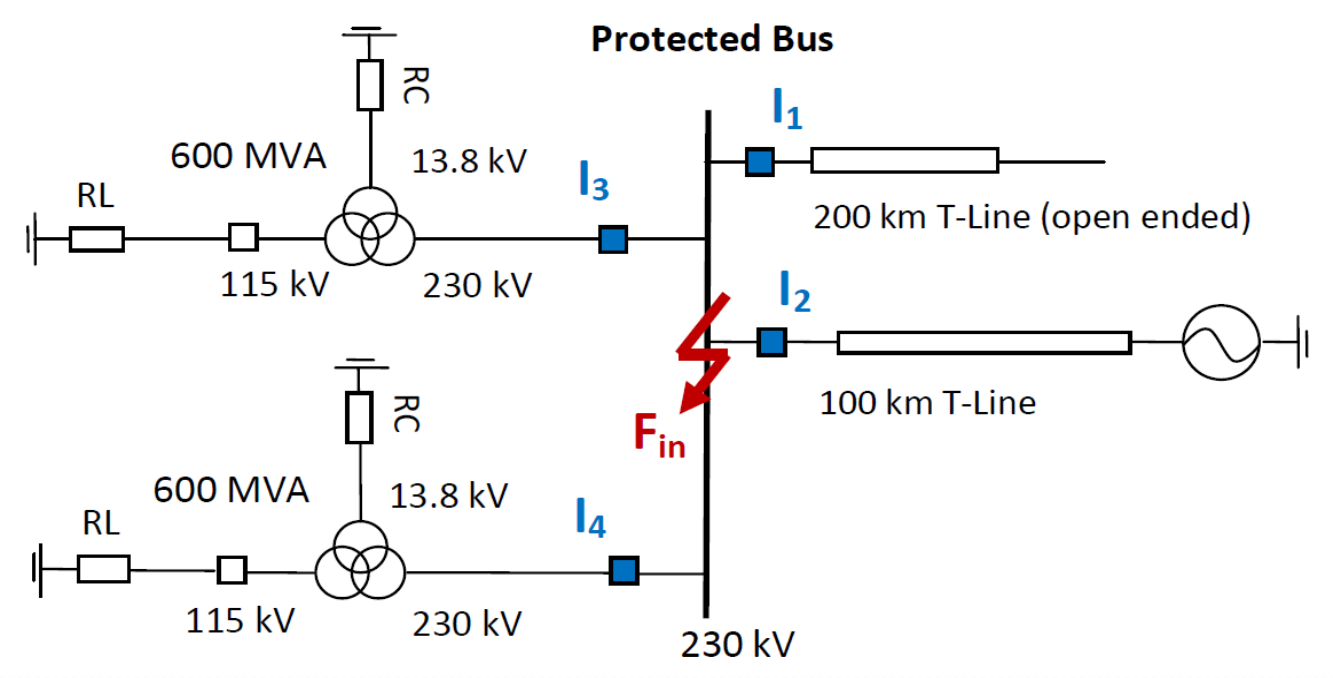

High Impedance Fault cont.

- Variations of phase currents

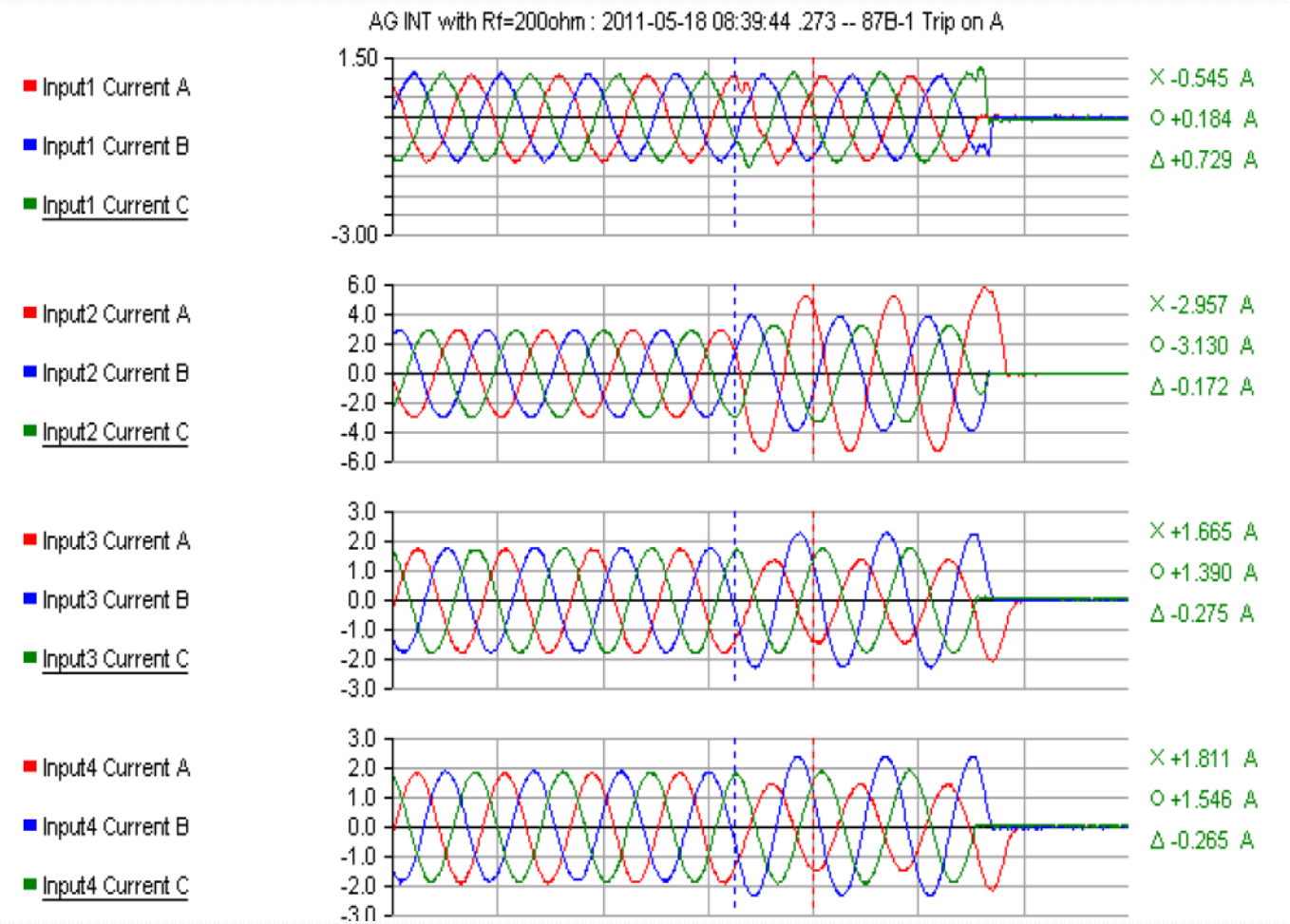

High Impedance Fault cont.

- Variations of operating and restraint currents

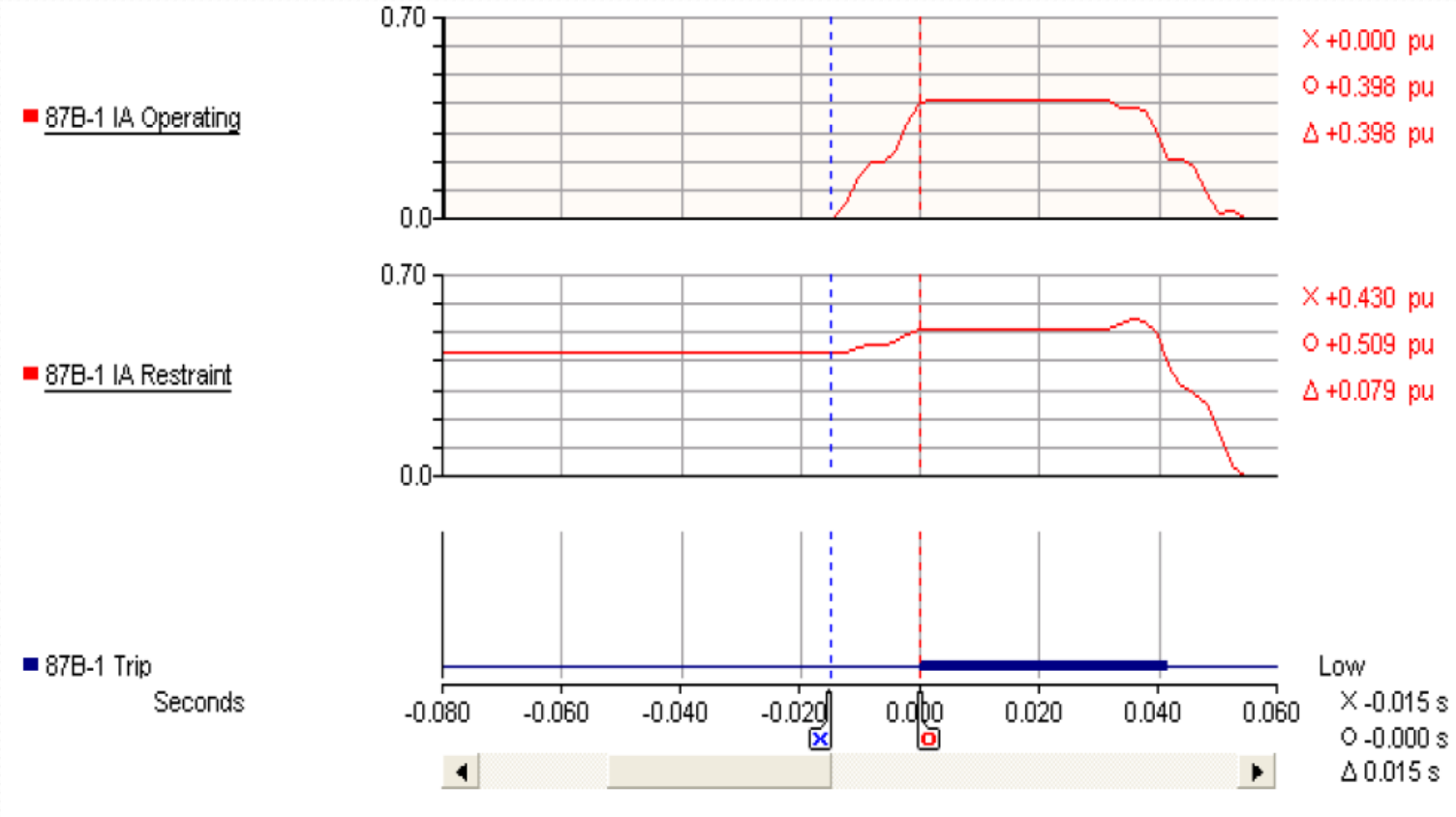

Speed of Operation with Sample Exchange

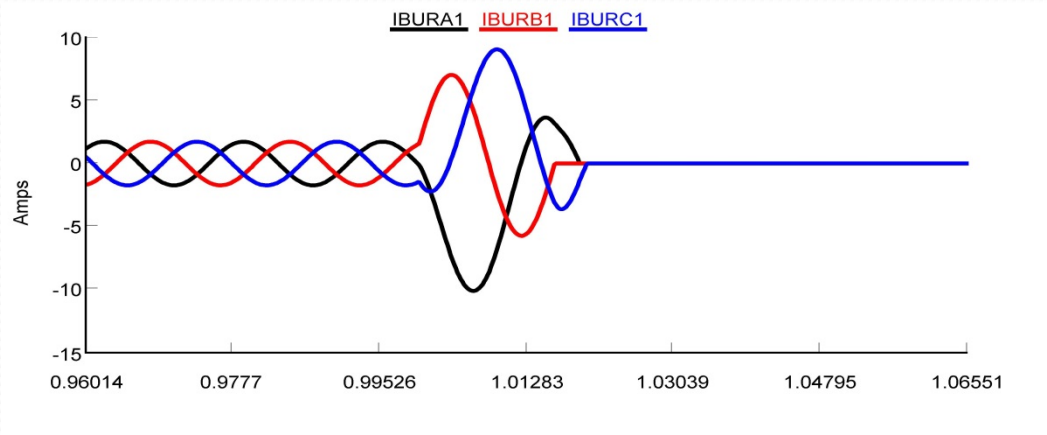

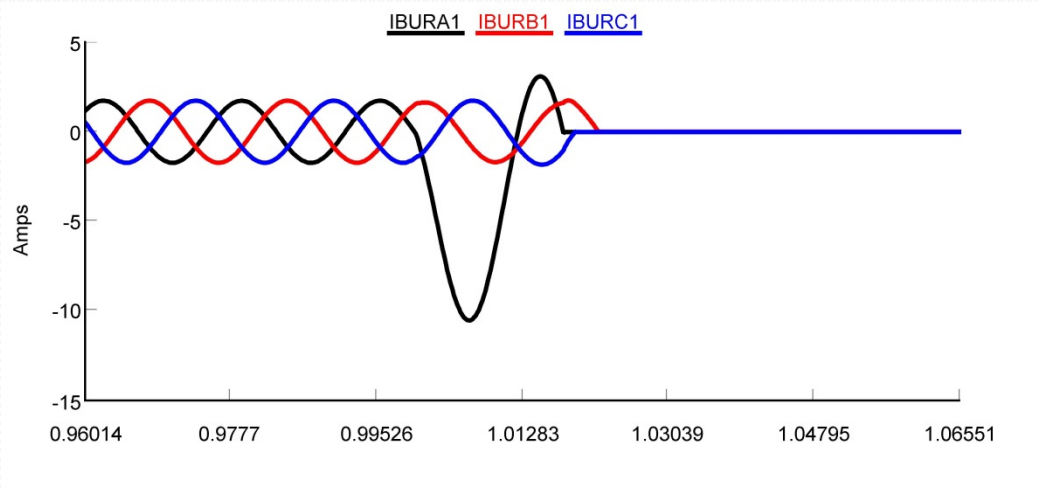

Summary

- Performance of a bus differential protection scheme was investigated using a transmission network simulated in RTDS.

- Different types of faults were simulated with different practical scenarios.
  - fast CT saturation
  - slow CT saturation
  - high fault impedances,
  - dc offset, etc..

- The results showed the capability of the proposed algorithm in detecting faults accurately.

Thank you !