# Tutorial on Networking for Digital Substations

Harsh Vardhan – GE Grid Solutions

2019 Texas A&M Protective Relaying Conference

# Agenda

- Performance requirements
- Good Practices
- Conclusion

# Digital Substation

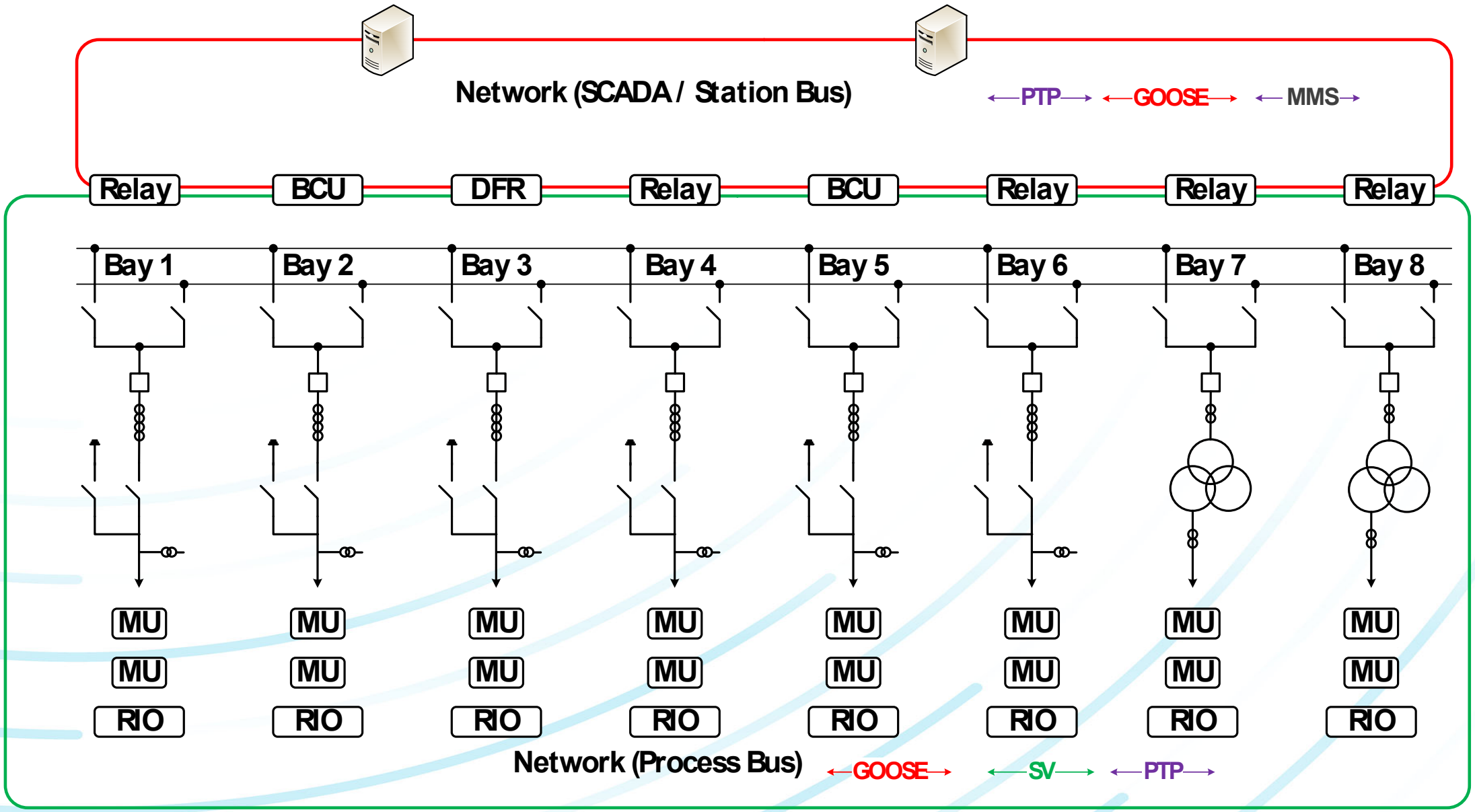

# Digital Substation messages – Bandwidth Requirements

- **GOOSE** messaging – status and control flags between devices
- **Sampled Values (SV)** messaging – instantaneous samples of current and voltage published by merging units (MUs) to other IEDs
- **IEEE 1588 (PTP)** messaging – highly accurate time synchronization over packet-based networks

| Message | Steady State | Burst |
|---|---|---|
| GOOSE | ~1 Kb/s | ~1 Mb/s |
| SV (Protection) | ~5 Mb/s (50 Hz),<br>~6 Mb/s (60 Hz) | -NA- |
| SV (Metering) | ~10 Mb/s (50 Hz),<br>~12 Mb/s (60 Hz) | -NA- |
| PTP | ~1 Kb/s | -NA- |

# Digital Substation messages – Latency Requirements

| Message | Max. Delay (ns) | Bandwidth | Application |
|---|---|---|---|
| GOOSE (Trip) | 3 | Low | Protection |
| GOOSE (other) | 10 to 100 | Low | Protection |
| Sampled Values | 4 | High | Process Bus |
| PTP | - | Low | General Phasors, SVs |
| MMS (low speed) | < 100 | Low | Control |
| MMS (med speed) | < 500 | Low | Control |

As per IEC 61850-90-4

# Selection of Network Devices

- Substation Hardened, Dual Power Supply, Watchdog contact
- Number and Type of Ethernet ports : Don't forget to include spare ports
- Port Speed, Bandwidth : Trunk Ports, Edge ports Bandwidth req might be different
- Layer 2 Functionalities: MAC, VLAN, ACL for traffic segregation
- PTP : Transparent clock (1-step or 2-step)
- Redundancy : PRP, HSR, RSTP, RedBox etc.
- Other features :
  - SNMP for monitoring
  - IGMP for PMU/ R-GOOSE application
  - L3 features
  - Cybersecurity etc.

# Good Practices

# Keep Sender-Receiver as close as possible

- Minimize Latency
- Minimize Bandwidth requirements on Trunk Ports
- Avoid Loss of packets during congestion

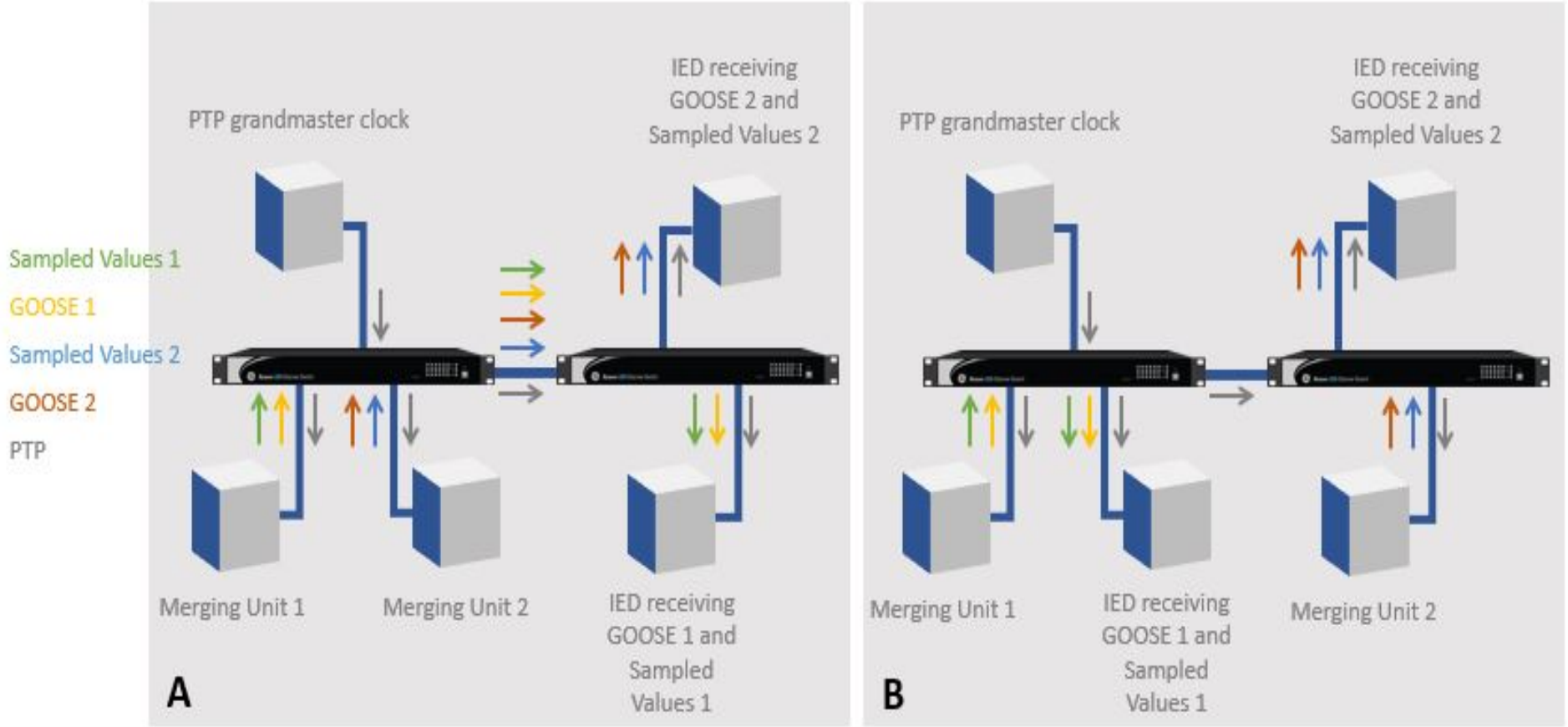

# Redundancy of Network-RSTP

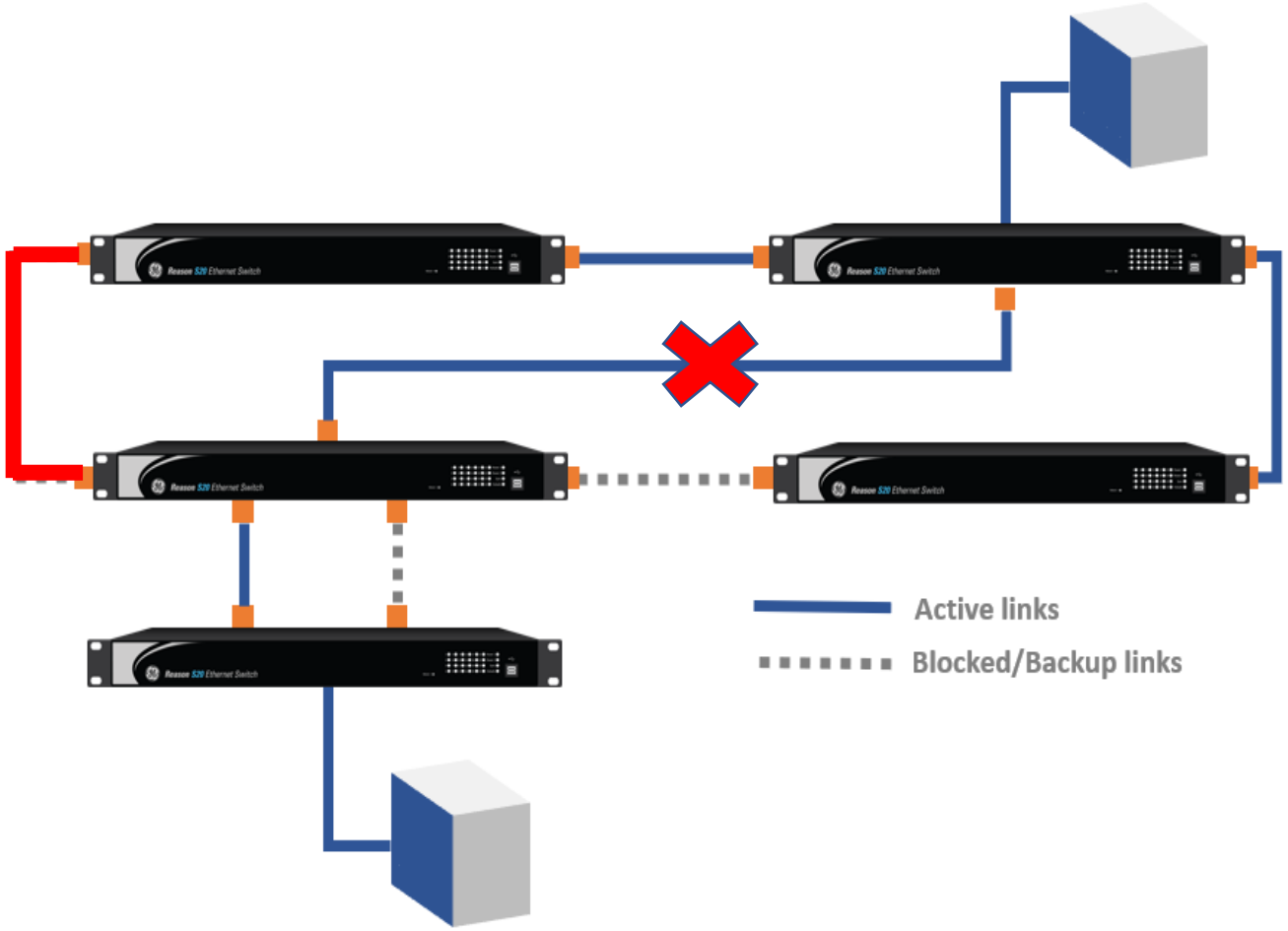

# Redundancy of Network-RRP

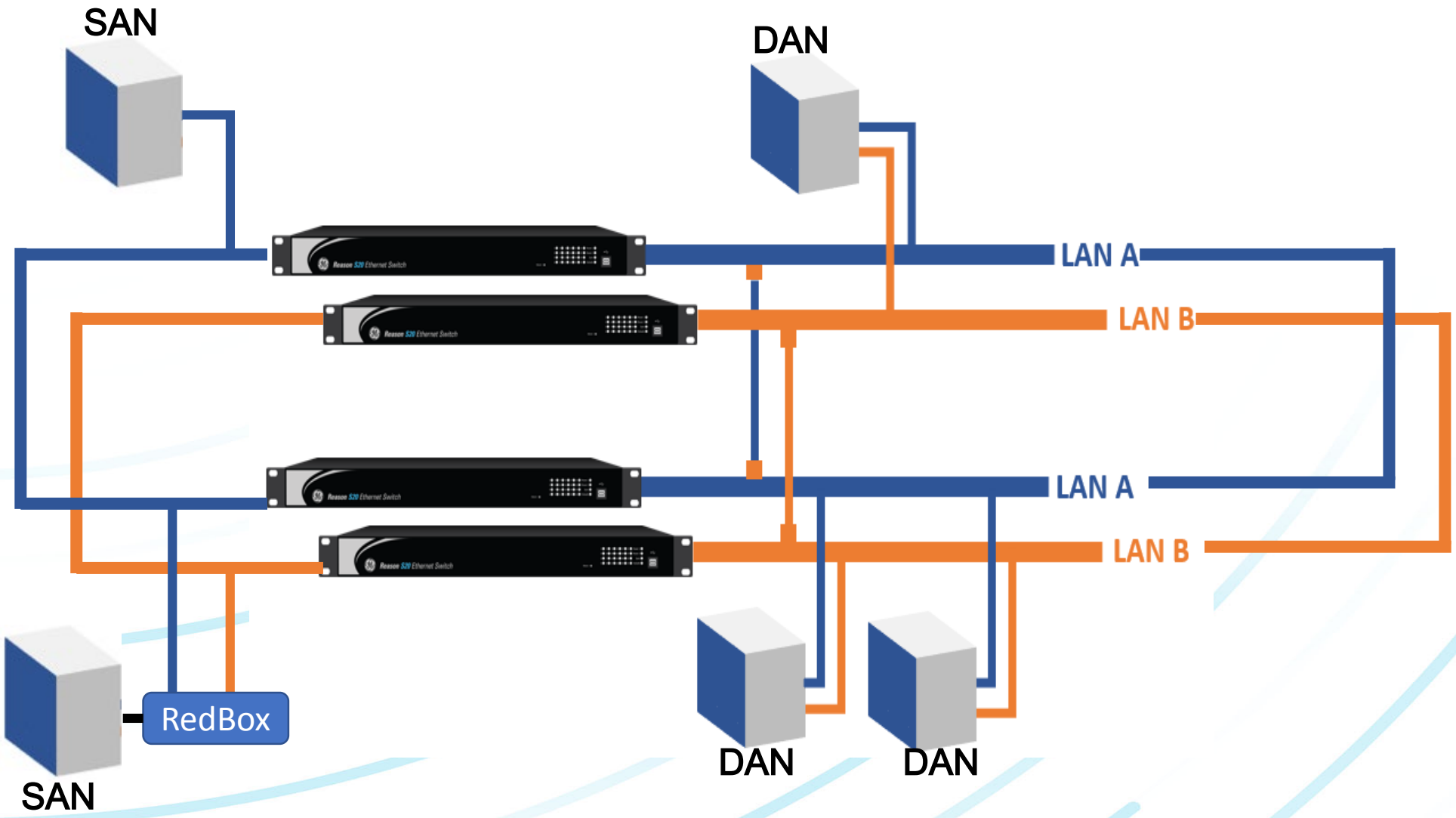

# Redundancy of Network-HSR

**Issues with Large Network**:

- Bigger the ring, bigger are the chances of having more than single failure
- All the IEDs need to support all the data flow

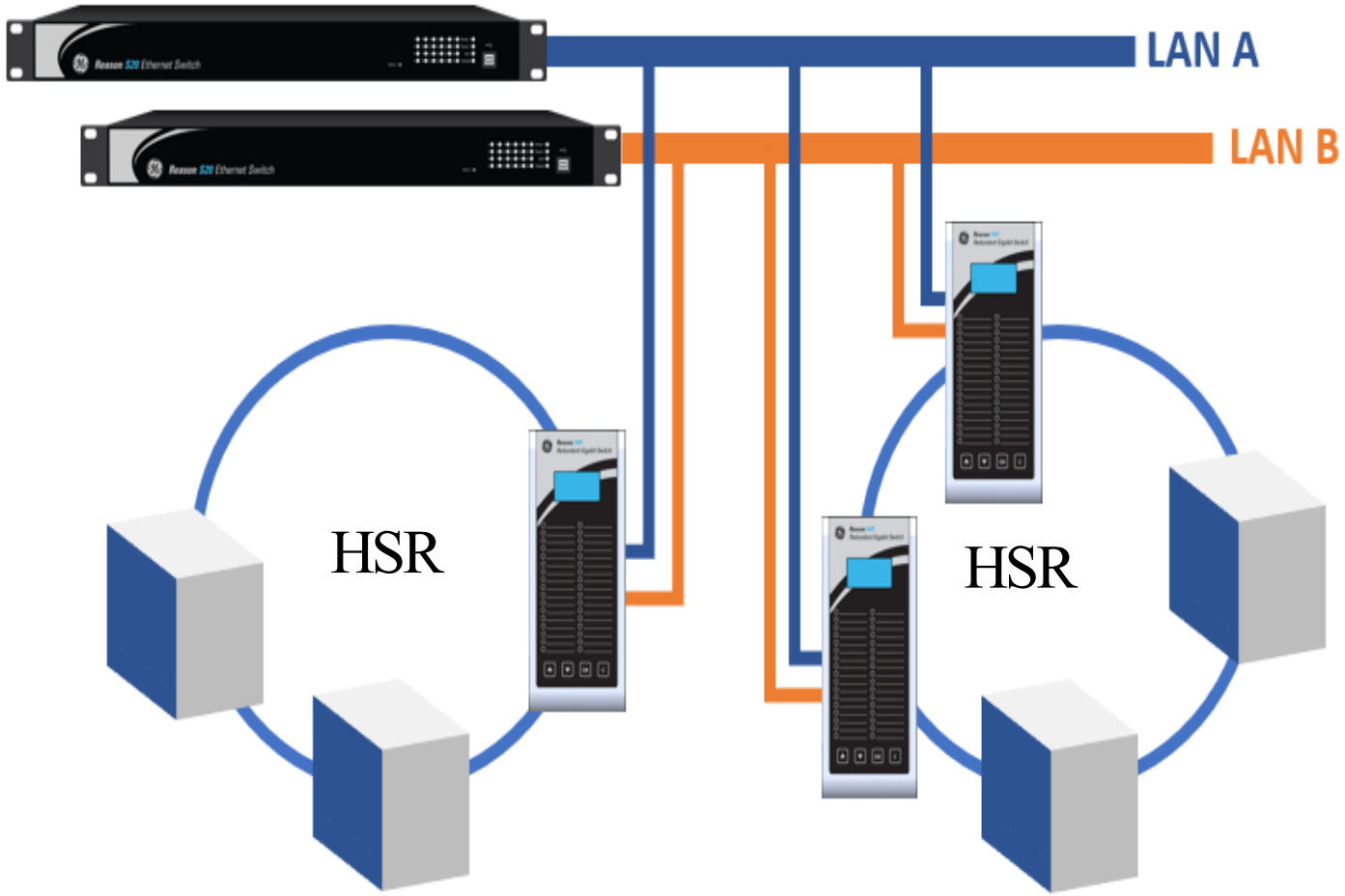

# Network Traffic Segregation – MAC Filtering

A MAC address is given to a network adapter when it is manufactured. It is hardwired or hard-coded onto your computer's network interface card (NIC) and is unique to it

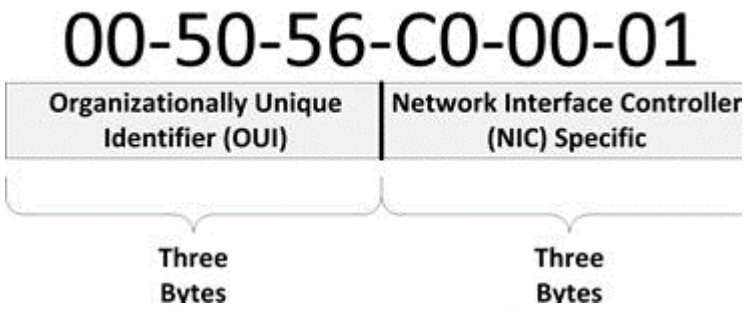


A MAC Address Table is used to define the aging time of learned MAC addresses, their mode of operation, whitelisting and blacklisting devices according to their right to access subnetworks.

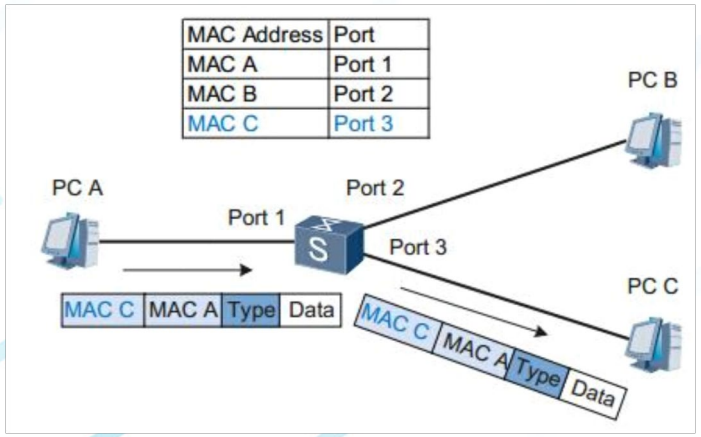

# Network Traffic Segregation – MAC Filtering

- **Static MAC Filtering**

Static MAC Table Configuration

| | | | Port Members | | | | | | | | | | | | | | |
|---|---|---|---|---|---|---|---|---|---|---|---|---|---|---|---|---|---|
| Delete | VLAN ID | MAC Address | 1 | 2 | 3 | 4 | 5 | 6 | 7 | 8 | 9 | 10 | 11 | 12 | 13 | 14 | 15 |
| Delete | 1 | 01-0C-CD-01-00-02 | ☐ | ☐ | ☐ | ☐ | ☐ | ☐ | ☐ | ☑ | ☐ | ☐ | ☐ | ☐ | ☐ | ☐ | ☐ |

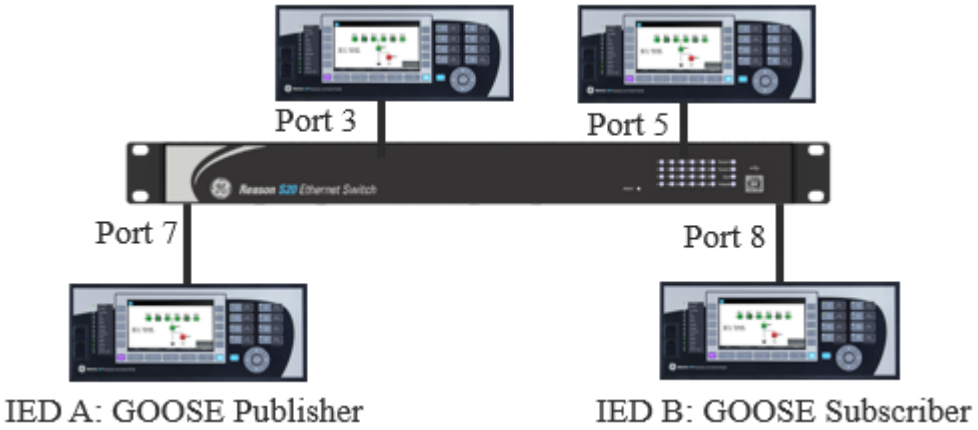


| SETTING | PARAMETER |
|---|---|
| TxGOOSE1 MODE | GOOSE |
| TxGOOSE1 GoCB name | L90_GoCB01 |
| TxGOOSE1 GoID | L90_TxGOOSE1 |
| TxGOOSE1 DatSet | TT6DataSet1 |
| TxGOOSE1 DST MAC | 01-0C-CD-01-00-02 |
| TxGOOSE1 VLAN PRIORITY | 4 |
| TxGOOSE1 VLAN ID | 2 |

IED A: GOOSE Publishing Parameters

- **Dynamic MAC Filtering** using GMRP etc.

# Network Traffic Segregation – VLAN

Virtual LAN technology allows logical separation of the physical network.

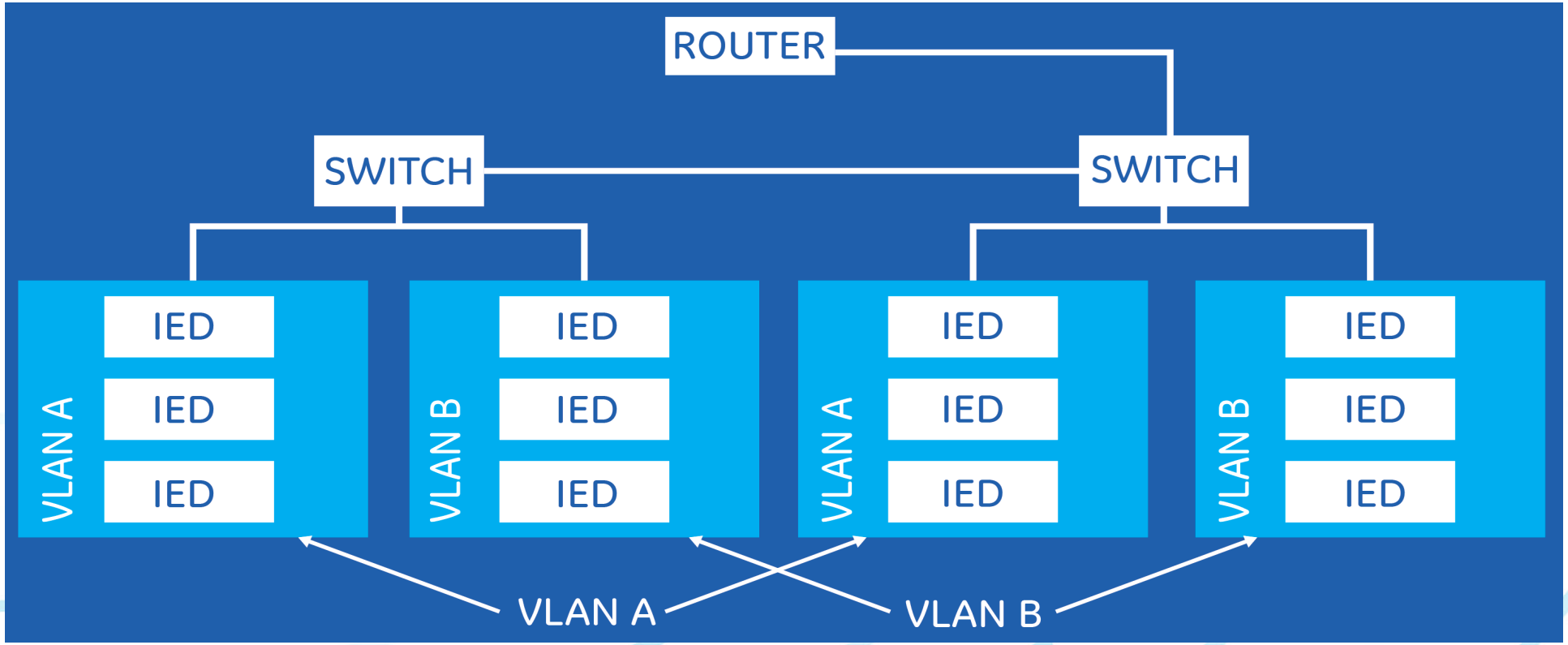

# Network Traffic Segregation – VLAN

| Delete | VLAN ID | VLAN Name | Port Members 1 | 2 | 3 | 4 | 5 | 6 | 7 | 8 | 9 | 10 | 11 | 12 |
|---|---|---|---|---|---|---|---|---|---|---|---|---|---|---|
| ☐ | 1 | default | ✓ | ✓ | ✓ | ✓ | ✓ | ✓ | ✓ | ✓ | ✓ | ✓ | ✓ | ✓ |
| ☐ | 2 | GOOSE2 | | | | | | | ✓ | ✓ | | | | |

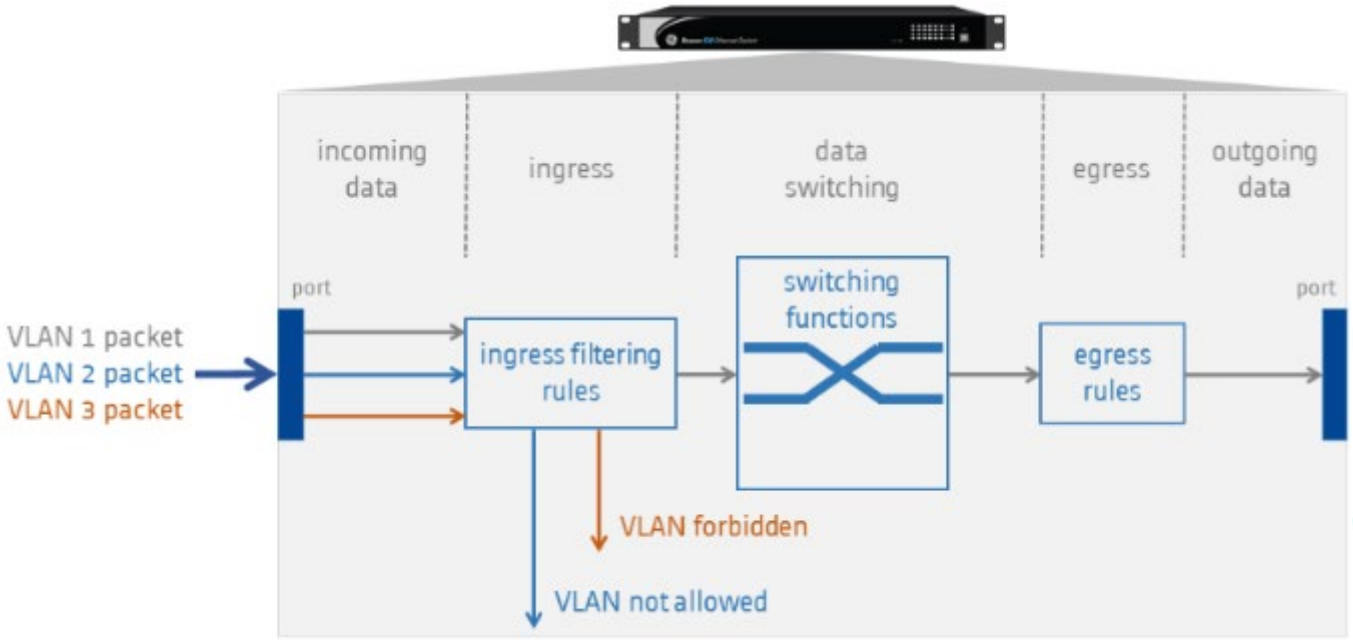


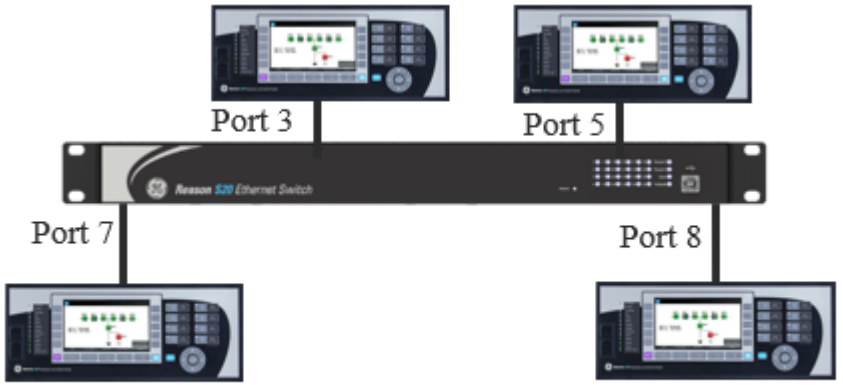


IED A: GOOSE Publisher

IED B: GOOSE Subscriber

| SETTING | PARAMETER |
|---|---|
| TxGOOSE1 MODE | GOOSE |
| TxGOOSE1 GoCB name | L90_GoCB01 |
| TxGOOSE1 GoID | L90_TxGOOSE1 |
| TxGOOSE1 DatSet | TT6DataSet1 |
| TxGOOSE1 DST MAC | 01-0C-CD-01-00-02 |
| TxGOOSE1 VLAN PRIORITY | 4 |
| TxGOOSE1 VLAN ID | 2 |

IED A: GOOSE Publishing Parameters

# Access Control Lists

- Block or allow whole types of traffic based on EtherType
  - Can explicitly block or allow GOOSE, SV, PTP on any ports
  - Deny all other traffic by default

| Ingress Port | Policy / Bitmask | Frame Type | Action | Rate Limiter | Port Redirect |
|---|---|---|---|---|---|
| All | Any | EType- 0x88ba | Deny | Disabled | Disabled |

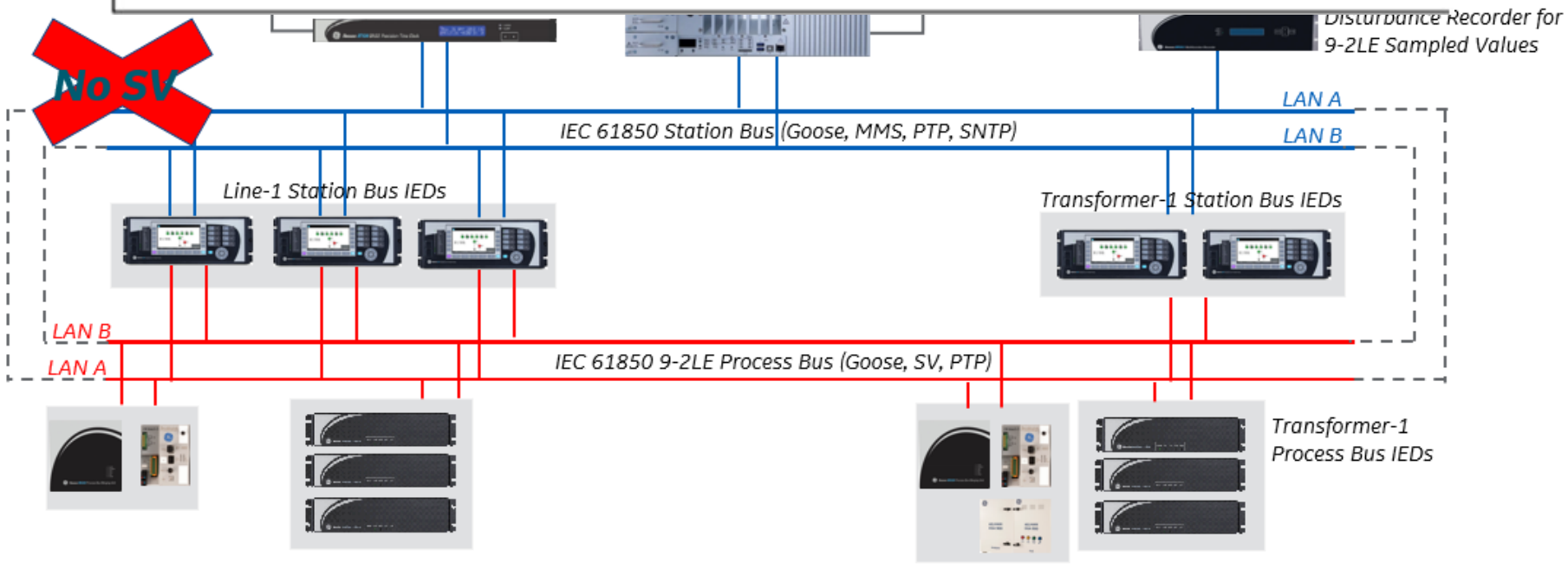

# Quality of Service (QoS) – Prioritizing Traffic

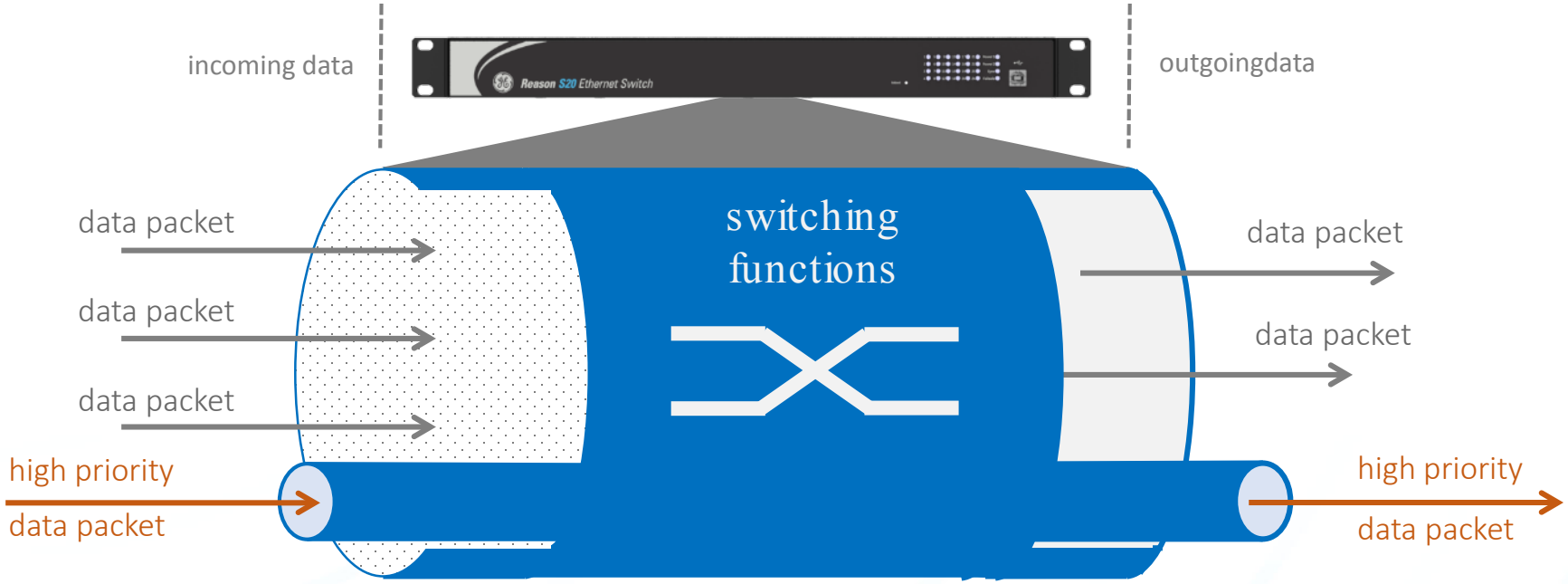


| Message | Priority in network | QoS |
|---|---|---|
| PTP | Medium | 4 |
| Sampled Values | Medium | 4 |
| GOOSE (control) | High | 5 |
| GOOSE (trip) | Highest | 6 |
| MMS and TCP/IP comms | Low | 0 |

# Network FAT

- What a FAT is:
  - Off-site commissioning of the substation network
  - Performed with software simulators / test equipment
  - Tested in a controlled scenario

- What a FAT does:
  - Reduce commissioning time
  - Reduces installation time
  - On-site work is verifying communications cable connections

# Summary

- Our substation networks don't change frequently
  - Traffic flows are consistent and predictable
  - Network requirements only change with capital projects

- Simple, standard networking tools cover our needs
  - Link speed to provide bandwidth
  - Traffic shaping through VLANs, MAC address filtering, Access Control Lists
  - QoS, traffic shaping to address latency
  - Network topology (RSTP, PRP, HSR) provides reliability

- First step is good project engineering

# Thank You

# Questions?