Mitigating Carrier Holes in Power Line Carrier

Texas A&M Protective Relaying Conference 2019

Carrier Holes – What are they?

- Carrier holes is the name given to the loss of power line carrier signal when it should be present.
- They are usually associated with miss-operations due to the lack of receive carrier signal during a fault.
- They do not occur very often, but when they do they are a “pain”.

Carrier Holes – Why Do We Care?

- Carrier holes can cause the Protective Relay system to miss-operate depending on how long they last.
- Unexplained miss-operations due to carrier holes require much time/resources to be spent in investigation and troubleshooting.
- In what ways can carrier holes cause miss-operations:
  1. In DCB ON-OFF systems during an external fault when blocking carrier needs to be sent, loss of carrier signal will cause an over-trip.
  2. In DTT & POTT FSK systems during an internal fault, a Trip will be delayed or will not get through.
  3. In an unblock DCUB FSK system a loss of carrier signal can cause a false Trip permission output window that can result in an over-trip if caused by an external fault.

Carrier Holes – Possible Causes

- Spark gaps firing
- Coax cable flashover from center to outer conductor
- Contact bounce with EM protective relays
- Incorrect settings or calibration of Power Line Carrier receivers.

Carrier Holes – Mitigation Methods

- Spark gaps – Maintain or replace them.
- Coax cable – Megger, checking for high voltage flashover. Replace deteriorated coax cable. Use better types of coax.
- Contact bounce – Use normally closed contacts that open to key the carrier, or use digital protective relays.
- Incorrect RX settings or calibration – Double check settings/cal & train personnel.

Carrier Holes – Mitigation Methods

- Special Settings – To “ride through” a carrier hole.
  - DCB systems: Can add received blocking extension (hold) timers to protective relay or carrier unit.
  - DCUB systems: Can delay trip permission window in the carrier unit to wait until a spark gap clears or whatever caused the carrier hole.

Carrier Holes – Unexplained Ones

- Normal testing of the protective relaying and power line carrier system shows no problems.
- **What now??**

Carrier Holes – A Dominant Cause

- When a line to ground fault occurs there is normally a transient at the beginning of the fault that usually causes spark gaps to fire.
- How long does it take the spark gap to clear?
- **Tests showed a surprise**. The spark gaps could take extended times of 2-20 msec to clear.

Location of Spark Gaps

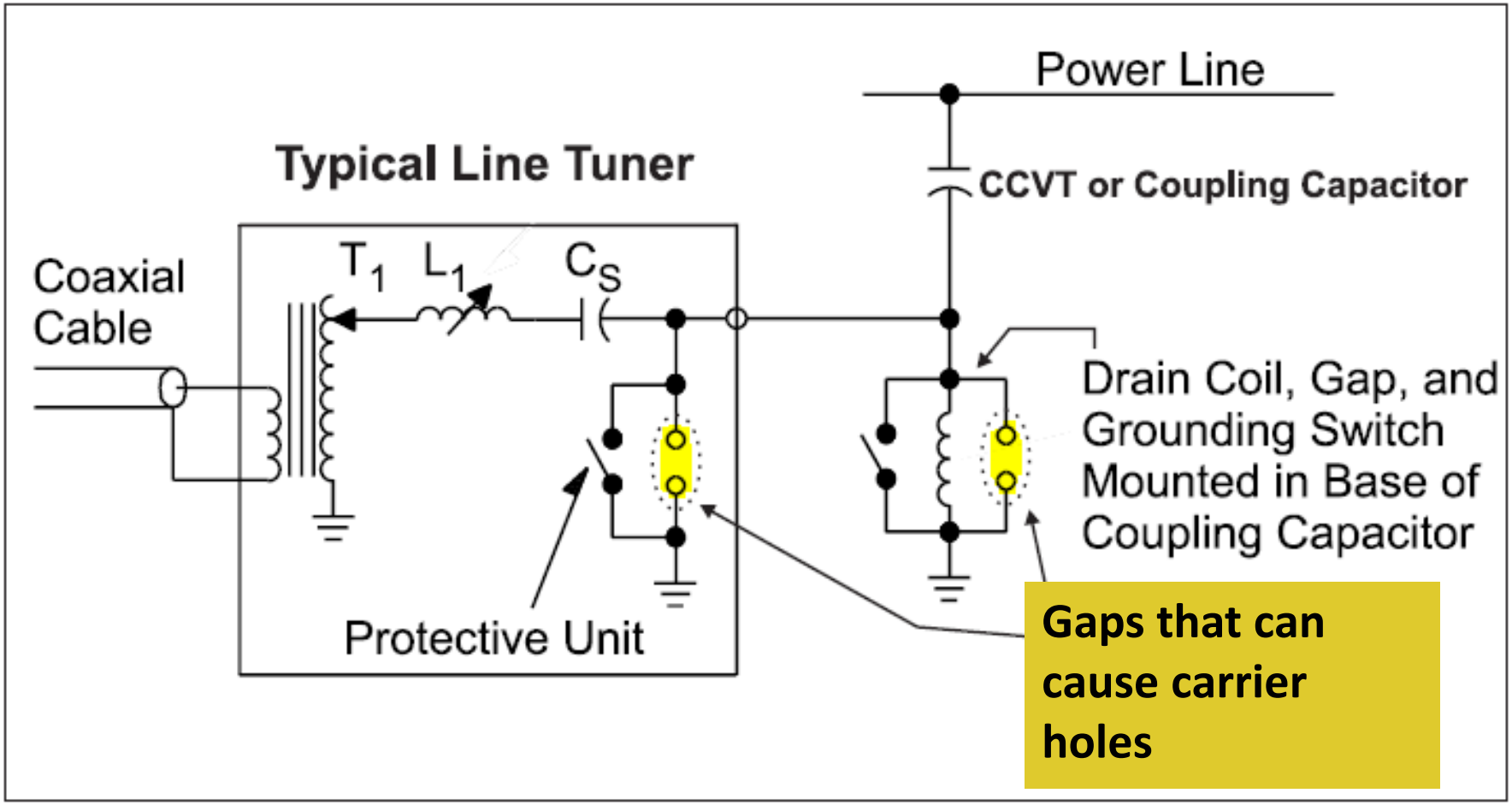

Spark Gap Study

Researching the internet and talking with surge protection experts revealed a surprise.

- **Gas discharge tubes (GDTs)** fire at a much higher voltage than is required to keep them firing. (Typical GDT fires at 5 kV but can keep firing at less than 180V across it.) This is called their holding voltage (or glow voltage).
- What can keep them firing/holding on?
  1. The PLC Transmitter RF power signal (10W – 100W)
  2. The residual 60 Hz voltage across the drain coil that makes it through the CCVT. (30Vrms max by CCVT standard)
- **Air gaps** don't have this issue of having a holding voltage lower than their firing voltage.

Present Spark Gaps in Tuners & CCVTs

Gas Discharge Tubes - Advantages

- Being used on many line tuners & CCVTs as they are more precise and sealed therefore not being exposed to contamination and do not require setting.

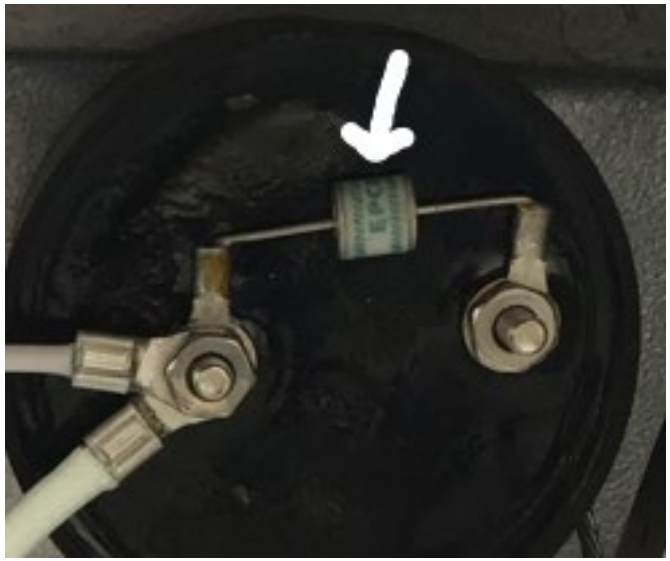

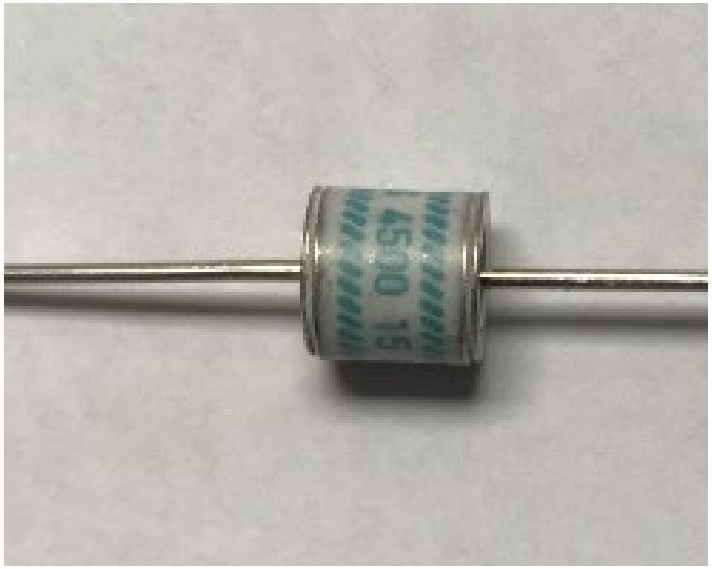

Present Spark Gaps in Tuners & CCVTs

Gas Discharge Tubes – Disadvantages

- Have the holding voltage phenomenon and tend to have slower clearing times.
- More difficult to tell if damaged due to ceramic enclosure. May need to shine high power light through them to clearly see if darkened.
- When they start to fail the inside of the gas tube will first have dark spots and then completely blackens with time.
- Failed 8mm gas tube → that has been broken to reveal inside discoloration.

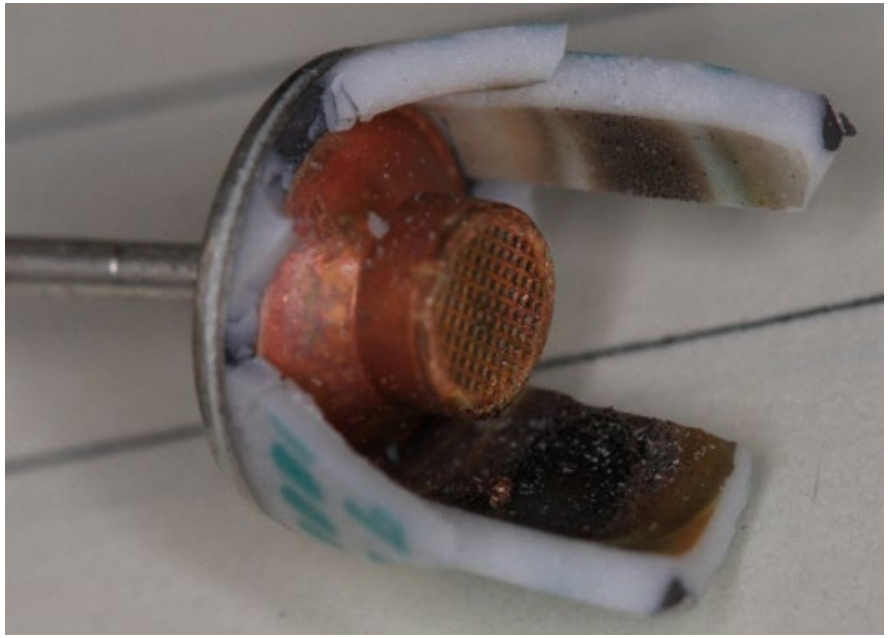

Present Spark Gaps in Tuners & CCVTs

Air Gaps - Advantages

- Still popular due to being able to physically see and clean the gap.
- They extinguish arcs faster than gas tubes when in good condition.
- There are various types ranging from simple metal washers spaced apart to more sophisticated types.
- White arrow shows the thin gap. →

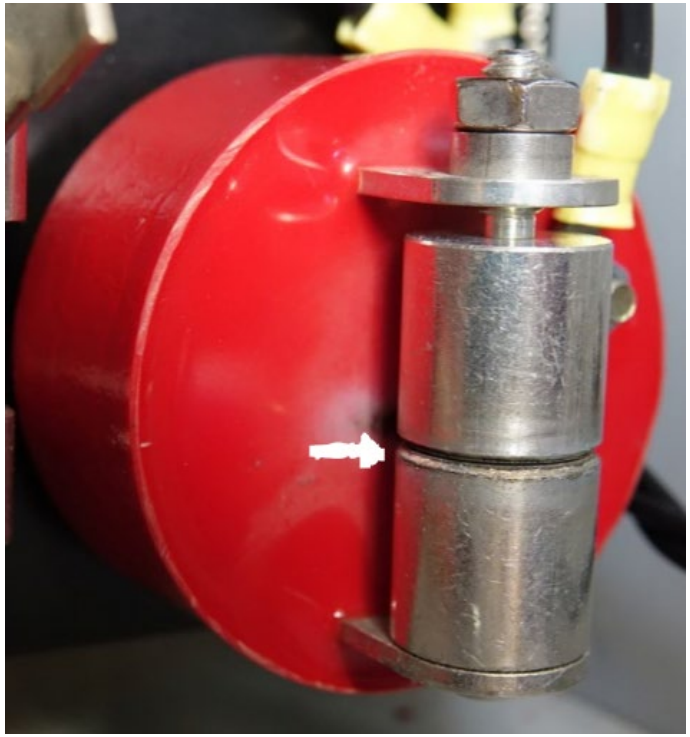

Present Spark Gaps in Tuners & CCVTs

Air Gaps - Disadvantages

- Get worse with time from carbon build up and pitting that occur during arcing, humidity/moisture/dust, oxidation, & insects. They can also be misadjusted.

- Photo shows corrosion and non-parallel surfaces of a poorly maintained air gap.

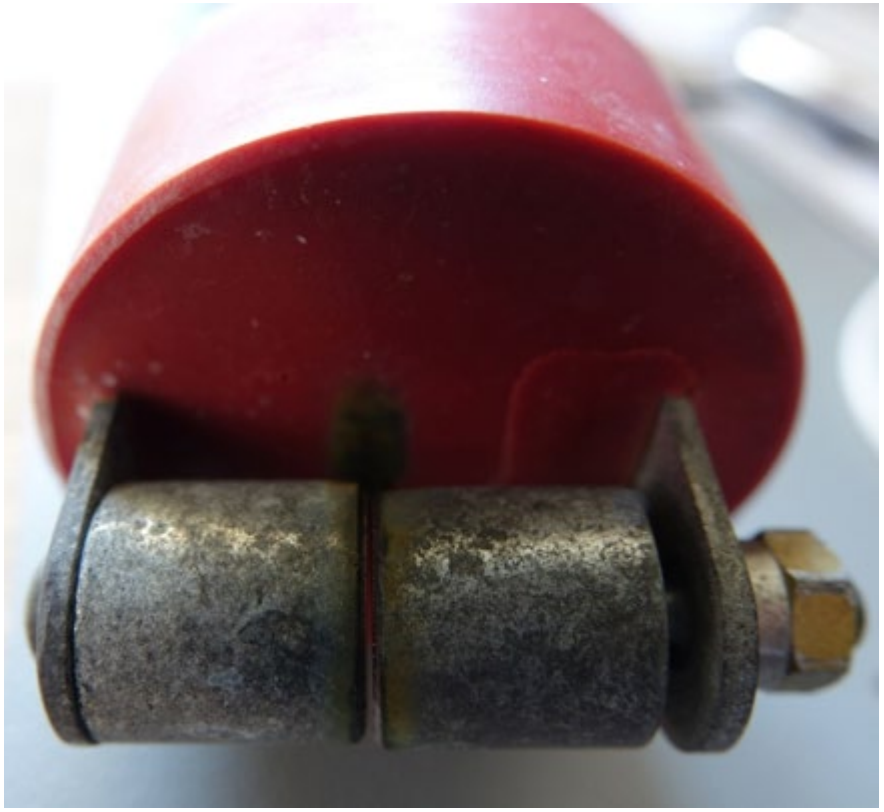

Lab Testing - Spark Gap Setup

- Real world can only be approximated using single pulse surge generator (1.2 x 50 μsec pulse) & dummy power line/CCVT. All other items were actual typical equipment. Carrier unit set to continuously transmit and to receive.
- Recording scope triggered on surge current going through line tuner gap with other scope input measuring hi-speed receiver output. SOEs in PLC also checked.
- **3 variables**: Type of spark gap, transmitter power and 60 Hz residual power coming through CCVT.
- Worst case condition was applying TX power = 100W and 60 Hz voltage = 30V.
- Tens of thousands of surges were applied, 1 at a time, with any loss of carrier > 2msec being counted as a carrier hole.

Lab Test Setup

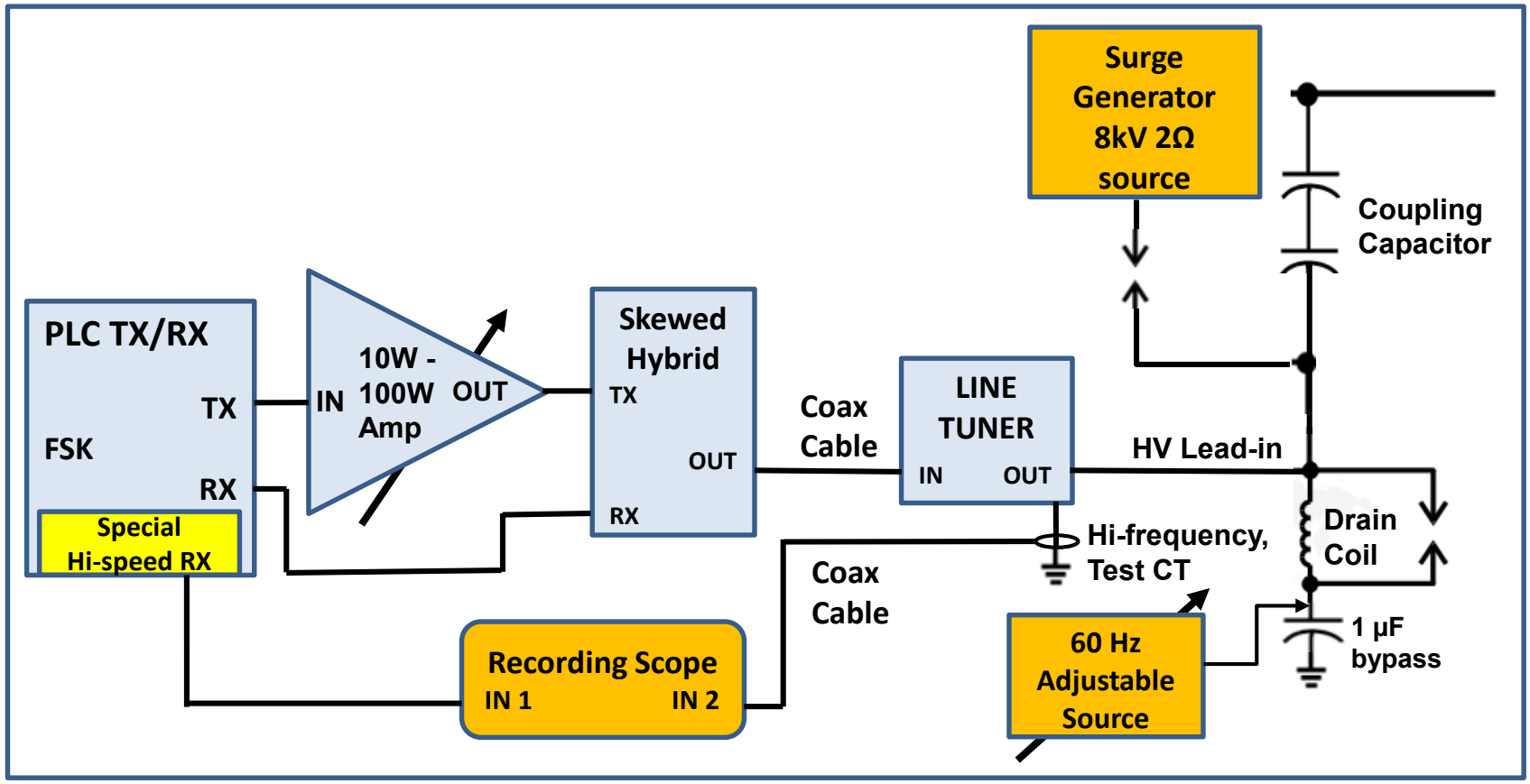

Lab Testing - Spark Gap Results

- **Air gap in line tuner** – Carrier holes were only produced with the a “compromised” gap (set wrongly, damaged, or dirty). Otherwise no carrier holes under any conditions.
- **Normal Gas discharge tube gap (GDT) in line tuner** – Under worst case conditions there were carrier holes occurring 50% of the time.
- **Special High-holding voltage GDTs** in line tuner – No carrier holes ever occurred under any conditions.
- Reducing the RF from the PLC transmitter and the 60 Hz voltage across the CCVT drain coil reduced the % of carrier holes but did not stop them.
- When carrier holes occurred they lasted from 2 – 20 msec with the majority over 8 msec long.

Field Testing - Spark Gap Setup

- A crank disconnect switch was manually opened and shut to create transients close to where the CCVT and our setup was located at one end of the line.
- Recording scope triggered on surge current going through line tuner gap with other scope input measuring hi-speed receiver output. SOEs in PLC also checked.
- **2 variables**: Type of spark gap and transmitter power (60 Hz residual power coming through CCVT was <10V).
- Worst case condition was applying TX power = 100W with GDT gap.
- Disconnect switch was opened/closed over 20 times.

Field Test Setup

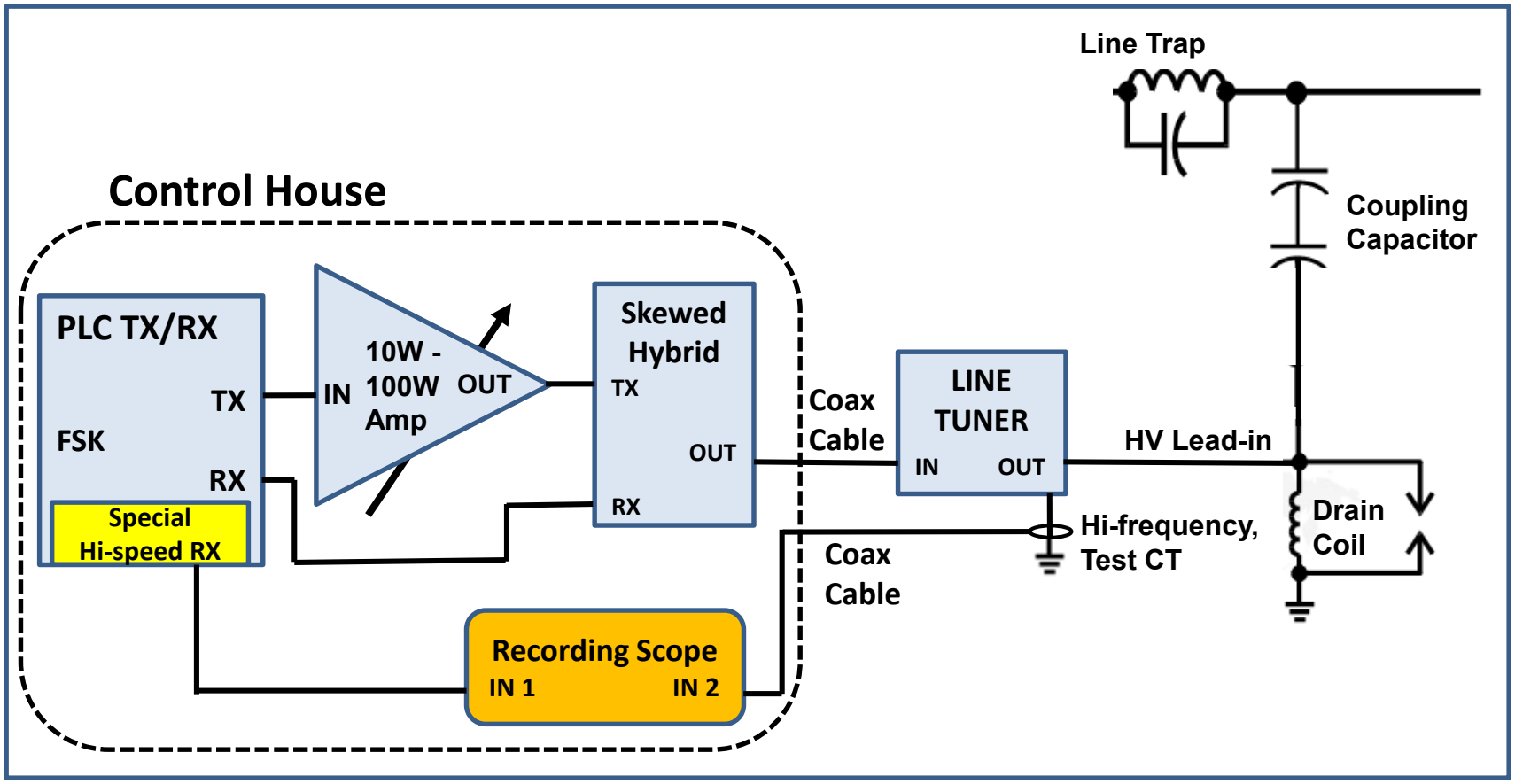

Field Testing - Spark Gap Results

- The disconnect switch opening or closing created about a 2 second long volley of closely-spaced-in-time surges.
- The SOEs in the carrier set showed loss of receive signal ranging from 3 – 13 msec when the normal GDT was in the line tuner or CCVT. Hi-speed RX output monitored by scope was in agreement.
- **All gaps in line tuner and CCVT** – Had to be either properly set air gaps in good condition or special high-holding voltage GDTs to prevent any carrier holes.
- Reducing the RF from the PLC transmitter reduced the % of carrier holes occurring.

Field Test Results with Normal GDT

Tuner gap current

RX level

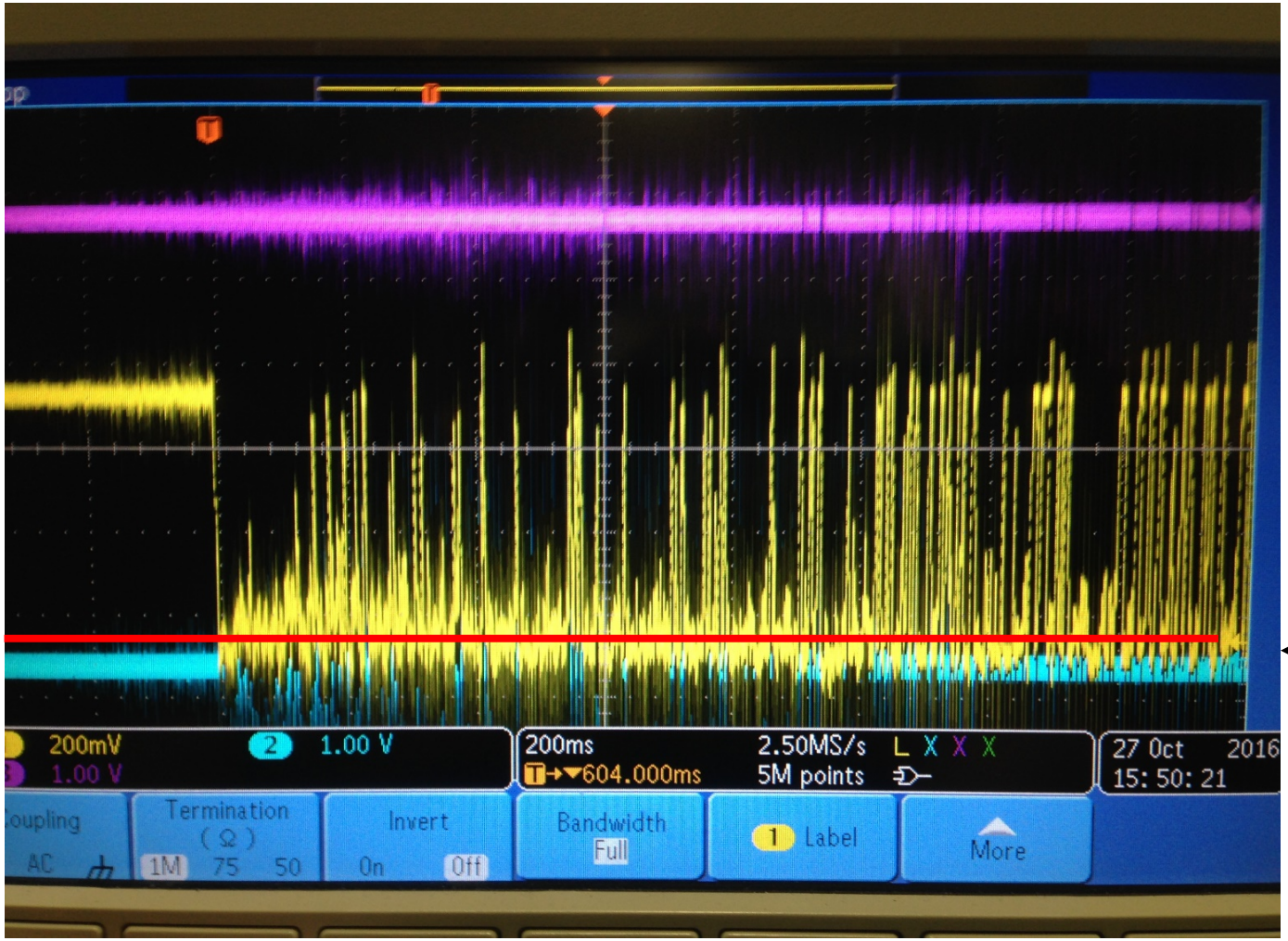

RX level

RX Drop-Out level

Field Test Results with Hi-Holding voltage GDT

CCVT gap current

RX level

Tuner gap current

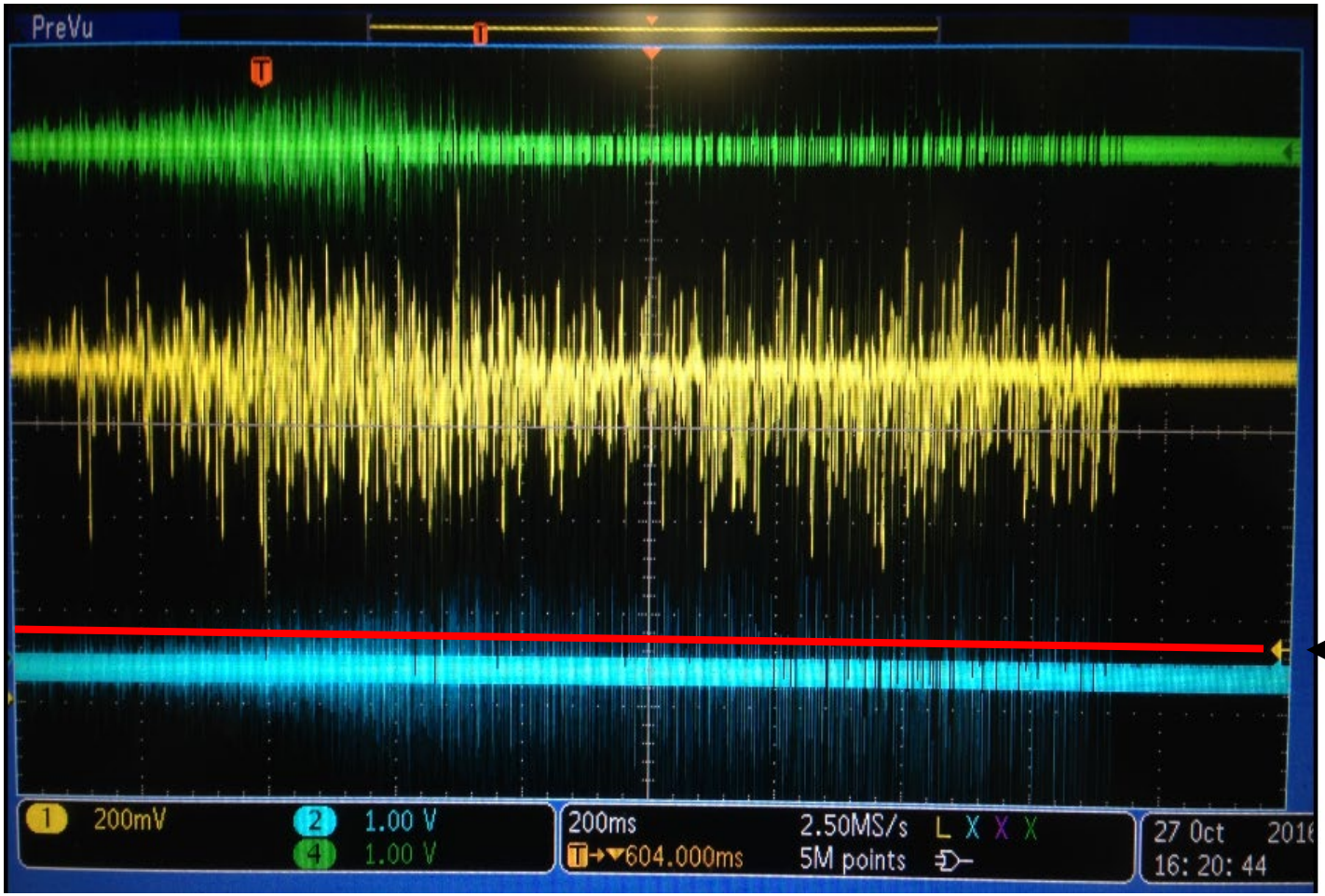

RX level

RX Drop-Out level

Questions

???