Protection Basics 101

What Are We Protecting?


Lightning Strikes Create Faults

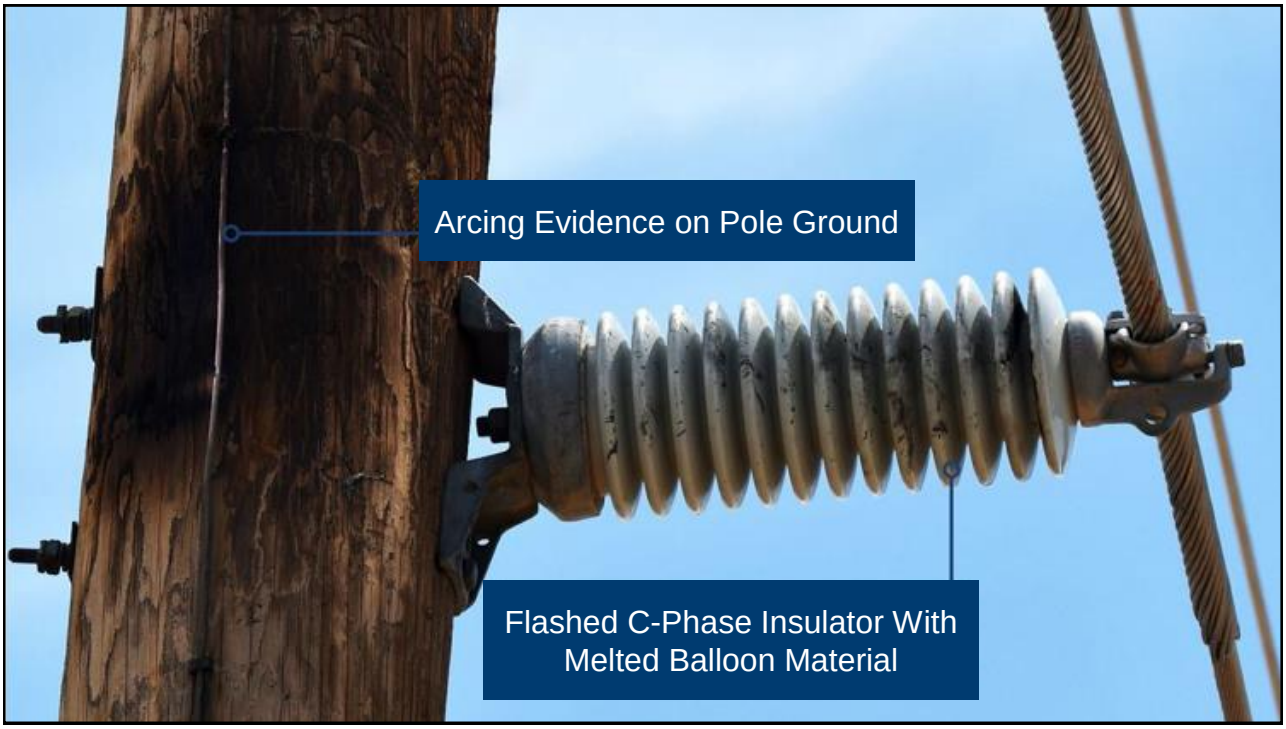
Arcing Evidence on Pole Ground
Flashed C-Phase Insulator With Melted Balloon Material


Snake Causes Breaker to Fail

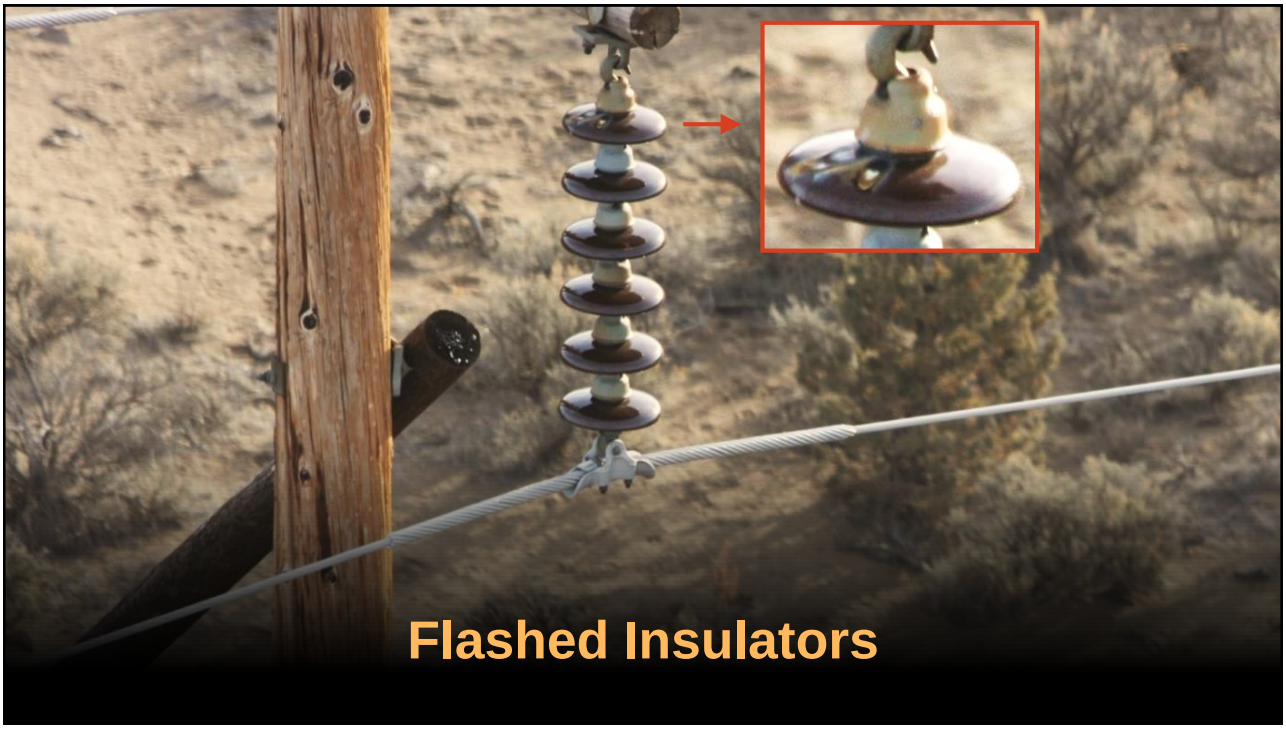
Flashed Insulators

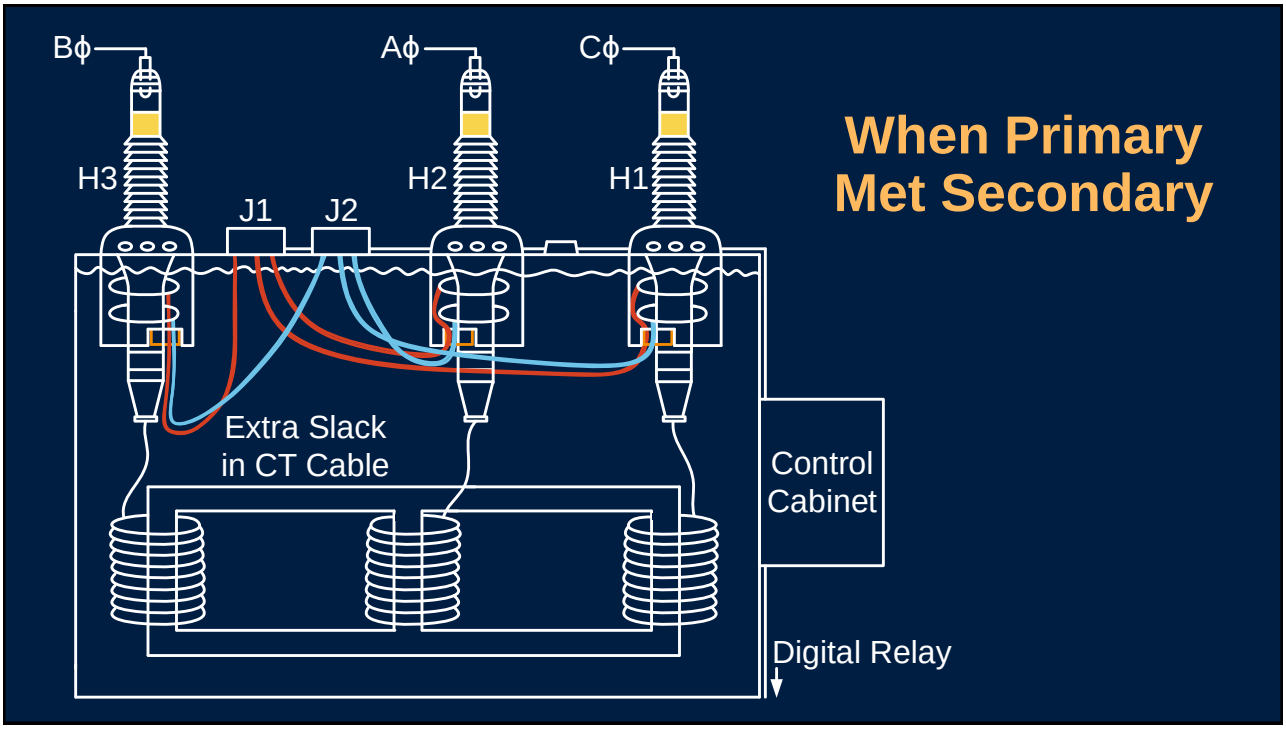
When Primary Met Secondary
Bϕ
Aϕ
Cϕ
H3
H2
H1
J1
J2
Extra Slack in CT Cable
Control Cabinet
Digital Relay


Junction Box Scorched

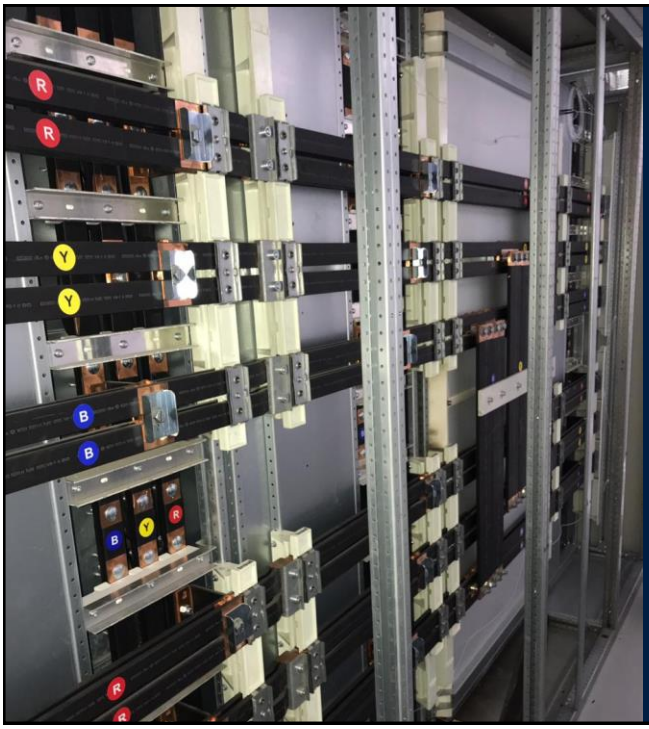

Arc Flash During Commissioning

Culprit Found!

Typical Short-Circuit Type Distribution

Single-phase-to-ground	70–80%
Phase-to-phase-to-ground	10–17%
Phase-to-phase	8–10%
Three-phase	2–3%

Power System Protection Requirements

- ✓ Reliability
- ✓ Selectivity
- ✓ Speed
- ✓ Simplicity
- ✓ Economics

Reliability

- Protection system will perform correctly
- Protection system will operate for in-zone problems (dependability)
- Protection system will not operate for out-of-zone problems (security)

Selectivity

- Ability of protection system to disconnect minimal amount of system
- Ability to isolate problem in shortest amount of time

Speed

- Hazards to humans, equipment damage, and stability problems are minimized when equipment is isolated faster
- Speed and selectivity are frequently at odds – allowing for additional delay before tripping gives better selectivity

Simplicity

Reliability increases when protection systems are kept simple

Economics

Protection system should provide greatest amount of protection, commensurate with components being protected, for minimum total cost

Protection Performance Classification

- Correct performance
- Incorrect performance
  - Failure to trip
  - False tripping (misoperation)

Protective Devices

- Fuses
- Automatic reclosers
- Sectionalizers
- Circuit breakers
- Protective relays

Relay Classification

- Protective
- Regulating
- Reclosing and synchronism check
- Monitoring
- Auxiliary

IEEE C37.2 Device Numbers

51	Time-overcurrent relay
50	Instantaneous overcurrent relay
67	Directional overcurrent relay
21	Distance relay
87	Differential relay
52	Circuit breaker

Protective Relaying System

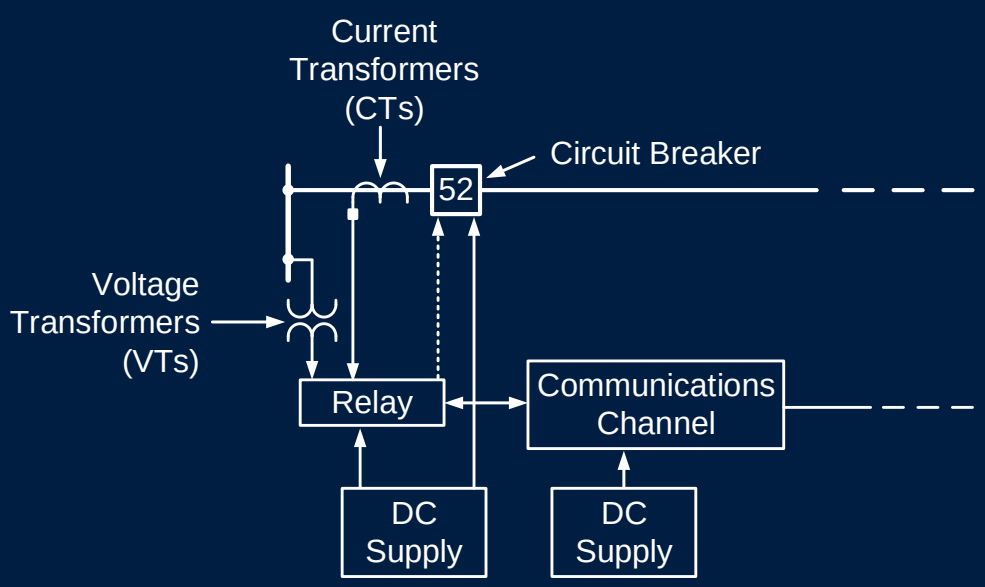

Protection System Elements

Protective Relays

- Monitor
- Detect
- Report
- Trigger

Circuit Breakers

- Interrupt
- Isolate from abnormal condition

Instrument Transformers

CTs

- Current scaling
- Isolation

VTs

- Voltage scaling
- Isolation

Why Does a CT Saturate?

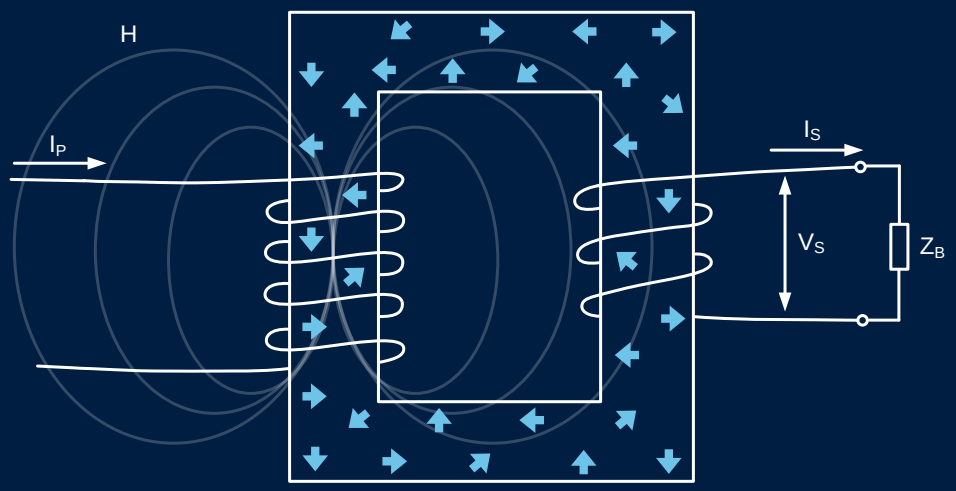

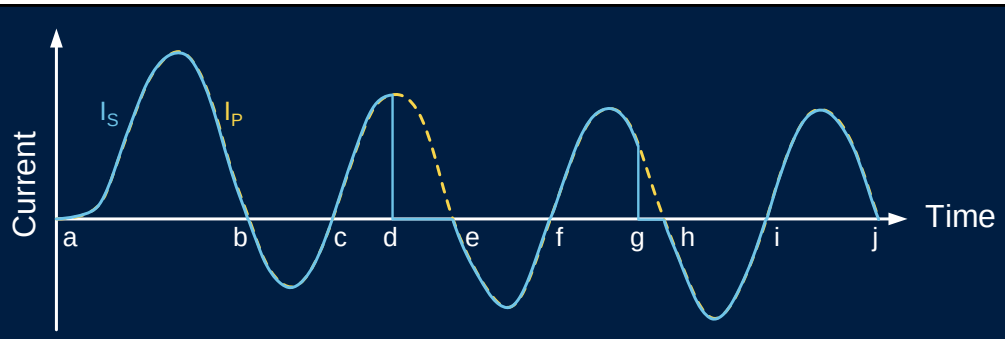

Asymmetrical Saturation

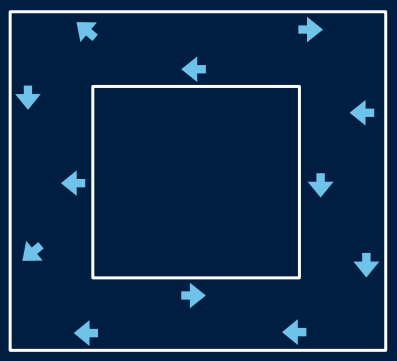

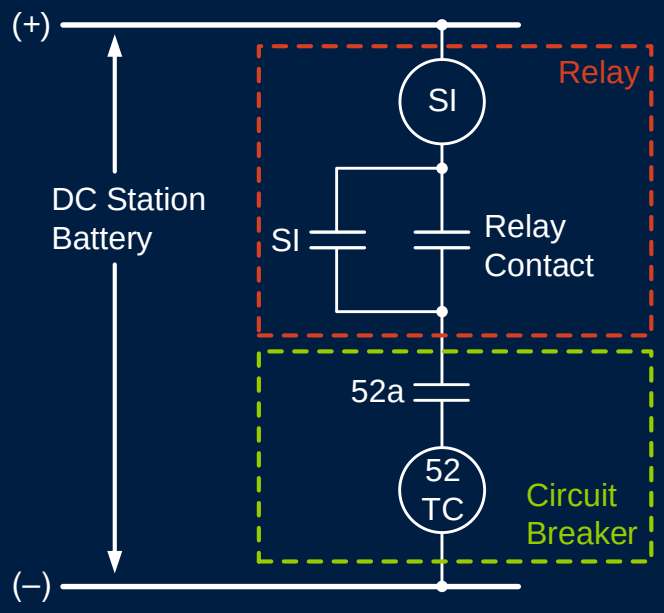

DC Tripping Circuit

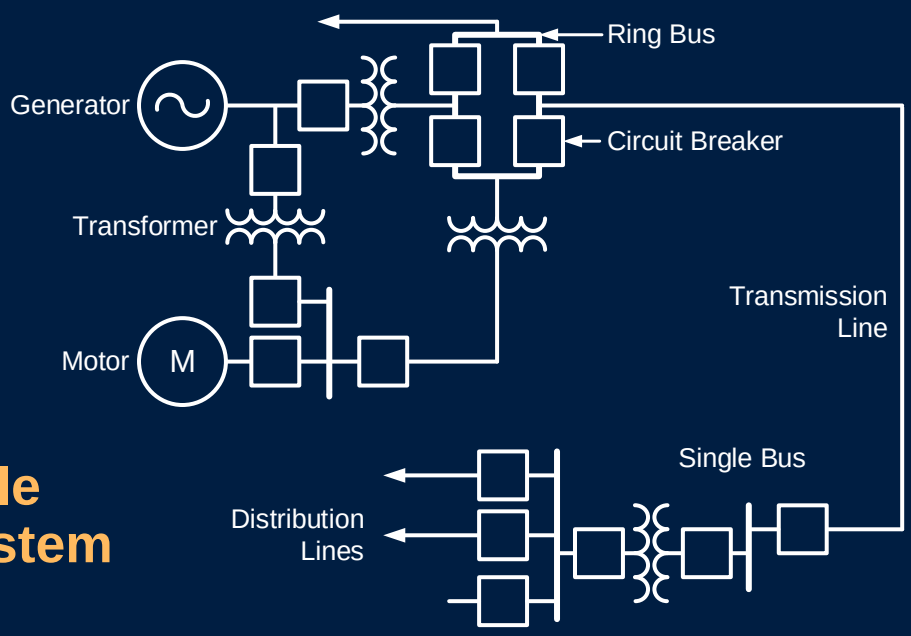

Example Power System

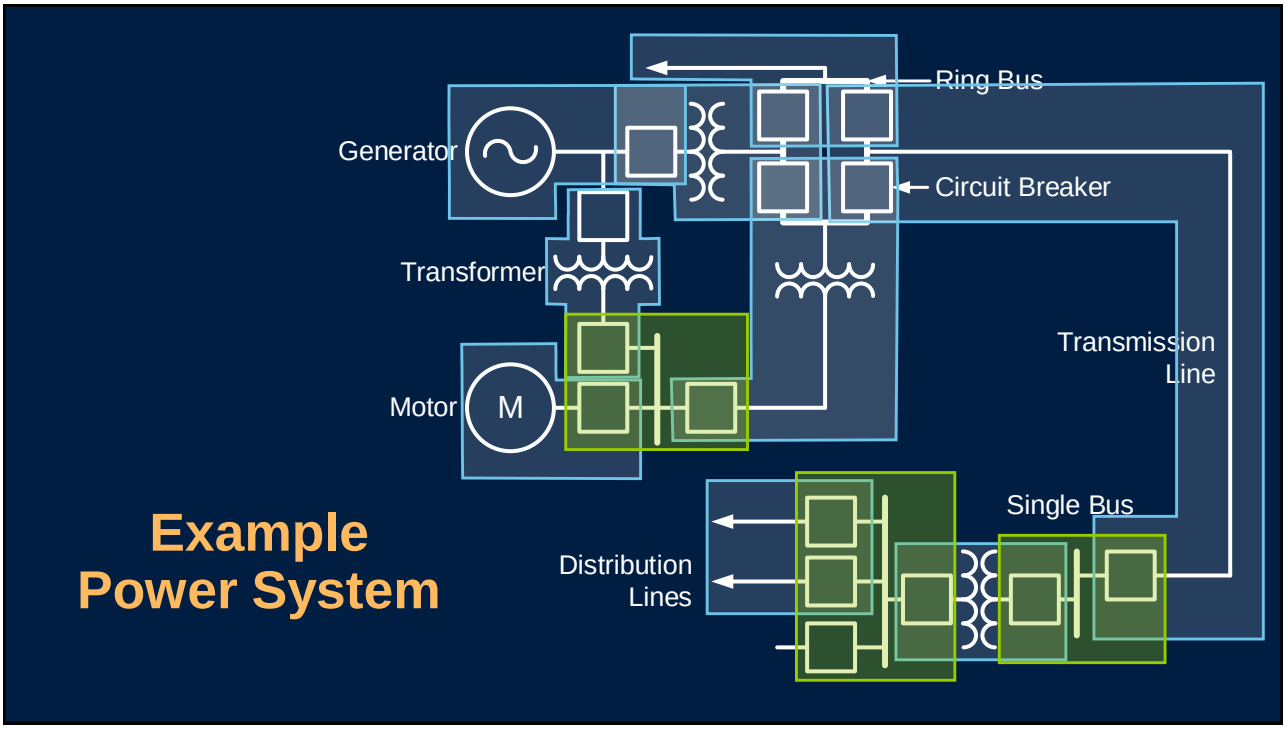
Example
Power System
Ring Bus
Generator
Circuit Breaker
Transformer
Transmission
Line
Motor
M
Single Bus
Distribution
Lines

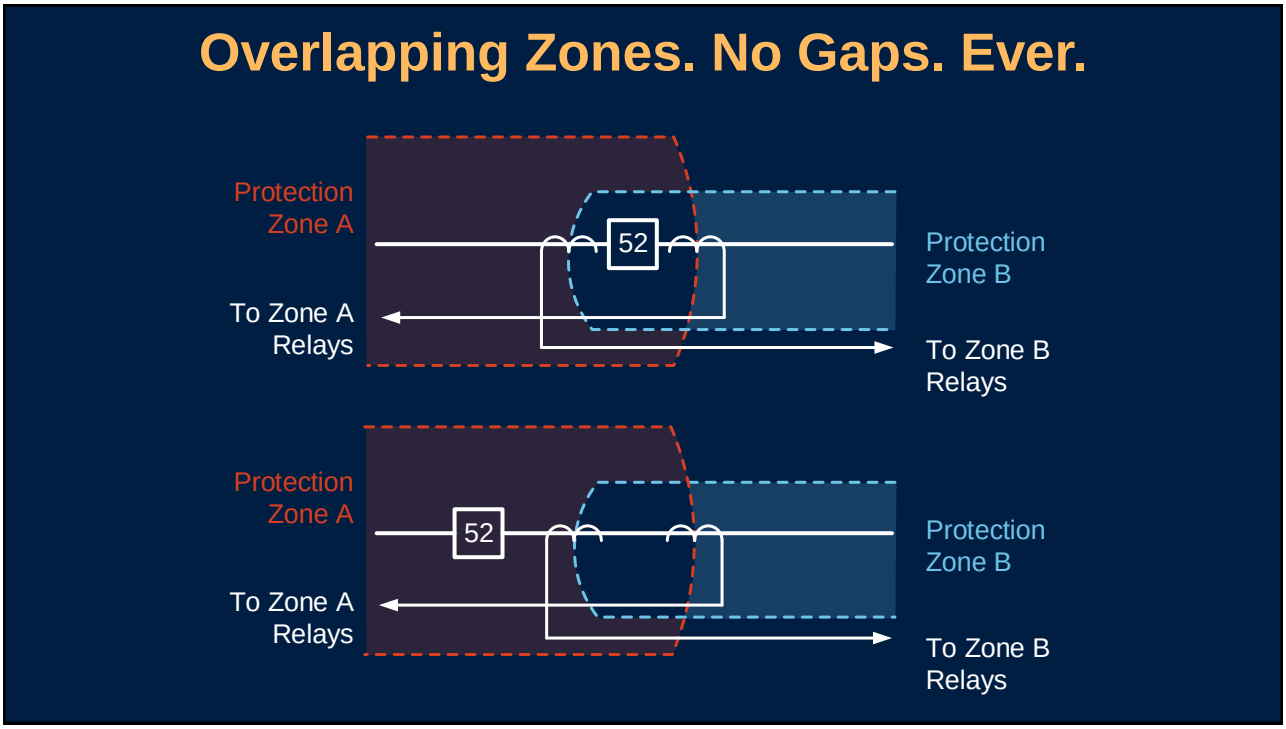
Overlapping Zones. No Gaps. Ever.
Protection
Zone A
52
Protection
Zone B
To Zone A
Relays
To Zone B
Relays
Protection
Zone A
52
Protection
Zone B
To Zone A
Relays
To Zone B
Relays

Circuit Breakers

Dead-Tank Breaker

Live-Tank Breaker

Backup Protection

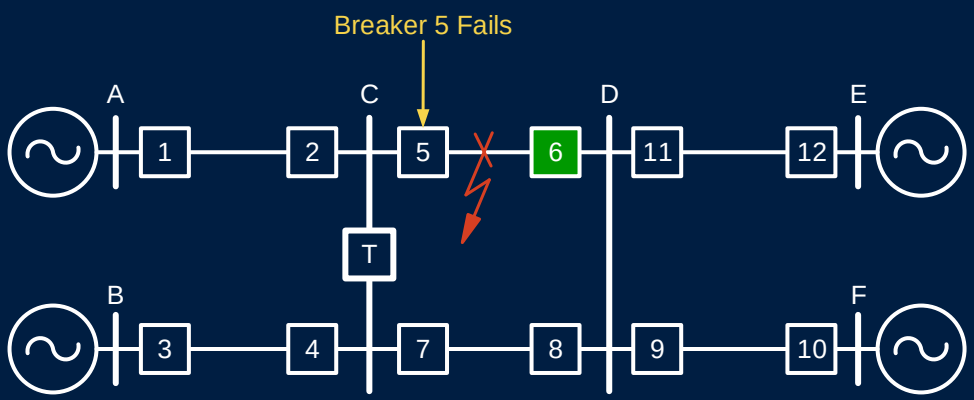

Remote Backup

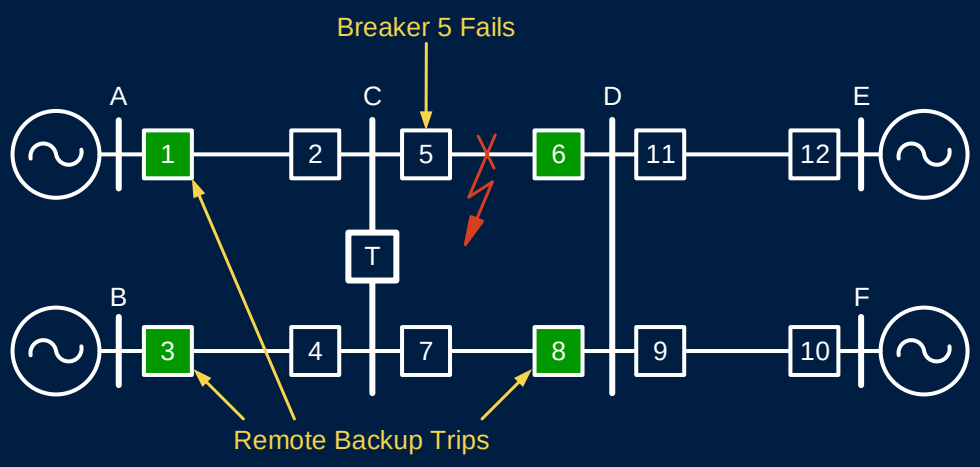

Local Backup

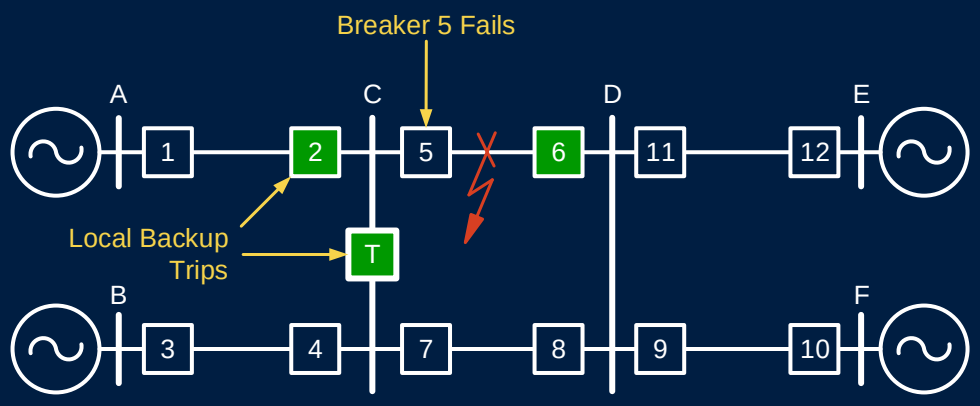

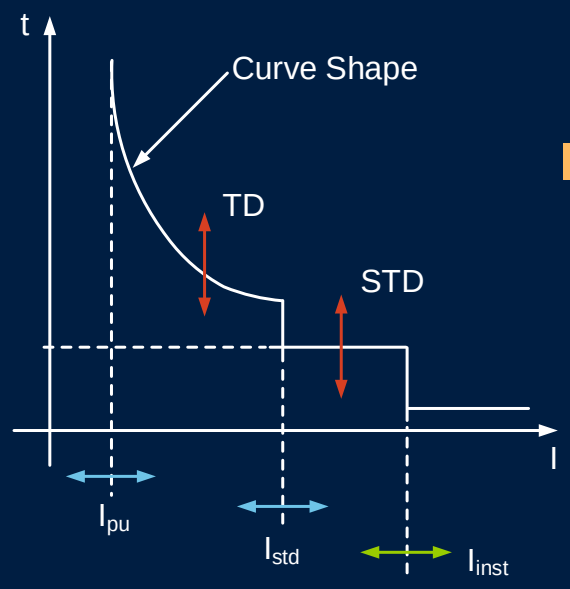

Instantaneous (50) and Time-Overcurrent (51) Characteristics

Overcurrent Relay Coordination

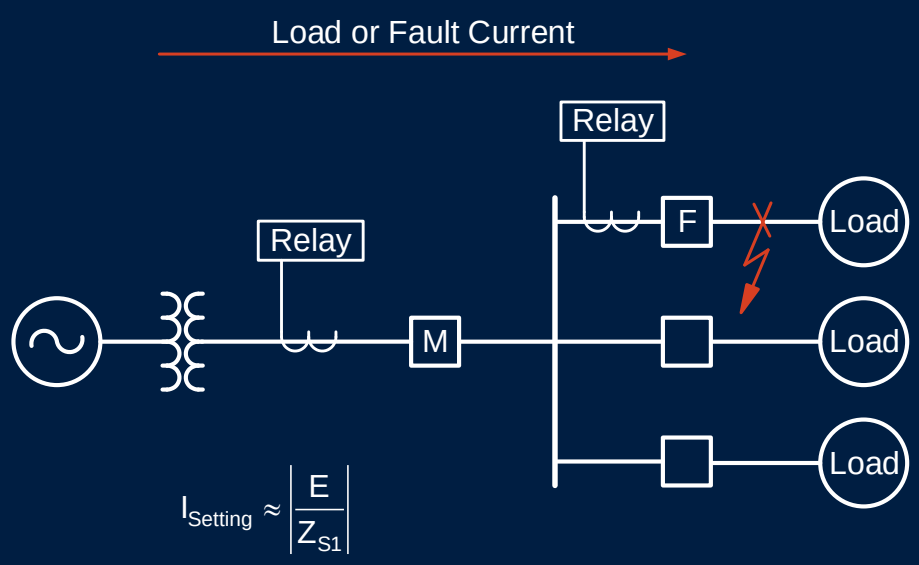

Distance Relay

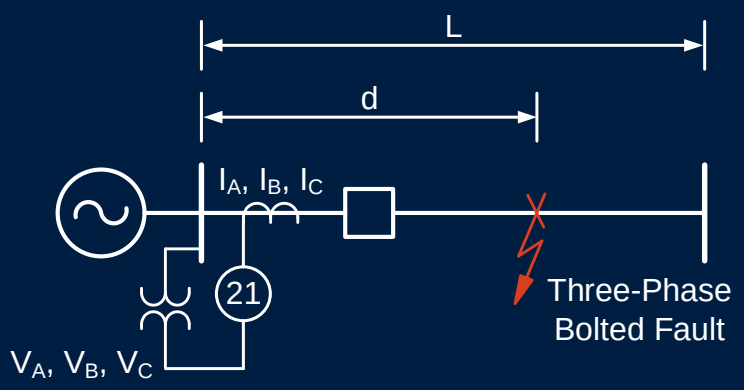

Relay designed to operate when $|V_A| \leq (0.8)|Z_{L1}||I_A|$

Mho Characteristic

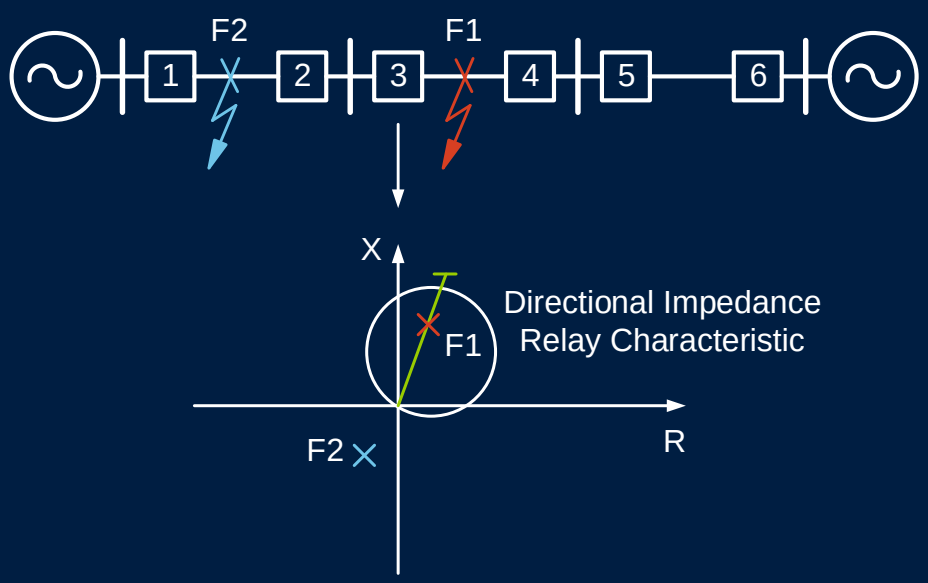

Quadrilateral Characteristic

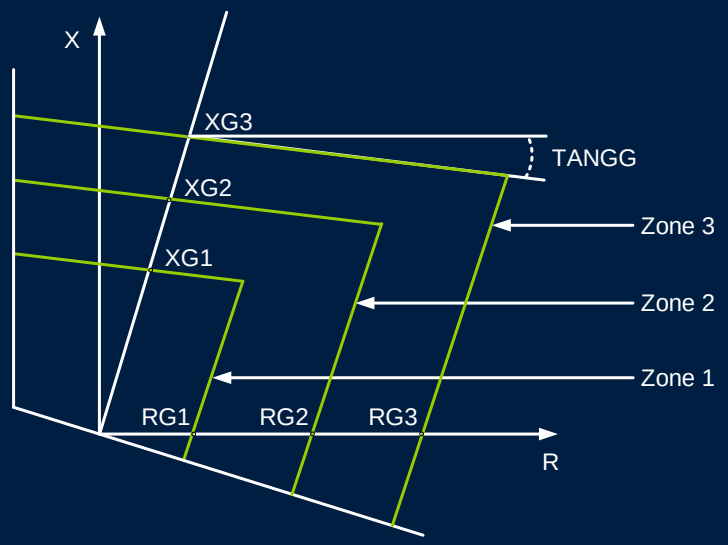

Distance Relay Timing and Coordination

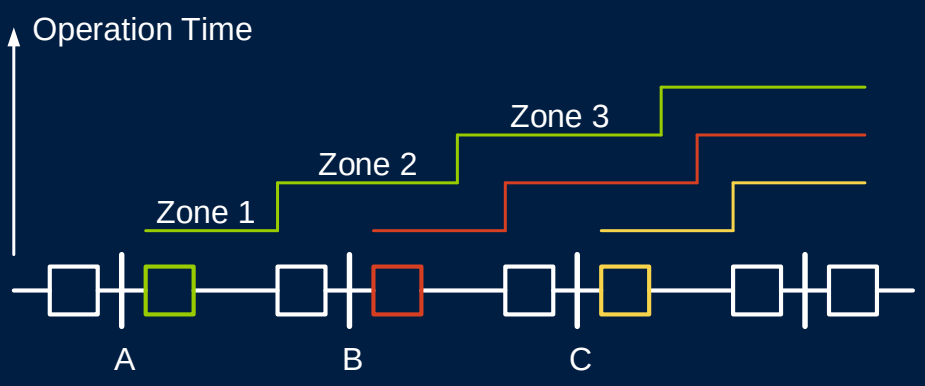

Zone 1 is instantaneous

Why Is Distance Not Enough?

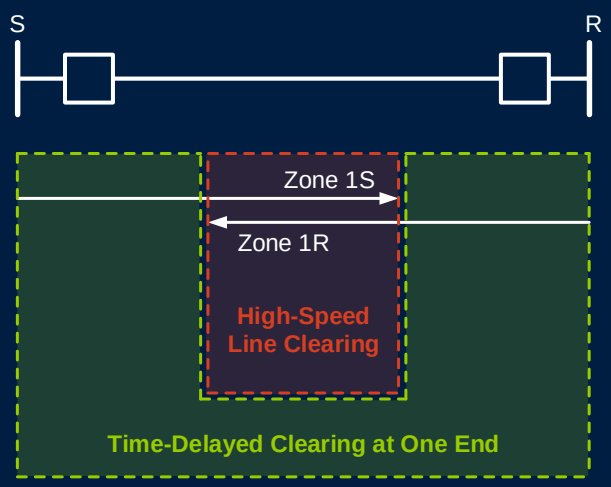

Typical Protection Pilot Schemes

- Direction comparison blocking (DCB)
- Permissive overreaching transfer trip (POTT)
- Directional comparison unblocking (DCUB)
- Direct underreaching transfer trip (DUTT)
- Permissive underreaching transfer trip (PUTT)

Communications Channels
Optical Fiber

- Advantages
  - High bandwidth
  - High reliability
  - Noise immunity
  - Safety
- Disadvantages
  - Cost (offset by shared use)
  - Rerouting (SONET)

Communications Channels
Microwave

- Advantages
  - Power line noise immunity
  - Not affected by faults
- Disadvantages
  - Placement
  - Weather

Communications Channels
Spread-Spectrum Radio

- Advantages
  - Low cost
  - Interference immunity
  - No license required
  - Not affected by faults
- Disadvantage – low bandwidth

Communications Channels
Power Line Carrier

- Advantage – reliable
- Disadvantages
  - Low bandwidth
  - Affected by power line noise
  - Affected by faults

Communications Channels
Telephone Lines

- Advantages
  - Low installation cost
  - Dedicated channel
- Disadvantages
  - Ongoing cost
  - Low reliability
  - Short range

Modulation Techniques

- Proprietary
- On / off
- Frequency shift keying (FSK)

DUTT Logic

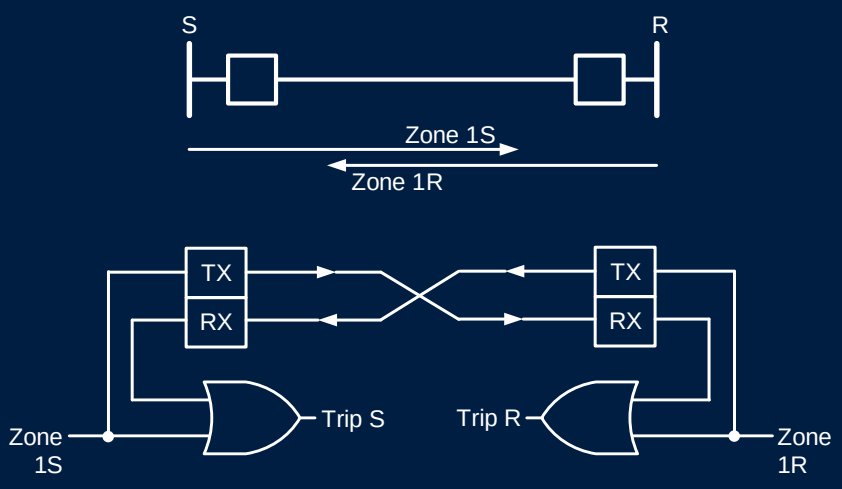

DUTT Scheme

- Underreaching Zone 1 elements send tripping signal
  - Limited fault resistance coverage
  - Immunity to current reversals
- Scheme trips without supervision – susceptible to misoperation with noisy channels

PUTT Logic

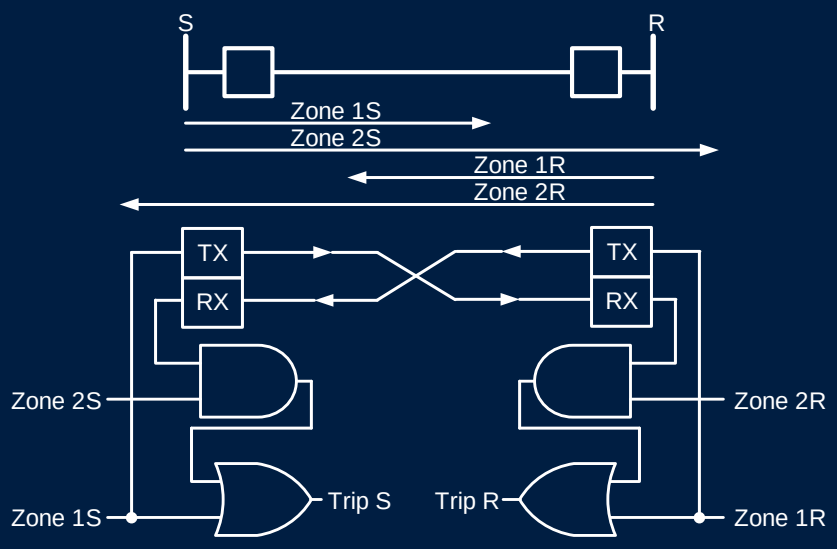

PUTT Scheme

- Underreaching Zone 1 elements send tripping signal
  - Limited fault resistance coverage
  - Immunity to current reversals
- Overreaching Zone 2 elements trip on receipt of signal, making PUTT scheme more secure than DUTT scheme

POTT Logic

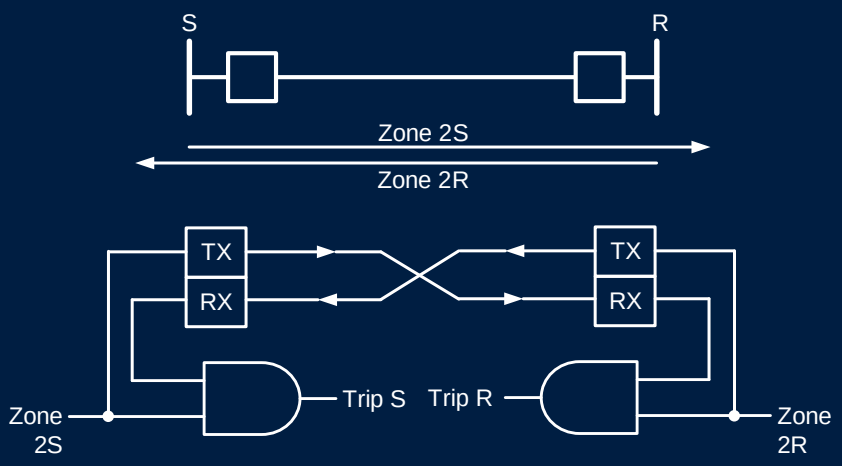

DCB Logic

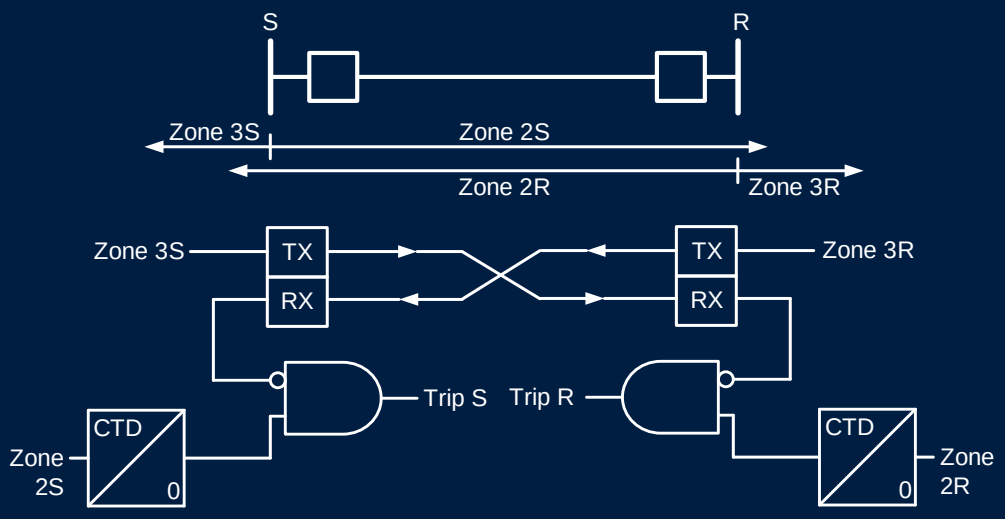

Differential Overcurrent

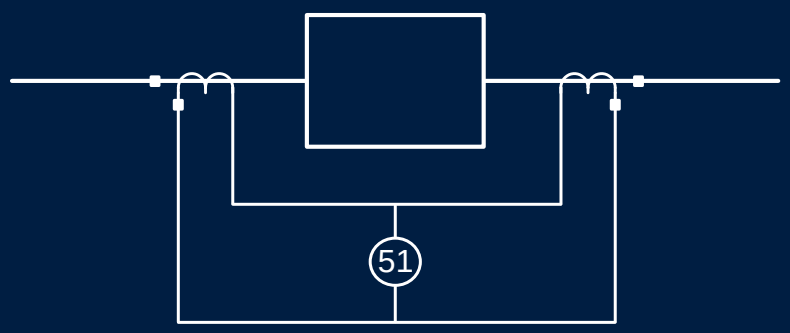

Differential Overcurrent

External Fault

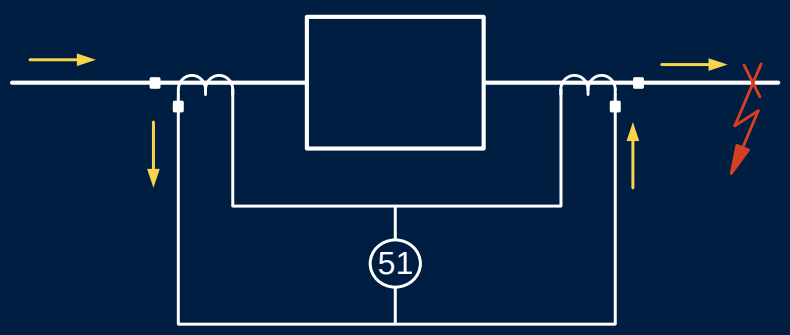

Differential Overcurrent

Internal Fault

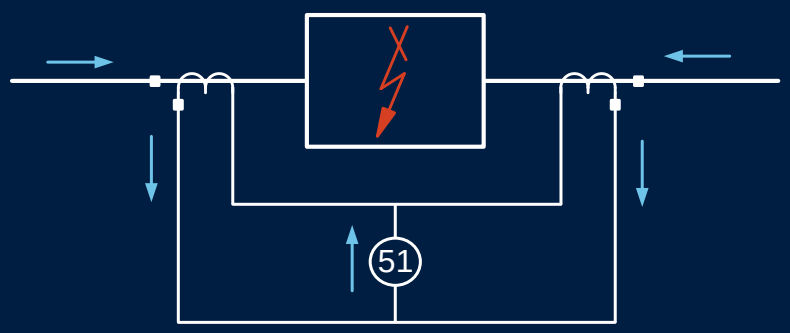

Effect of CT Saturation

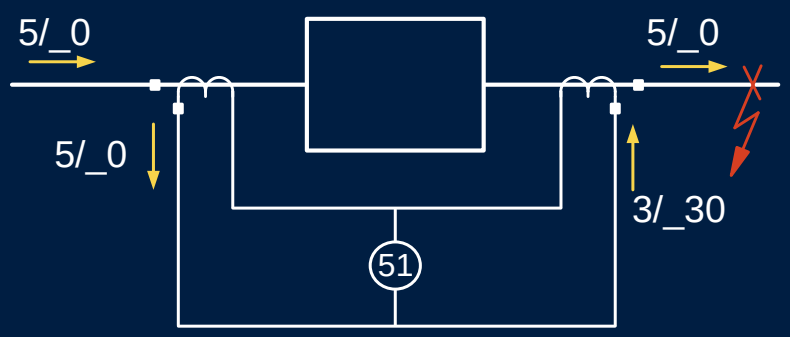

Percentage Differential Protection Principle

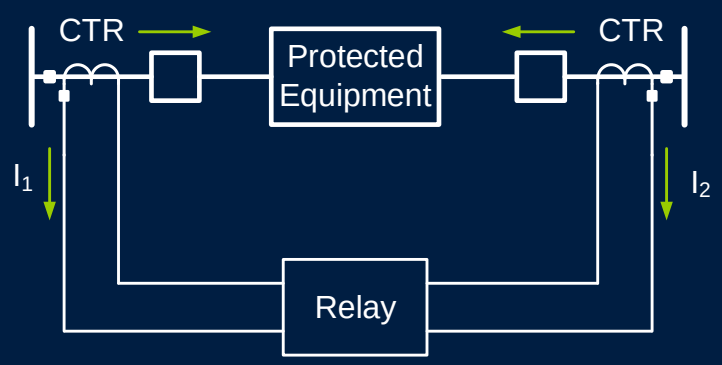

$$IOP = |\dot{I}_1 + \dot{I}_2|$$

$$IRT = 0.5 \bullet (|\dot{I}_1| + |\dot{I}_2|)$$

Percentage Restraint Characteristic

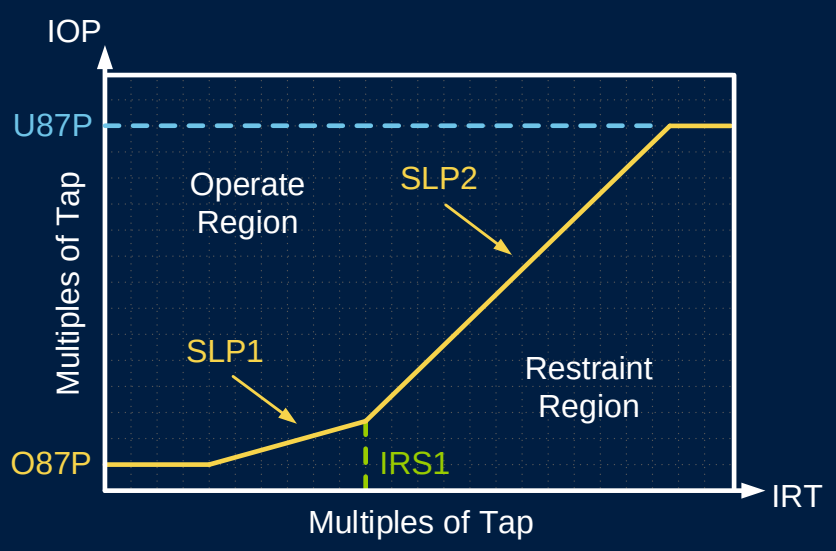

$$IOP = |\dot{I}_1 + \dot{I}_2|$$

$$IRT = k \bullet (|\dot{I}_1| + |\dot{I}_2|)$$

Adaptive Slope

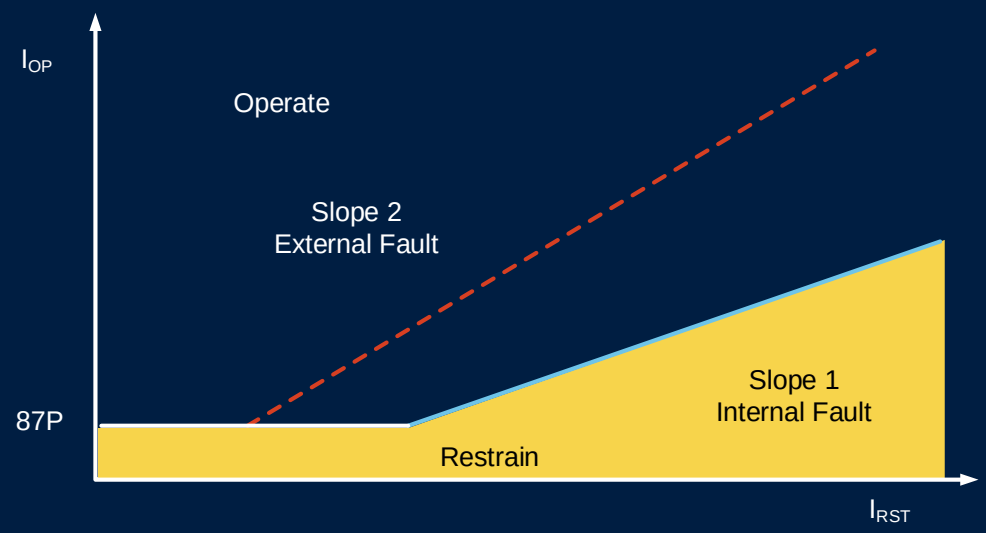

High-Impedance Differential Protection

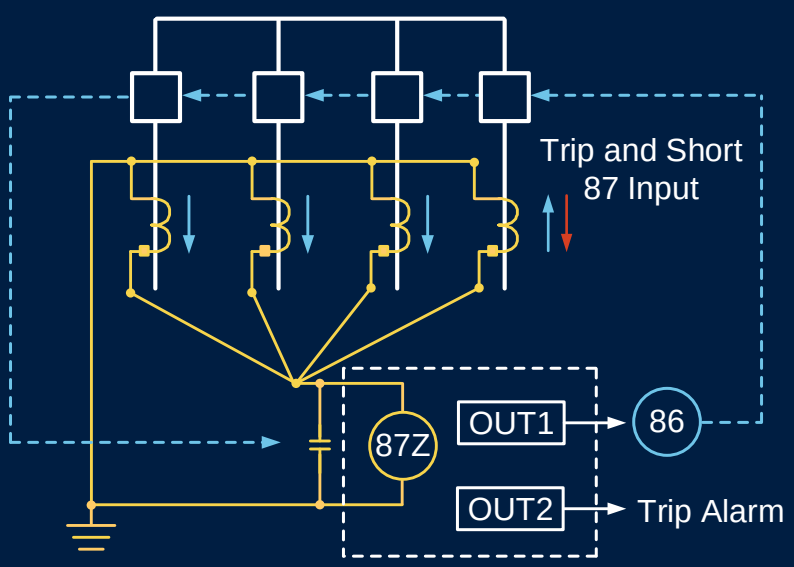

How Many Relays for One Line?

3 phase + 3 ground + auxiliaries

1 relay has it all, and much more!

Microprocessor-Based Relay Advantages

- Multifunction devices
- Negative-sequence element
- Low-burden devices
- Programmable logic; very flexible
- Automatic self-tests
- Greater sensitivity due to high-accuracy metering

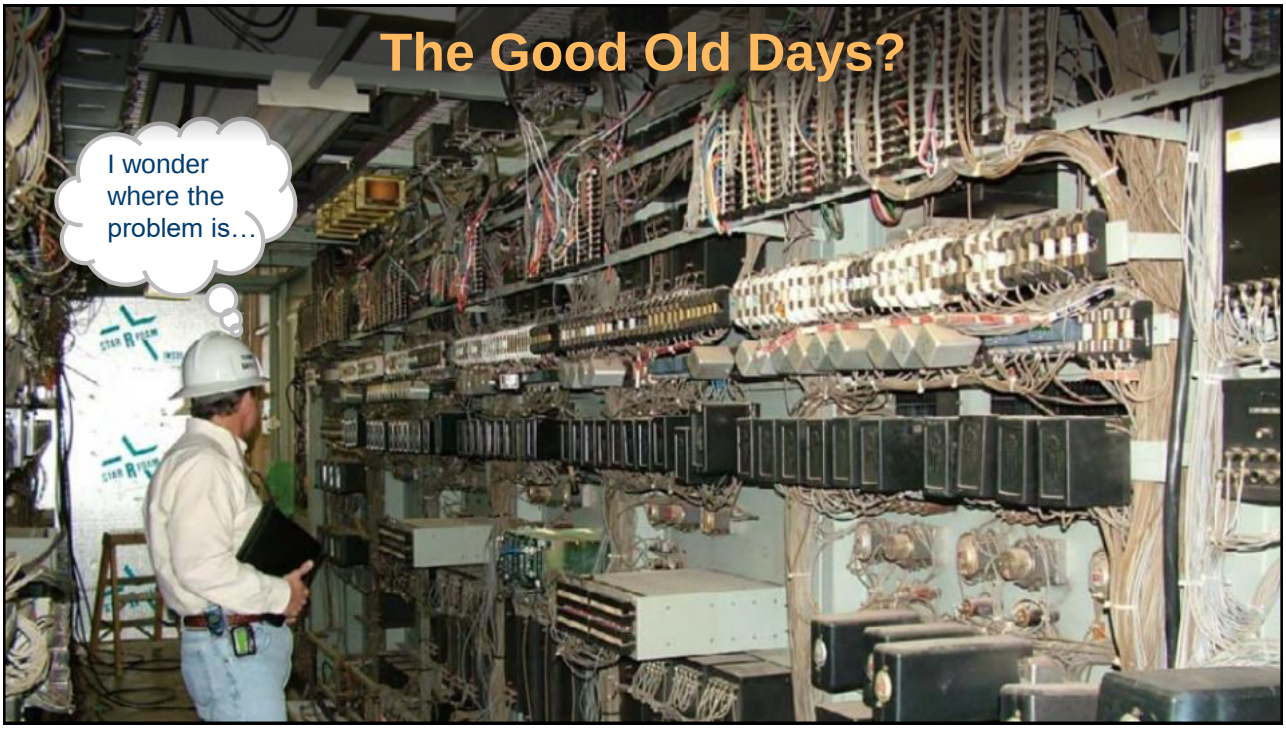

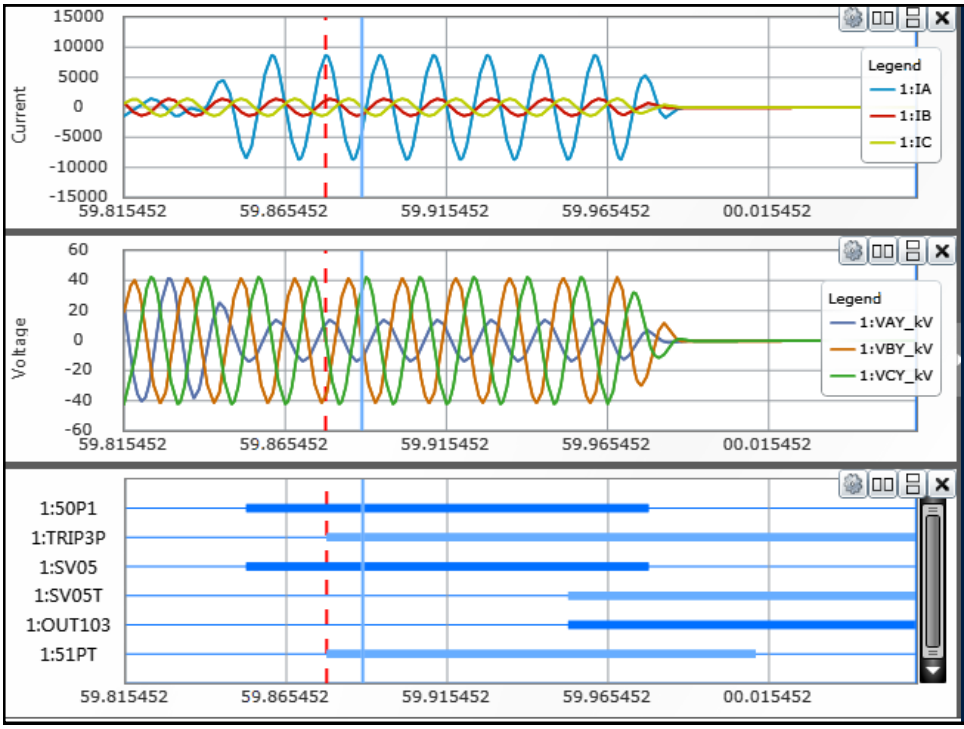

Root Cause Found!

Digital Relay I/O Scheme

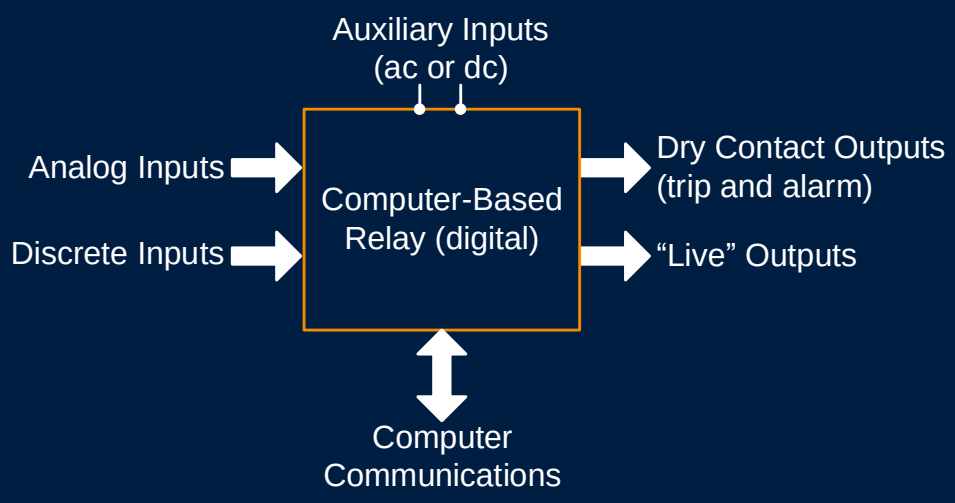

Digital Relay Architecture

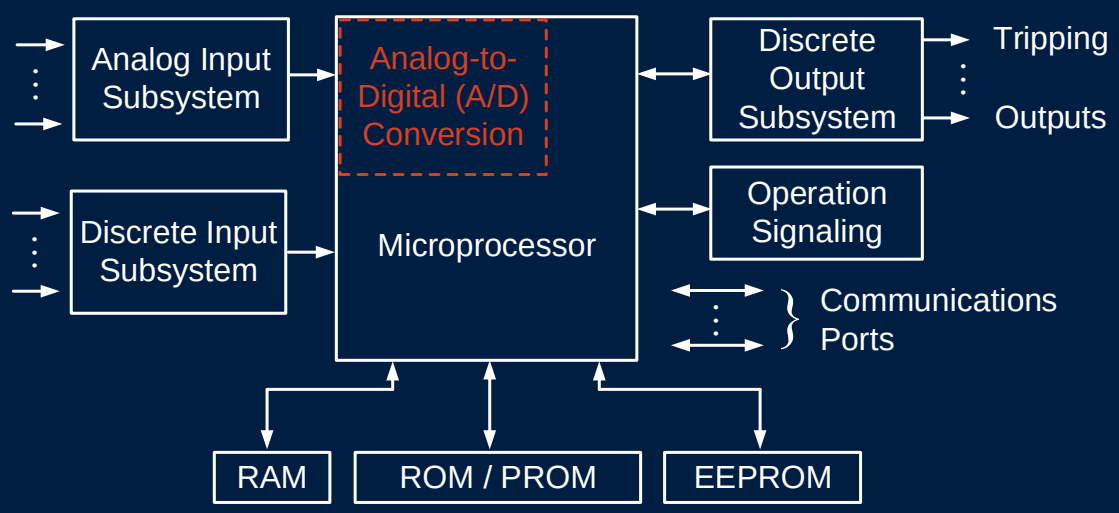

Signal Path for Microprocessor-Based Relays

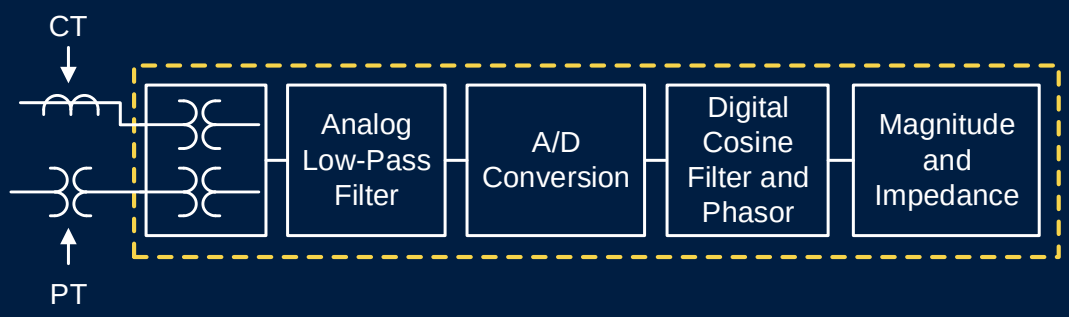

A/D Conversion

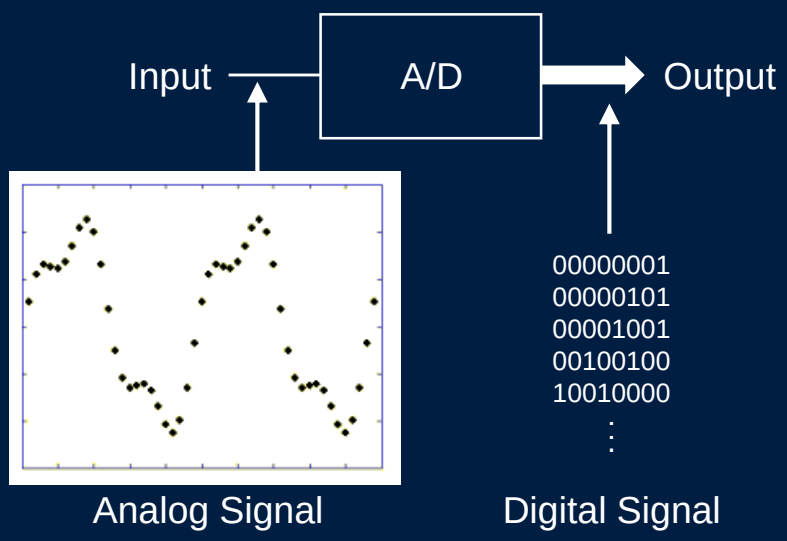

Digital Filtering

Nonfiltered Signal
(samples)

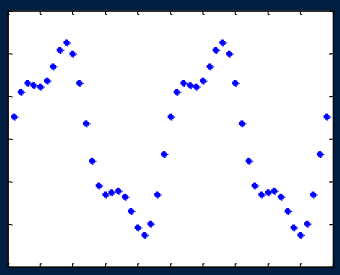

Digital Filtering

Filtered Signal
(samples)

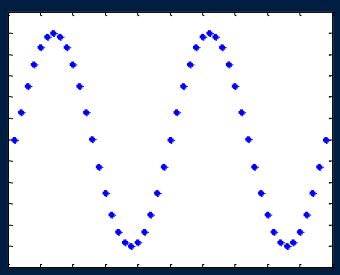

Phasor Calculation

Filtered Signal
(samples)

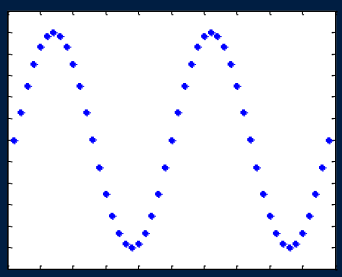

Phasor Calculation

Phasor Samples:
Magnitude and Angle
Versus Reference

Programmable Logic

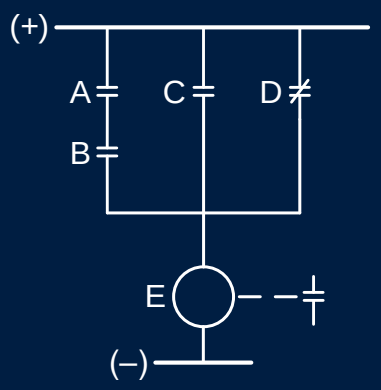

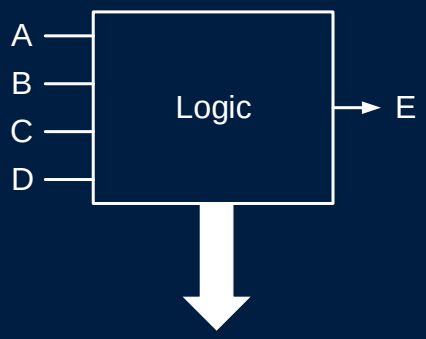

Equation Implemented

E = A AND B OR C OR NOT D

Digital Relay Algorithm

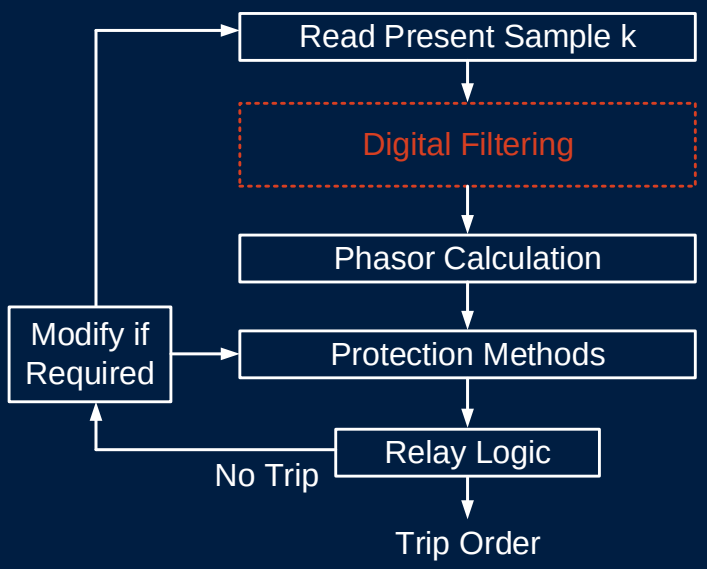

It Takes a Cycle to Catch a Cycle

- Phasors depend on sinusoidal steady state
- Faults change the network
- We want to determine where … fast!
- We want to determine sinusoidal steady state and filter out everything else
- Shorter windows make us faster but less accurate

Modern Distance Relays: 8–16 ms

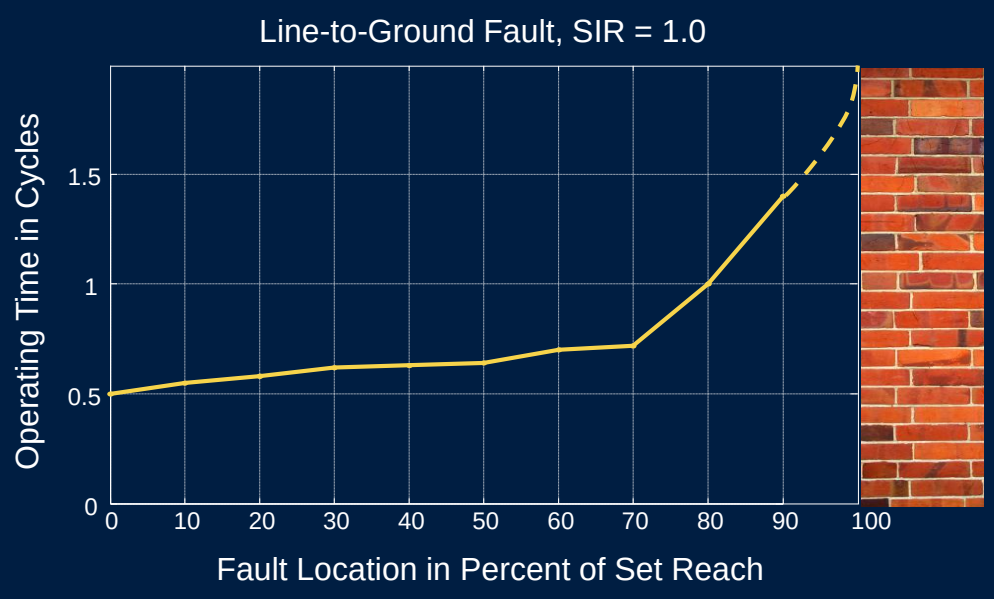

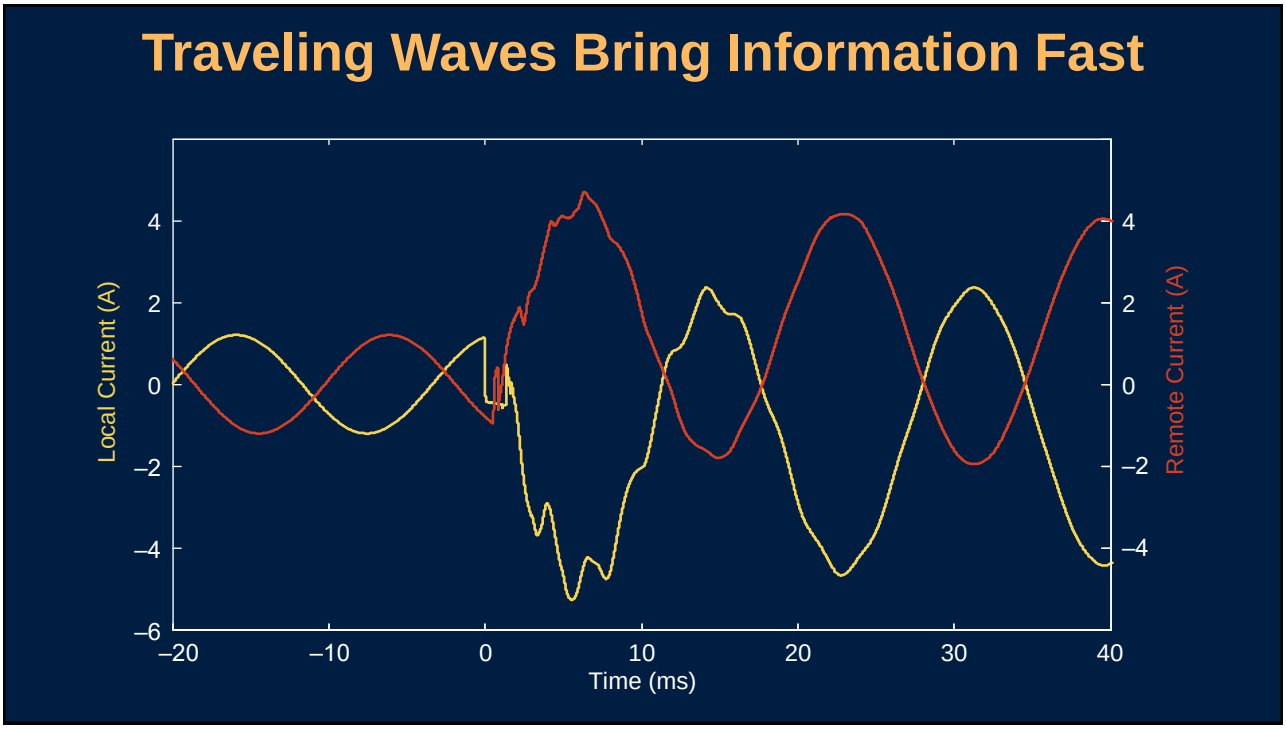
Traveling Waves Bring Information Fast
Local Current (A)
Remote Current (A)
Time (ms)
4
2
0
–2
–4
–6
–20
–10
0
10
20
30
40

Traveling Waves Bring Information Fast

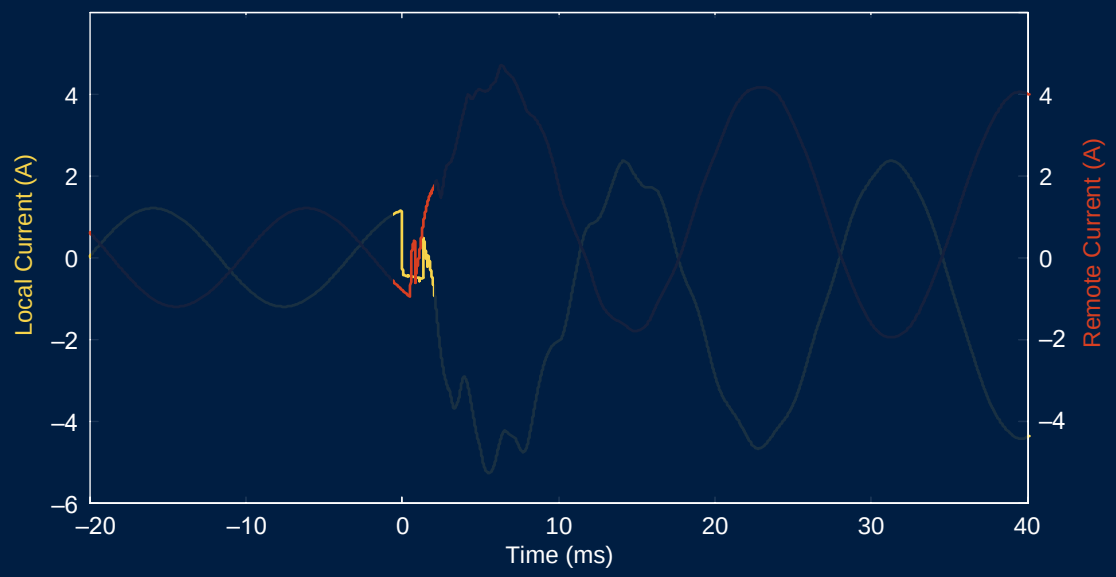

Internal Phase Fault (100 km, 400 kV)

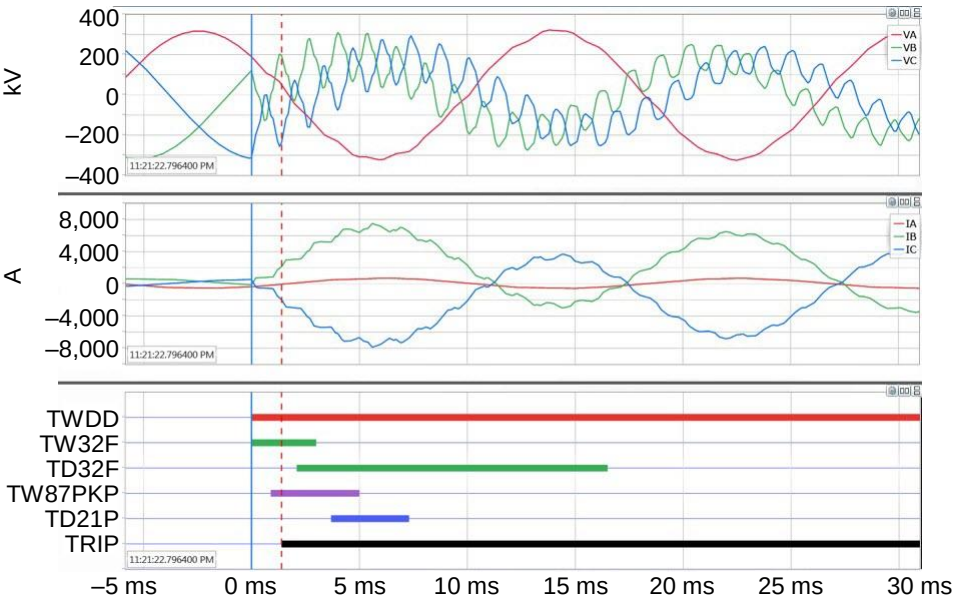

BC fault at 50 km

TW32	0.1 ms
TD3	2.1 ms
TD21	3.7 ms
TW87	0.9 ms

Fault Location = 49.993 km

One-Second Power System View

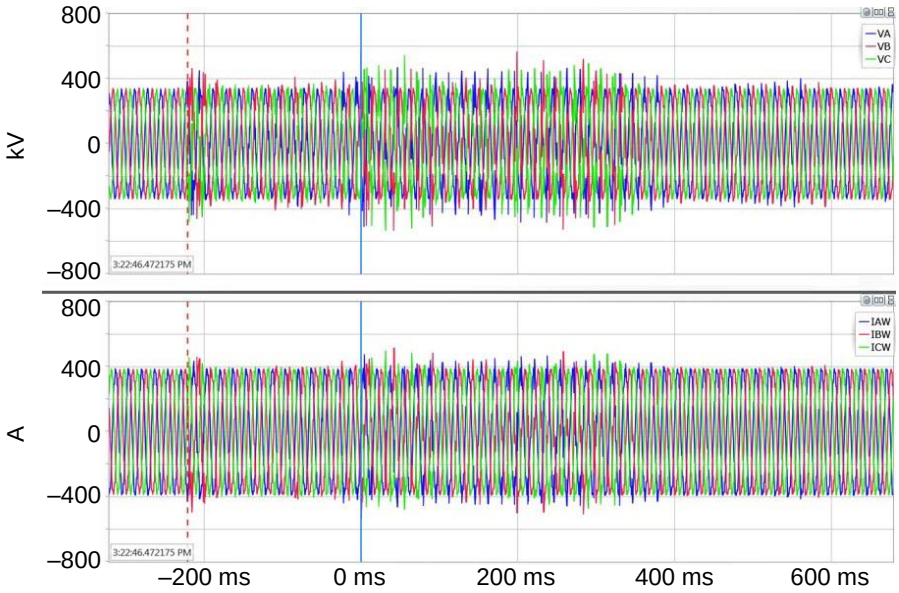

One-Cycle Power System View

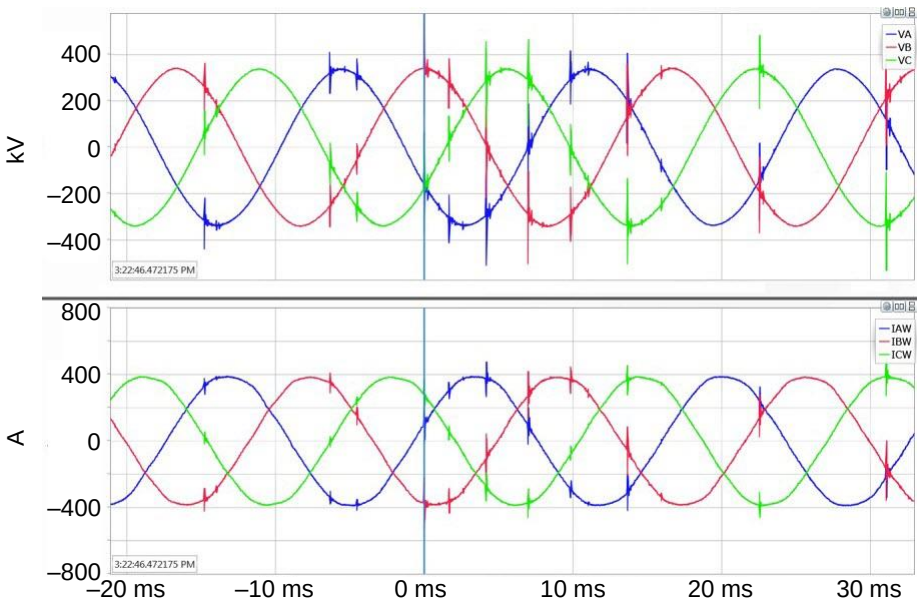

One-Millisecond Power System View

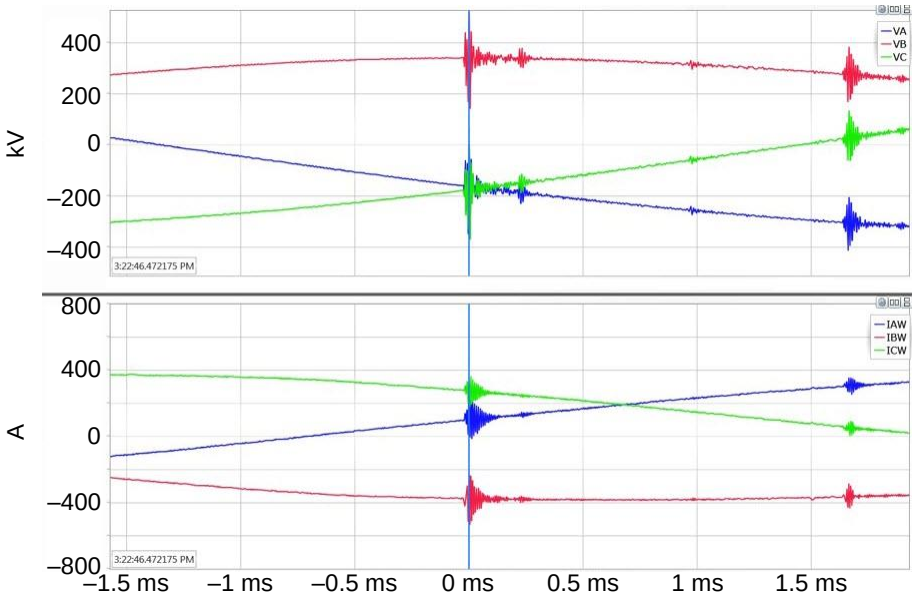

Submillisecond Power System View

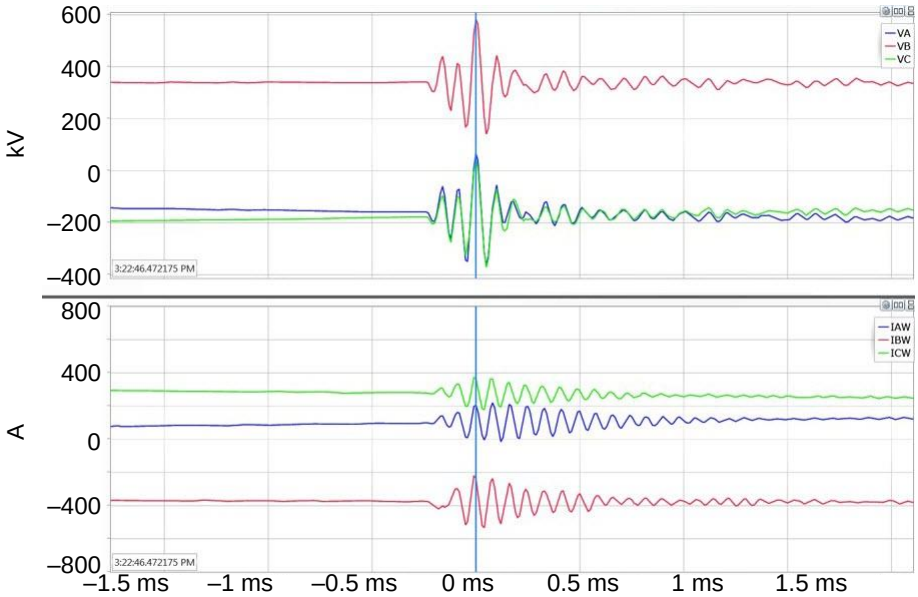

One-Microsecond Power System View!

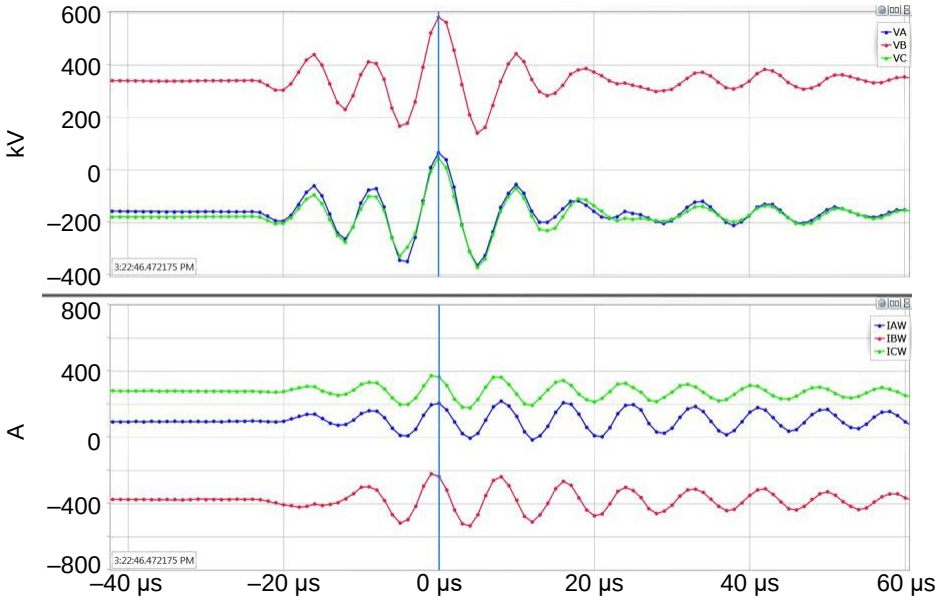


Thank You!