Return of the Dedicated DFR

How IEC 61850 Process bus simplifies DFR installation

Rich Hunt, Lucas Barcelo de Oliveira – GE Grid Solutions

Presented by: JC Theron – GE Grid Solutions

71th Texas A&M Conference for Protective Relay Engineers 2018

Introduction

- “DFR” is short hand for application requirement:
  - Specific non-operational data to improve power system operation
- Focus should be on the application first, not the device

Need data for…

- Understand and document how secondary equipment and primary equipment respond to abnormal events such as short circuits
- Verify power system models and short circuit calculations
- Identify power quality disturbances and provide for event analysis
- Document, verify, and analyze the performance of primary equipment to enable better maintenance practices
- Detect incipient failure of primary equipment such as bushings and instrument transformers
- Understand wide-area power system disturbances, including power system oscillations
- Provide data for power system planning models

General Requirements

- 3 types of recording:
  - FR (oscillography)
  - SER
  - Disturbance data (phasor)
- Data types and channels (*Measured and calculated*)
- Station-wide coherence of data
- Triggers (*Supervisory are desired*)
- Record length and format (*COMTRADE, COMFEDE*)
- Storage
- NA: NERC PRC-002-2

DFR Installations

Centralized DFR

Pluses

- Coherent records
- Supervisory triggers
- Record formats
- Storage

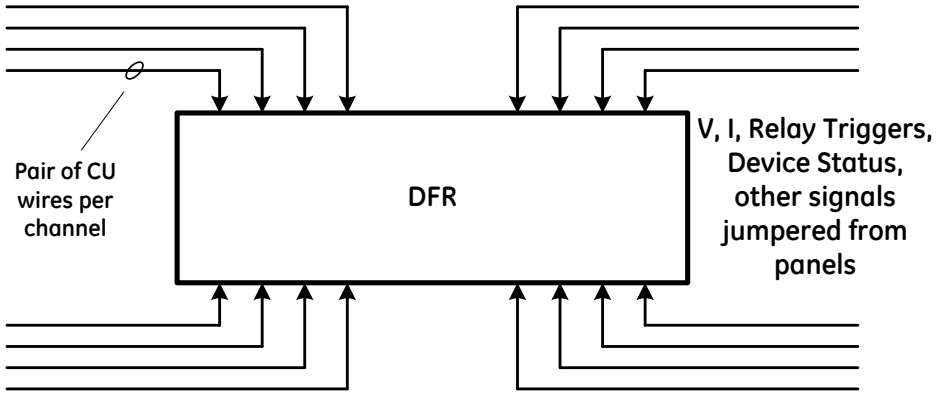

Minuses

- Installation cost: up to 10x material cost of recorder!

DFR Installations

Distributed DAUs

Pluses

- Transfer work of DAU wiring to OEMs
- Like a centralized DFR, but better installation costs

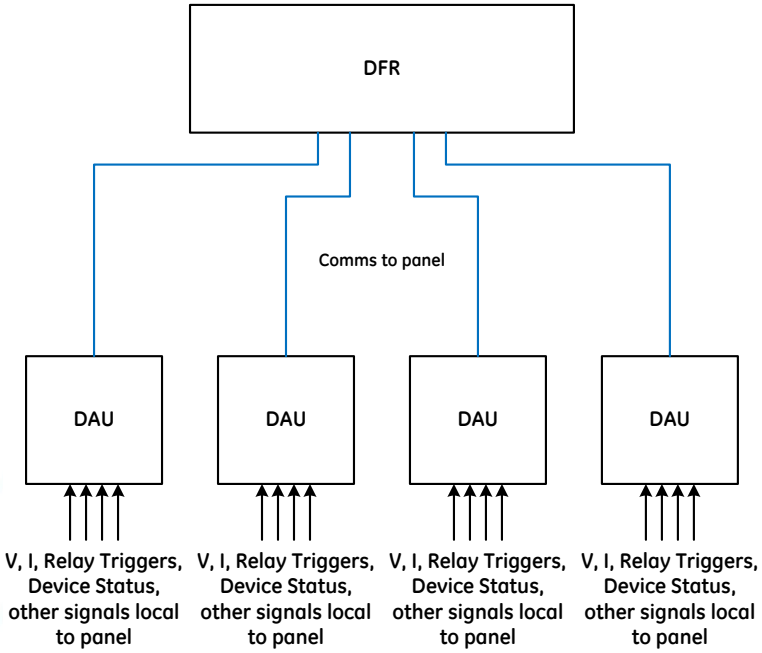

Minuses

- Still installation cost
- Proprietary comms
- DAU are dedicated devices

DFR Installations

Distributed DFRs

Pluses

- Transfer work of DFR wiring to OEMs
- Like a centralized DFR, but better installation costs
- Zone-based recording

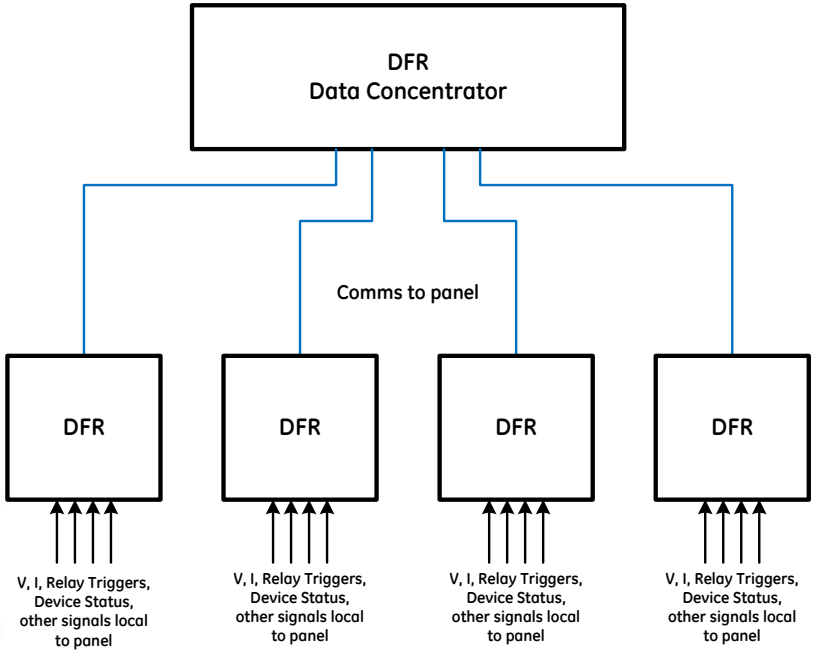

Minuses

- Still installation cost
- Proprietary comms
- DFRs are dedicated devices
- Data concentrator is probably standalone, proprietary

DFR Installations

Distributed Recording ("Virtual DFR")

Pluses

- Installation costs: devices are multi-purpose

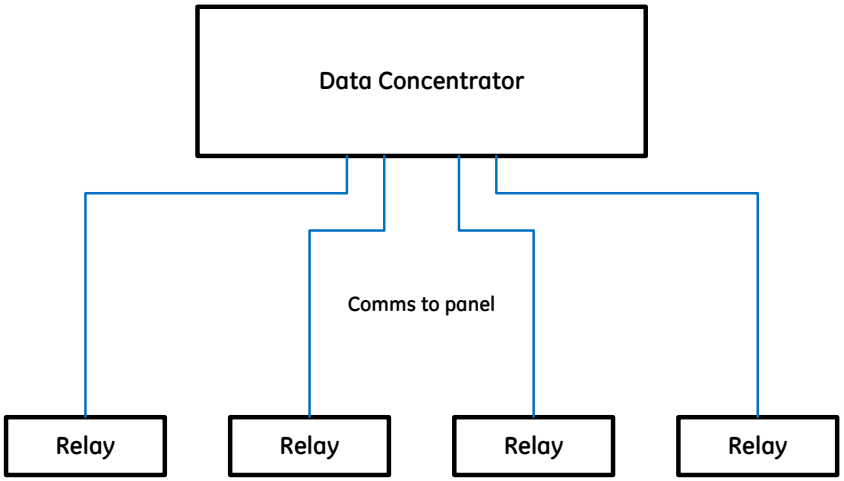

Minuses

- Triggers
- Data types and channels
- Record length (and format)
- Coherence of data
- Storage

DFR Installations

Distributed Recording ("Virtual DFR")

Functional Requirement		Centralized	DAUs	Local DFRs	Virtual DFR
Channels	Analog	Y	Y	Y	Y
	Binary	Y	Y	Y	Y
	Calculated	Maybe	Maybe	Maybe	N: protection quantities
	Logic	Maybe	Maybe	Maybe	Y
Triggers	Analog	Free	Free	Free	Protection Element
	Binary	Free	Free	Free	Free
Records	Length	Long	Long	Long	Short / medium
	Sampling Rate	H	H	H	L / M
	Coordinated	Y	Y	Y: at DC	N: separate device
	Time Stamp	Y: record	Y: record	Y: record	Y: record
	Storage	H, native	H, native	H, at DC	L: separate device
Installation	Wiring	Lots	Lots	Lots	Lots
	Communications	None	Analog, serial, digital proprietary	Serial, digital proprietary	Serial, digital Open
	Cost	$$$$	$$$	$$$	$$

DFR Choice

- Industry split between dedicated, virtual
  Best quality of data vs. Best installed cost
- But this focus is on managing analog signals: what's the most effective way to acquire the information needed for the "DFR application".
- **BUT THIS IS WRONG:** focus should be on data needs and application

Question: can IEC 61850 make this better?

IEC 61850 and Functional Modeling

IEC 61850 is essentially two concepts:

- That we can "know" a piece of data

  Where it comes from
  What it represents
  That we can trust it

- That once we "know" a piece of data, we can "share" this data

  Using "right now" communications
  Using "must trust" communications

How 61850 works

- Functional modeling of the power system - ***Logical Nodes***
- Self description of data – ***Common Data Classes***

  Source Device::Logical Node::Data Class::Data Attribute::Data

- Application-based transmission
  - Publish-subscribe for "right now" data – ***GOOSE, SV***
    Multicast messages operating at media level (MAC address)
  - Client-server for "must trust" data – ***MMS***
    "Two party association" operating at network level (IP address)
- XML for configuration, documentation

Simple modeling example

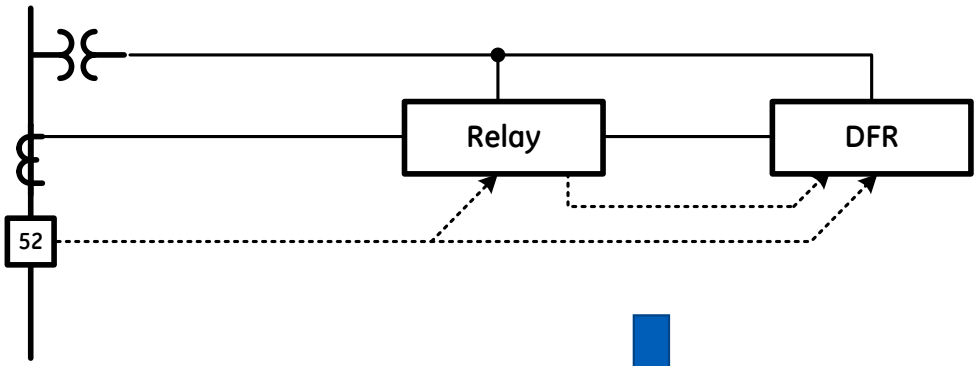

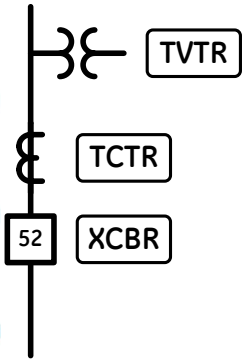

TVTR	V as SV
TCTR	I as SV
XCBR	Circuit Breaker
PTRC	Protection Trip
RDRE	Disturbance Recording

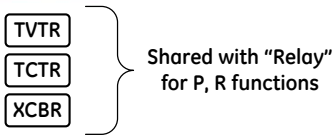

Recording under IEC 61850

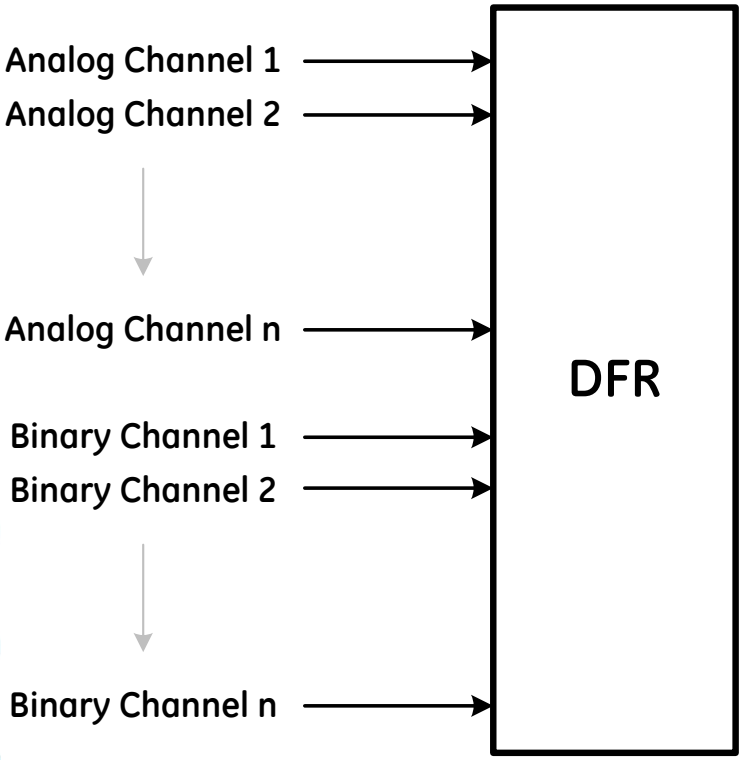

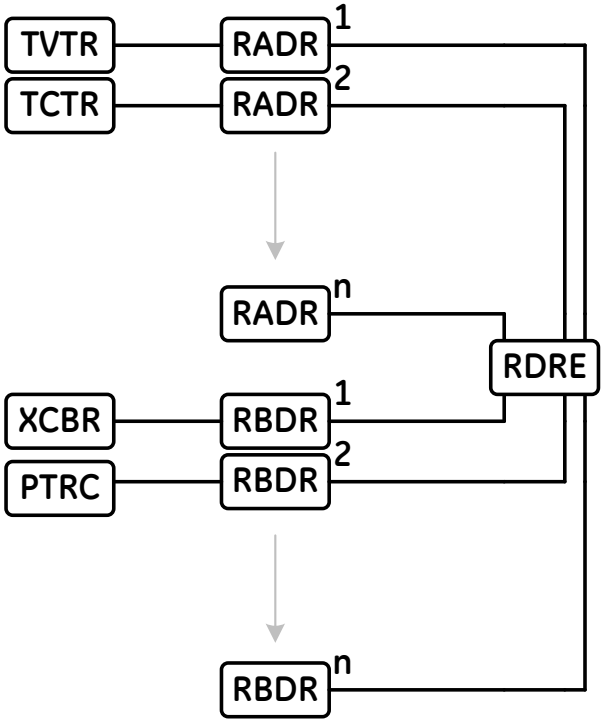

IEC 61850 Message Types

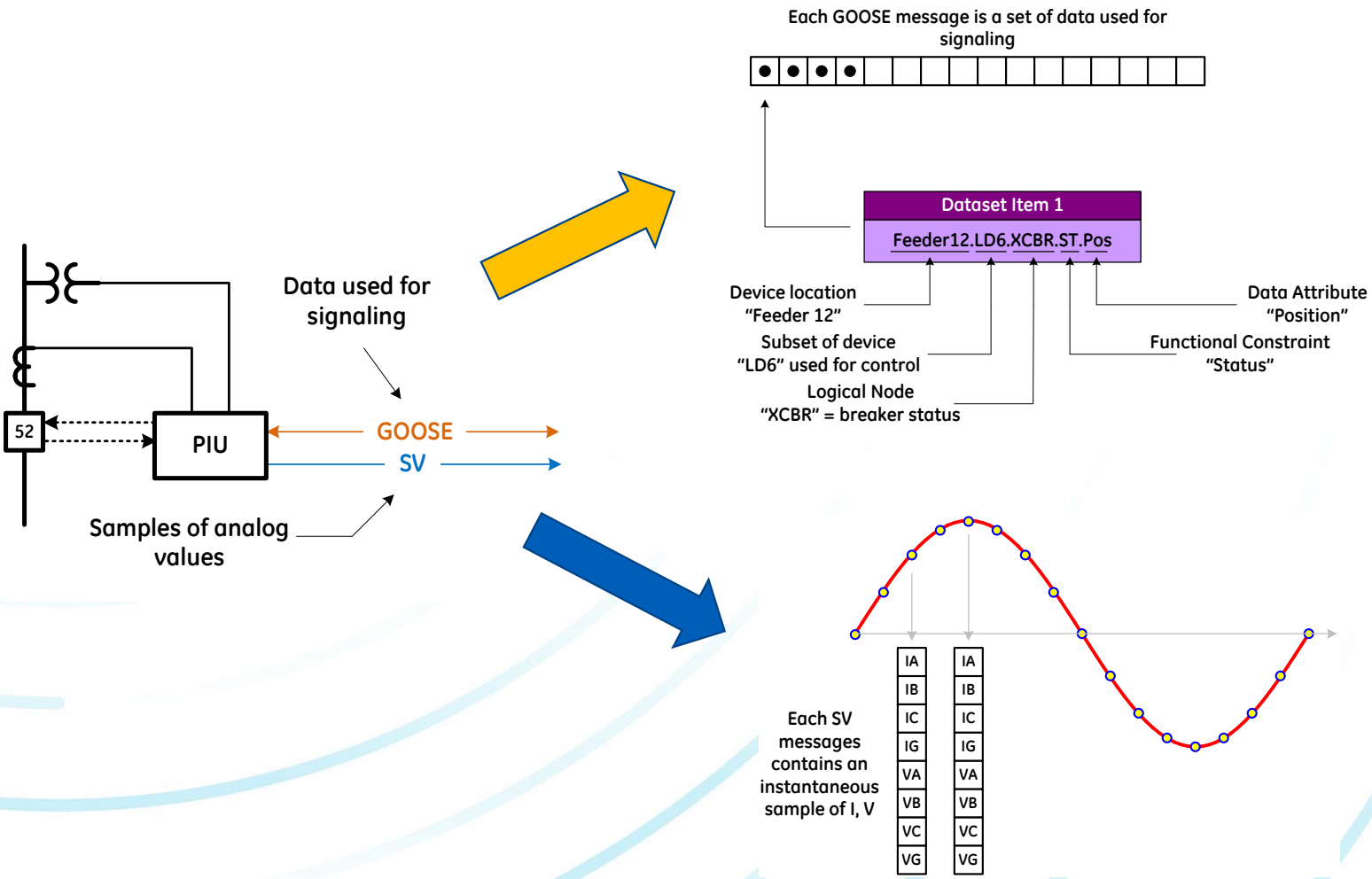

"Process Bus"

Distributed I/O for protection & control

Process bus I/O devices
simple example

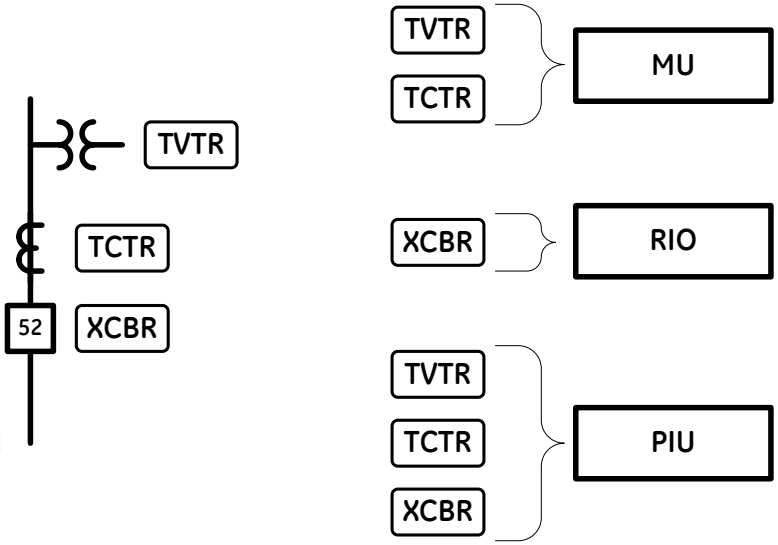

Process bus I/O devices
generically

G	Generic LN
K	Mechanical equipment
P	Protection
R	Protection Related
S	Supervision
T	Inst. Transformers
X	Switchgear
Y	Power Transformers
Z	Further equipment

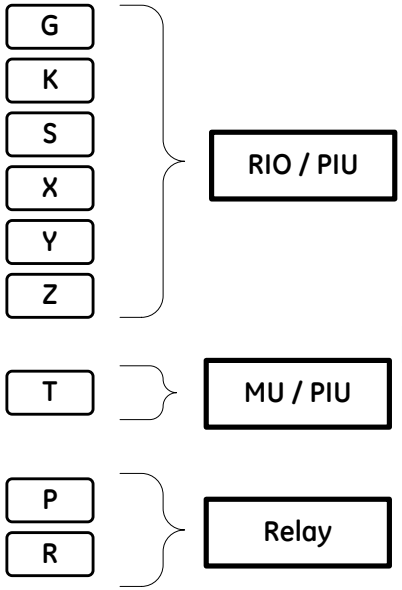

Simple process bus system

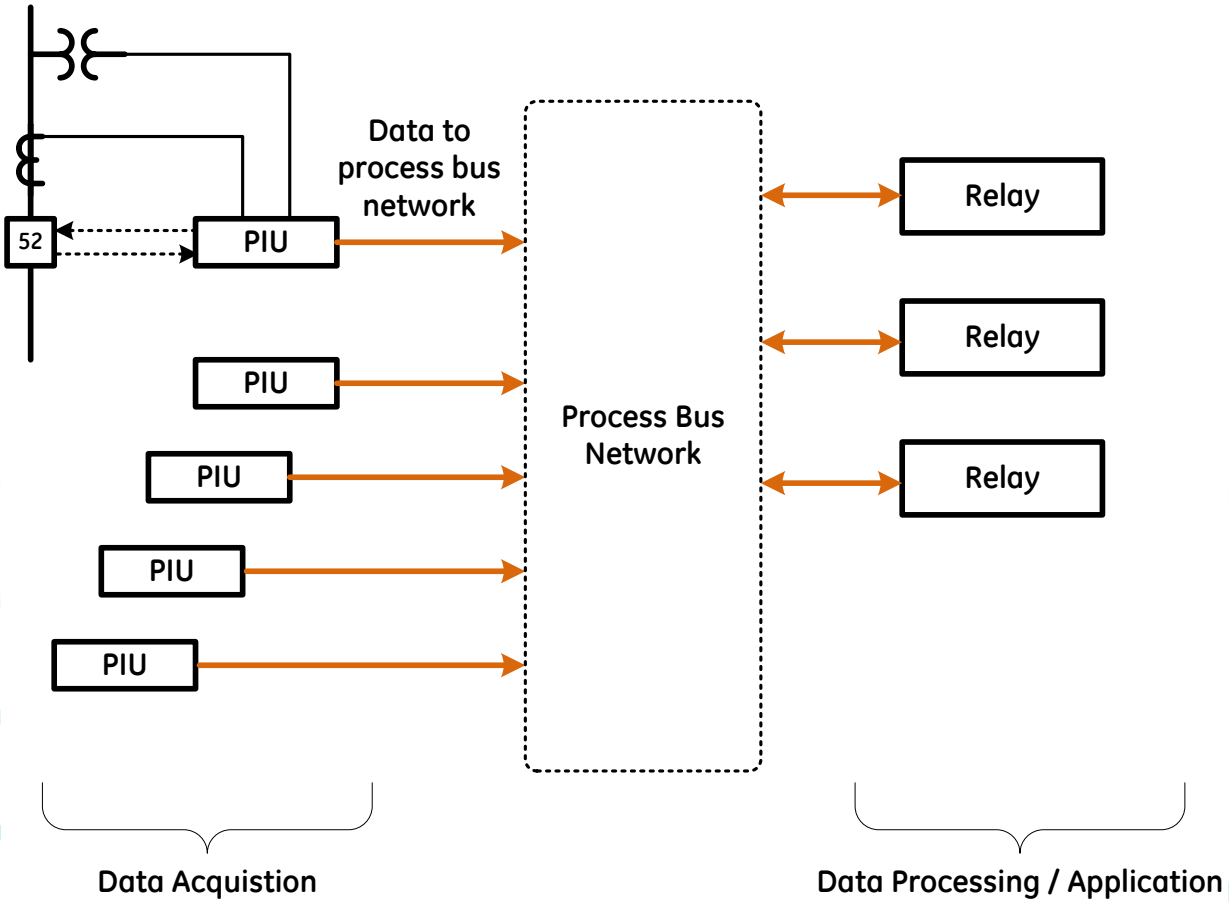

But what about recording?

Why can't I do this?

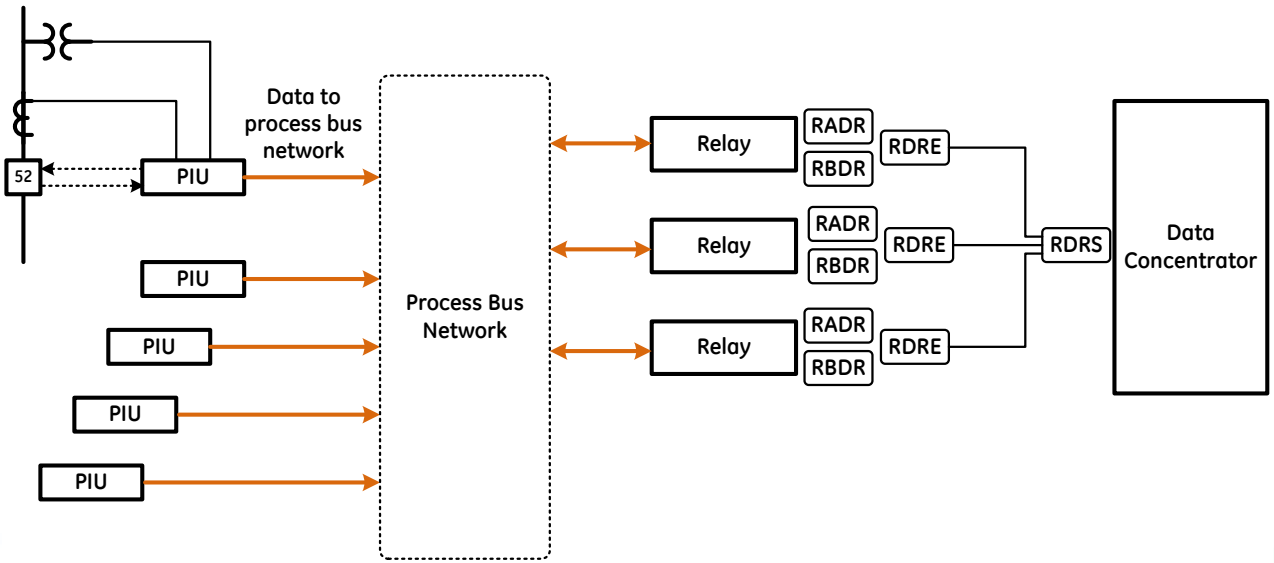

You can: this is the virtual DFR made better

- Timestamped data for record coherence
- But still limited by devices!

Dedicated DFR under 61850

61850 tells a nice story: can put function anywhere. But there are still requirements that are device dependent, not covered by 61850:

- How do you trigger?
- How long a record?
- What types of records?
- How much data storage?

So a DFR "device"

- "DFR" triggers and capabilities
- Natively coherent data
- Installation cost of $0

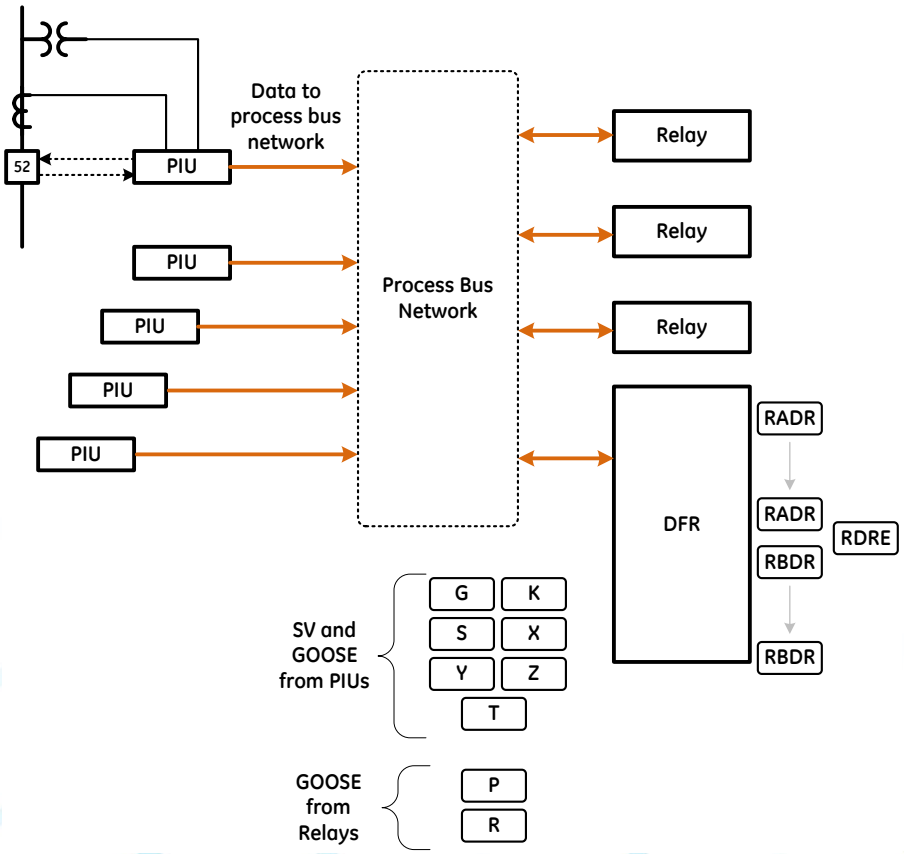

All the advantages of the Centralized DFR, w/o the cost disadvantage

Dedicated DFR Considerations

- Configuration process is:
  - *Subscribe to SV messages for analog data*
  - *Subscribe to GOOSE messages for Boolean data*
  - *Configure channel triggers against 61850 data*

But how to handle brownfield substations?

Hybrid 61850 Dedicated DFR

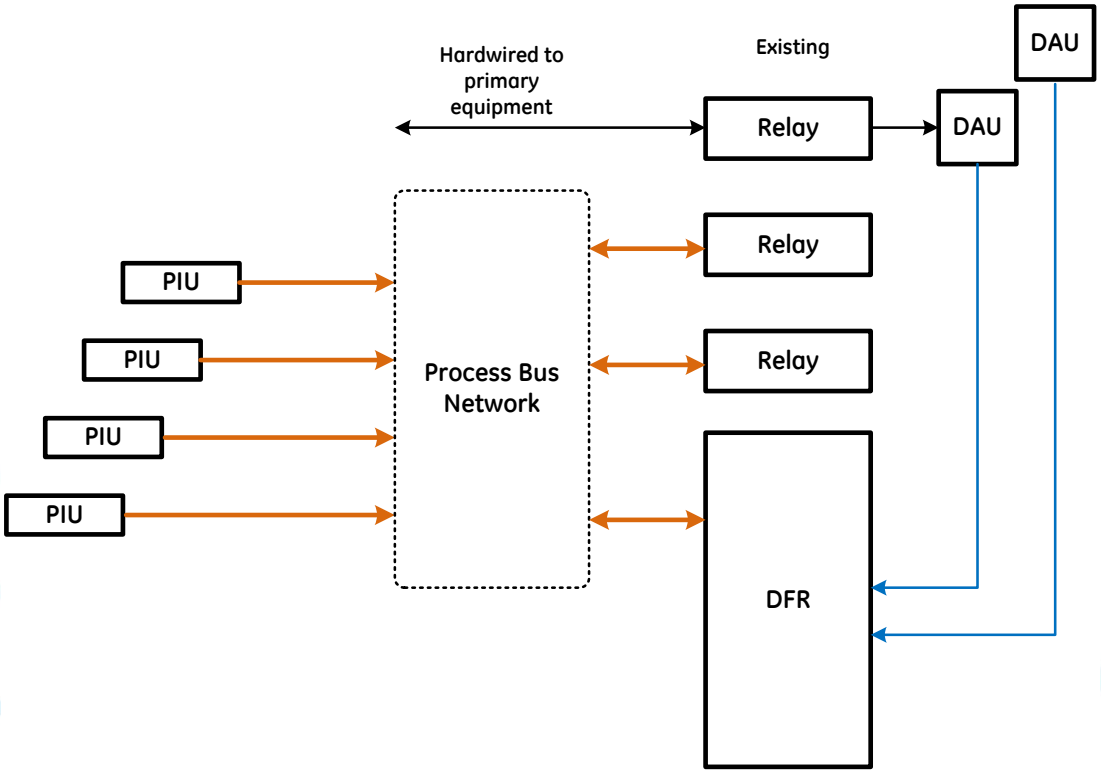

- Adding DAUs simpler than adding PIUs
- Configuration of channels should be seamless
- Time coherence of data is design challenge

Hybrid DFR: channel configuration

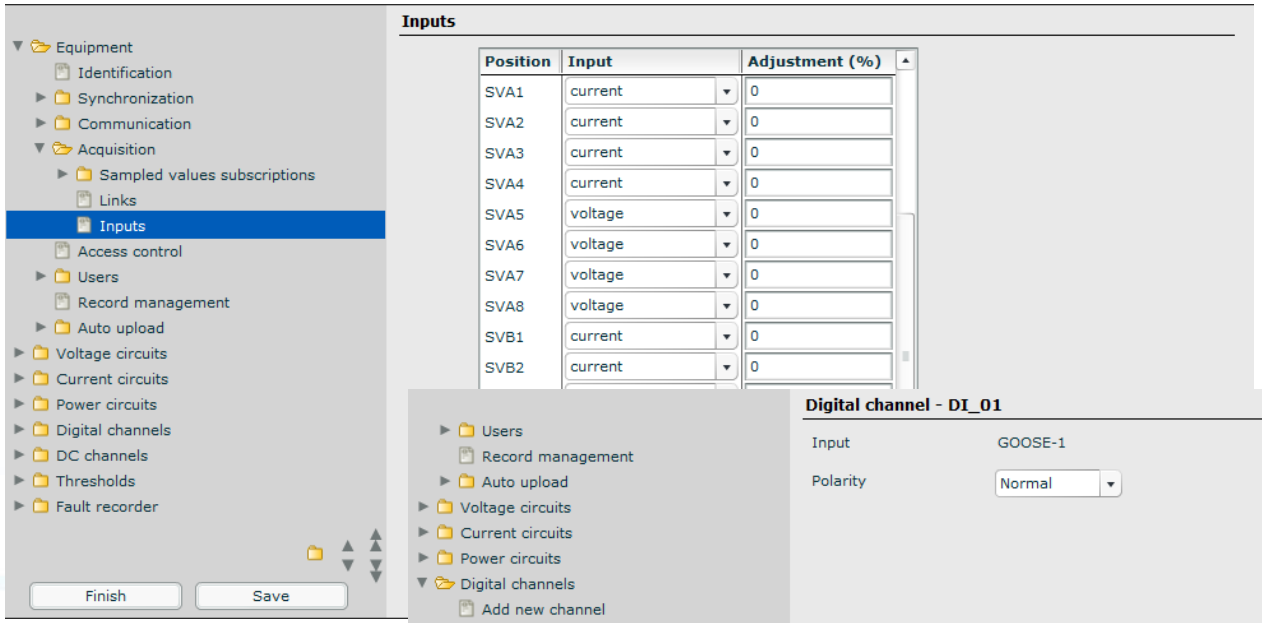

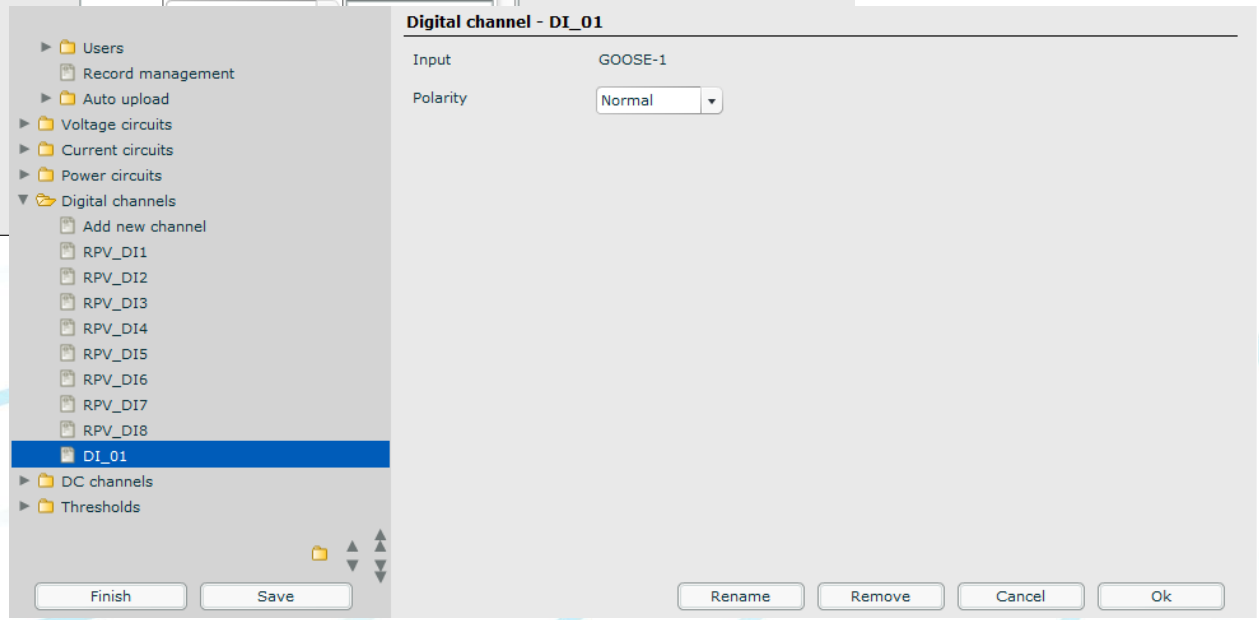

Electrosul: Palhoça Substation

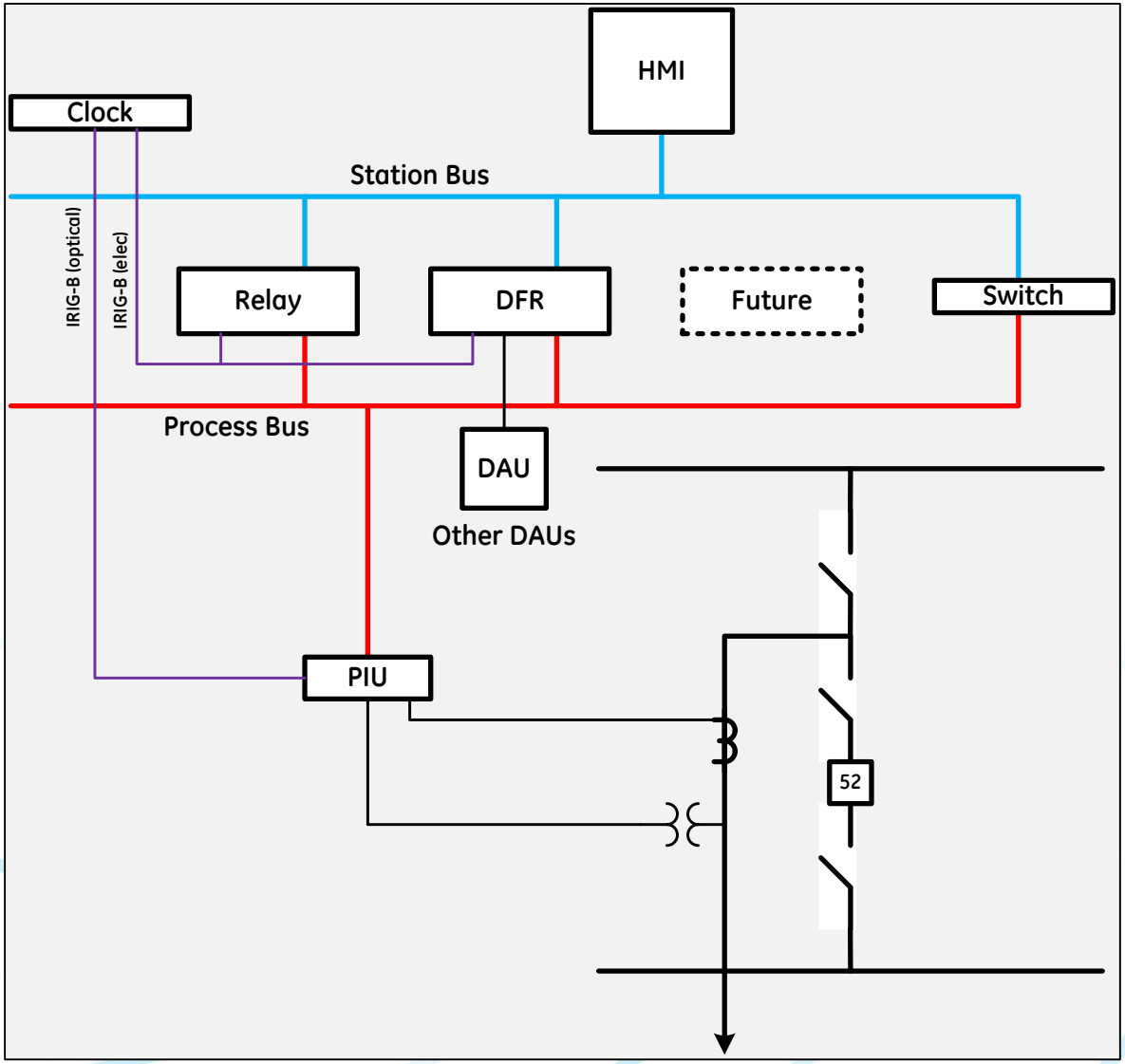

CTEEP: Embu-Guaça Substation

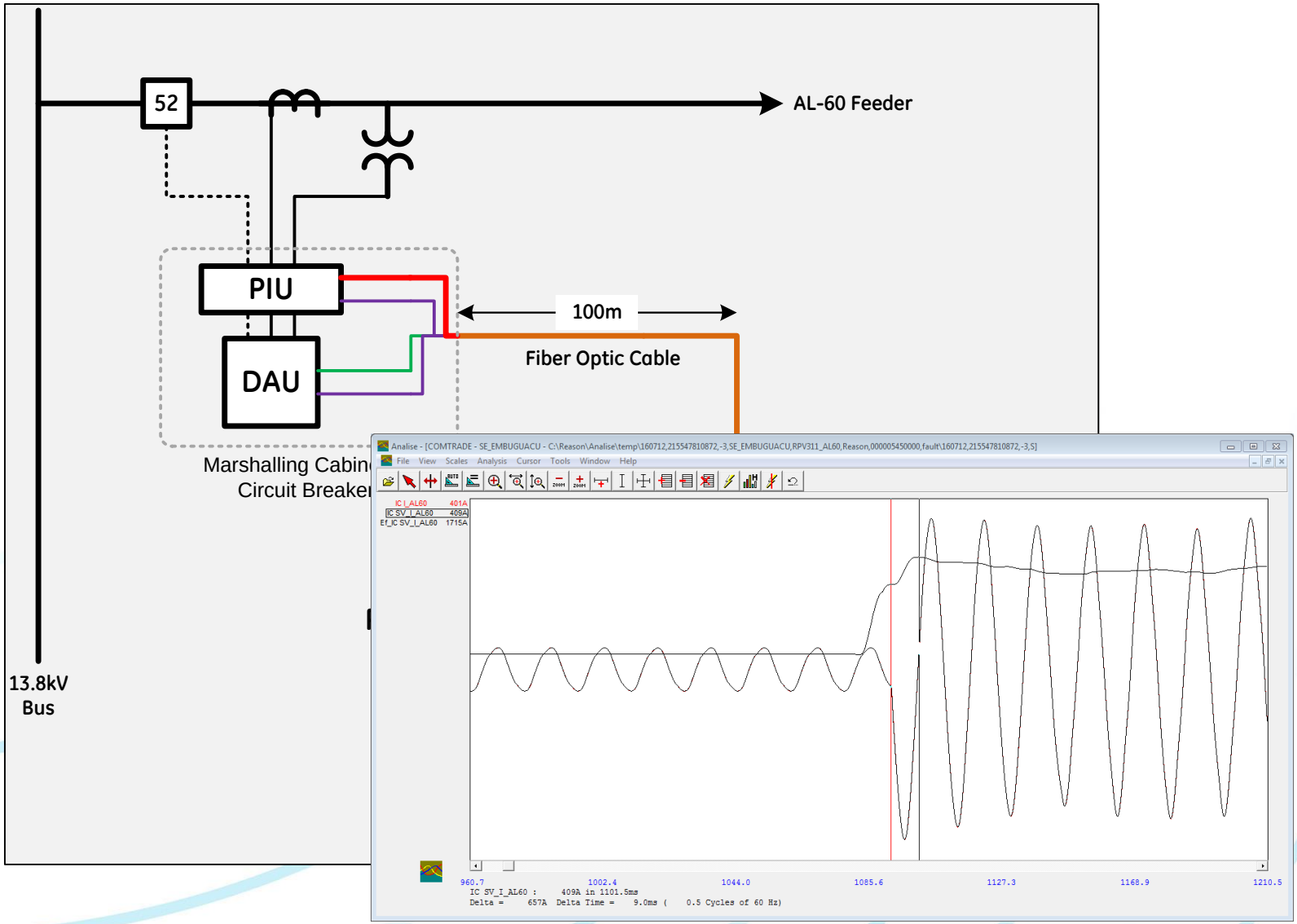

61850 Impact on other DFR apps

- Synchrophasors / PMUs

  No impact: DFR can act as PMU (or PMUs)

- Fault location

  No impact on traditional techniques

  Challenge for traveling wave fault location (TWFL)

- TWFL uses high frequency data

  Not supported by any MU, PIU

  Huge communications bandwidth requirements

  May required dedicated DAUs for short term

Conclusions

- The DFR ***application*** is necessary for the modern utility
  Capture non-operational data to analyze performance
- Utilities have moved to the "virtual DFR" due to the cost of installation of DFR ***devices***
  Quality of data vs. cost of installation
- Process bus under IEC 61850 changes these calculations
  Dedicated DFR device (or application) to provide quality data with no cost of installation.

Thank You

Questions?