Setting and Verification of Generation Protection to Meet NERC Reliability Standards

Jonathan (Xiangmin) Gao - GE Grid Solutions
Douglas Rust - Dandsco LLC
Presented by: Tom Ernst – GE Grid Solutions

2018 Texas A&M Protective Relaying Conference

NERC P&C Reliability Standards

- PRC-001: System protection coordination
- PRC-019: Coordination with voltage regulating control
- PRC-024: Generator frequency and voltage protective relay settings
- PRC-025: Generator relay loadability
- PRC-026: Relay performance during stable power swing

Protection Functions Subject to NERC PRC

Generator Protection Functions	PRC-01	PRC-019	PRC-024	PRC-025	PRC-026
Phase distance	✓			✓	✓
Phase Overcurrent	✓			✓	✓
Loss-of-field		✓			✓
Over- and Under-Frequency			✓		
Over-and Under-Voltage			✓		
Volts/Hz		✓	✓		
Out-of-Step					✓

Distance and Overcurrent Protection

- System backup protection for faults in the generator or unit transformer zone, as well as faults not cleared by the interconnection line
- Phase O/C are usually voltage restraint
- Phase distance and phase O/C are load responsive, subject to PRC-025 and PRC-026 compliance

PRC-025 Compliance

- In general, load responsive elements shall not operate for 115% of the following generator load output:
  - Real power output- 100% of the gross MW capability reported to the transmission planner
  - Reactive power output- 150% of the MW value derived from the generator nameplate MVA rating at rated power factor

PRC-025 Compliance

- The detailed requirements varies by the type of generating unit (synchronous or asynchronous)
- There are a few criteria options with different bus voltages to choose from

PRC-025 Compliance

- If the phase distance and overcurrent are directional:
  - If the direction is looking toward transmission system, detailed loadability calculations are needed
  - If the direction looking toward the generator, detailed loadability calculations are NOT necessary

PRc-026 Compliance

- Impedance element not to trip for a stable power swing
- Unstable power swing region is formed by the union of three shapes:
  - (1) an upper loss-of-synchronism (Es/Er=1.43)
  - (2) a lower loss-of-synchronism circle (Es/Er=.7)
  - (3) a lens that connects the endpoints of the total system impedance bounded

PRC-026 Compliance

- An example of the unstable power swing zone
- The distance protection is confined within the unstable power swing zone in the example

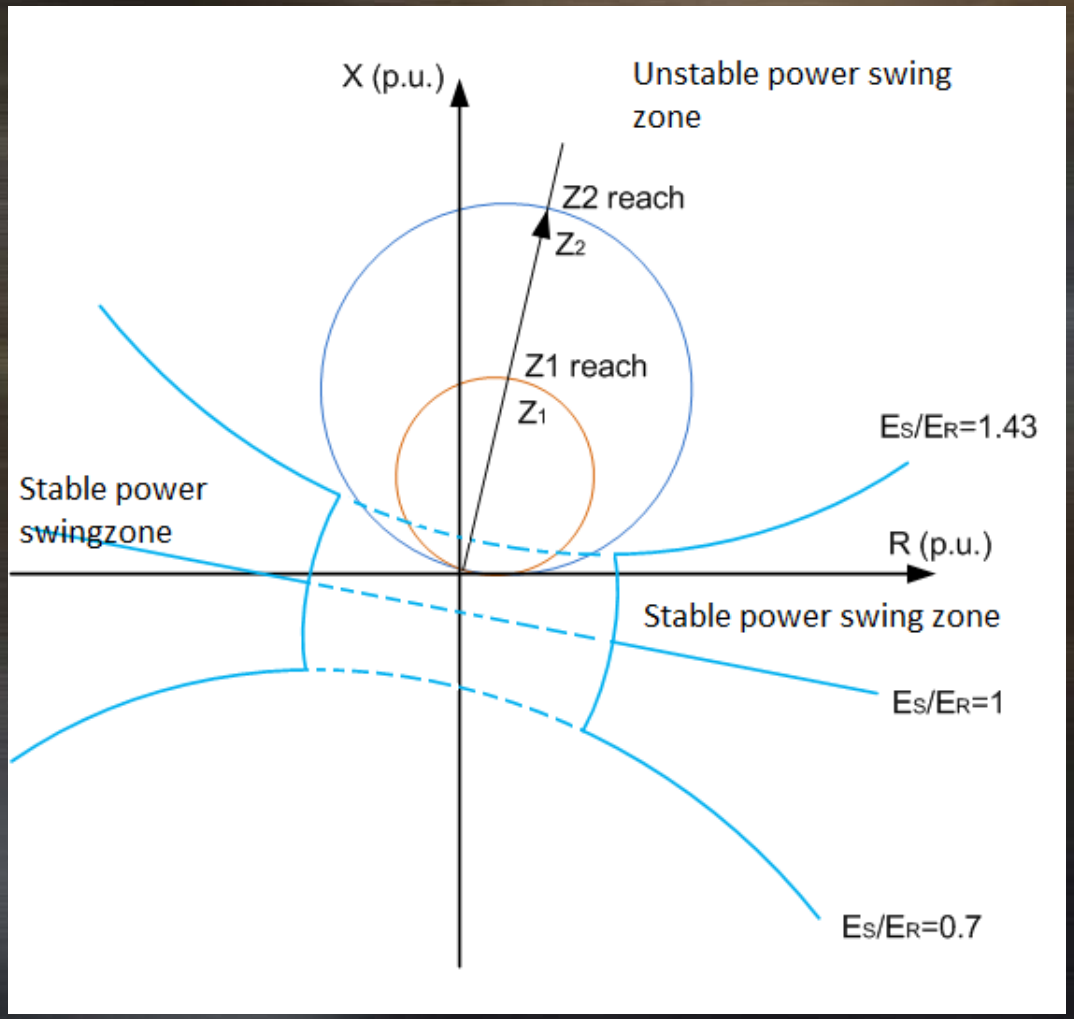

Loss of Field Protection (24)

- To detect the generator excitation is partially or completely lost
- Distance protection with two zones

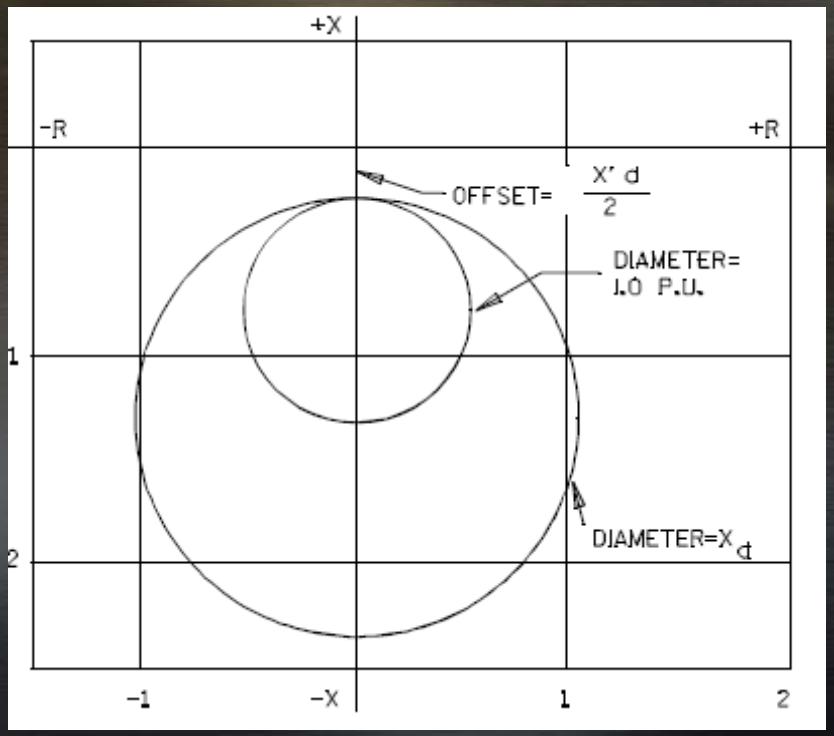

Loss of Field Protection (24)

- NERC PRC-019 compliance:
  - To coordinate with excitation system limiters, i.e. the under-excitation limiter (UEL)
  - UEL limits the minimum Q output based on generator capability and SSSL
  - LOE and UEL characteristic comparison: R-X or the P-Q graph
  - Conversion Equation $Z = \frac{(kV)^2}{MVA}$; or $MVA = \frac{(kV)^2}{Z}$

Loss of Field Protection (24)

R-X Plot

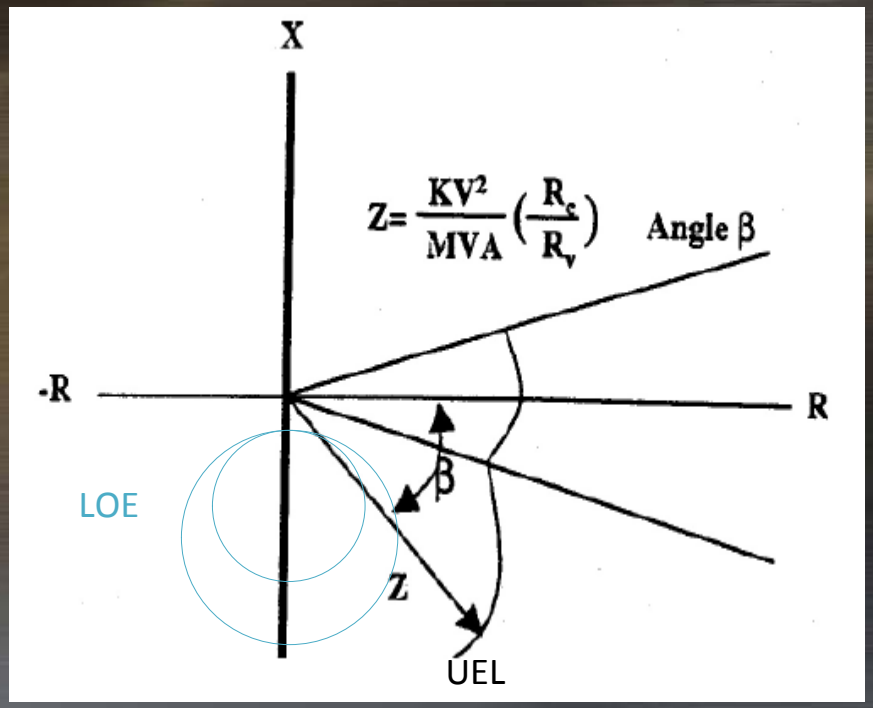

P-Q Plot

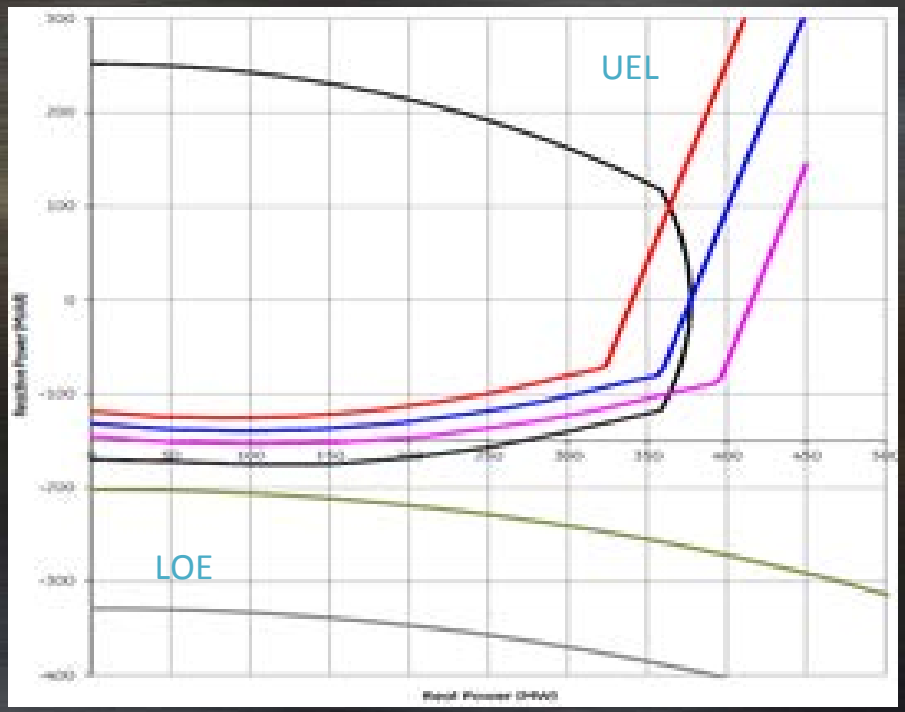

Over/Under-frequency (81)

- To protect the generator and prime mover from abnormal frequency
- Over-frequency likely to happen in load rejection
- Under-frequency likely to happen after a major disturbances in power system
- Over/under-frequency protection should be set according to equipment abnormal frequency withstand capabilities

Over/Under-frequency (81)

- The PRC-024 "no trip" zone requirement

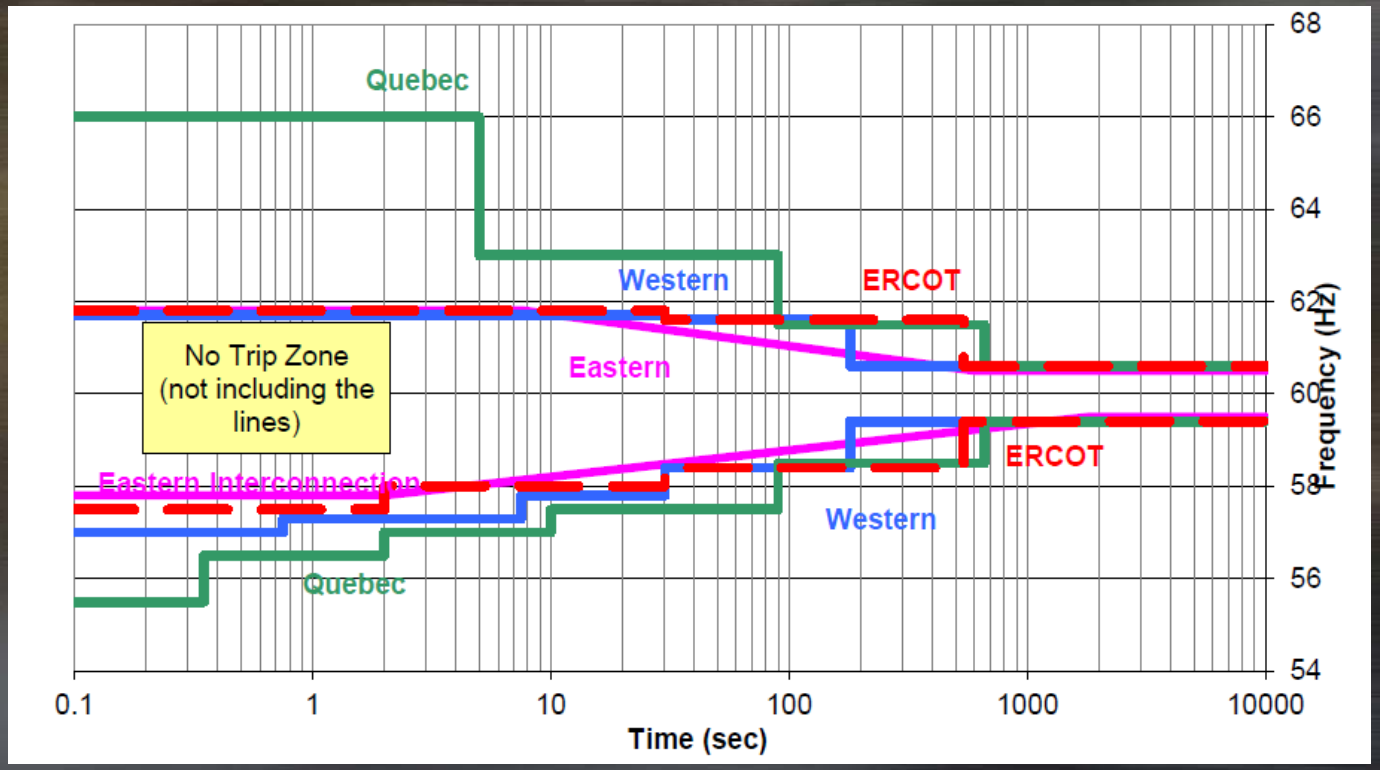

Over/Under-Voltage (59/27)

- Over-voltage:
  - Can be caused by sudden load rejection or failure of the voltage regulator
  - AVR regulates the generator voltage. Overvoltag protection is a backup function.
- Under-voltage:
  - Can be caused by delay clearing of fault on generator terminal or on the power system
  - Under-voltage protection for generator is optional
- Line-to-line voltage is monitored

Over/Under-Voltage (59/27)

- If enabled, the 59/27 functions must meet the PRC-024 voltage ride-through requirement

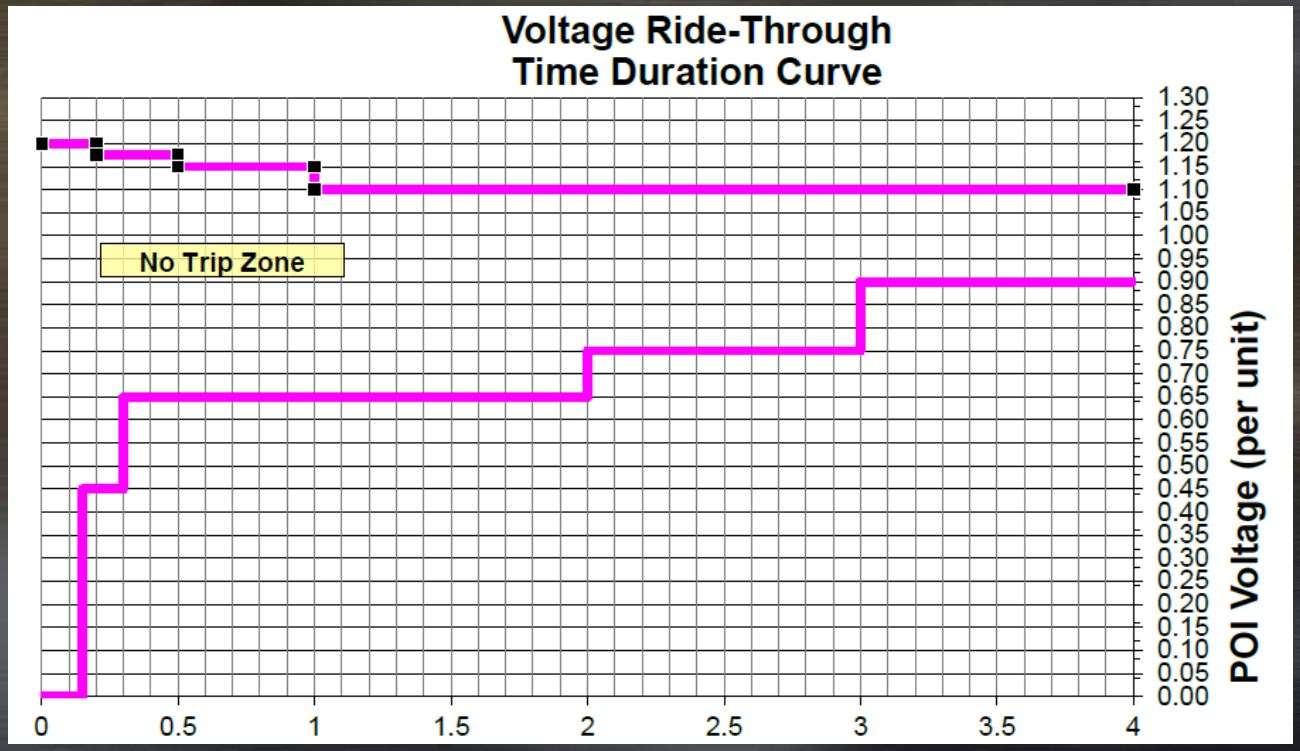

Voltage Ride Through

- The *POI (Point of Interconnection) voltage* in p.u. is "the nominal operating voltage specified by the Transmission Planner", which can be different from the GSU rated voltage
- Calculations are needed to convert the voltage base to the generator terminal voltage base to evaluate the over/under-voltage element compliance, where GSU turn ratio and voltage drop must be considered

Voltage Ride Through

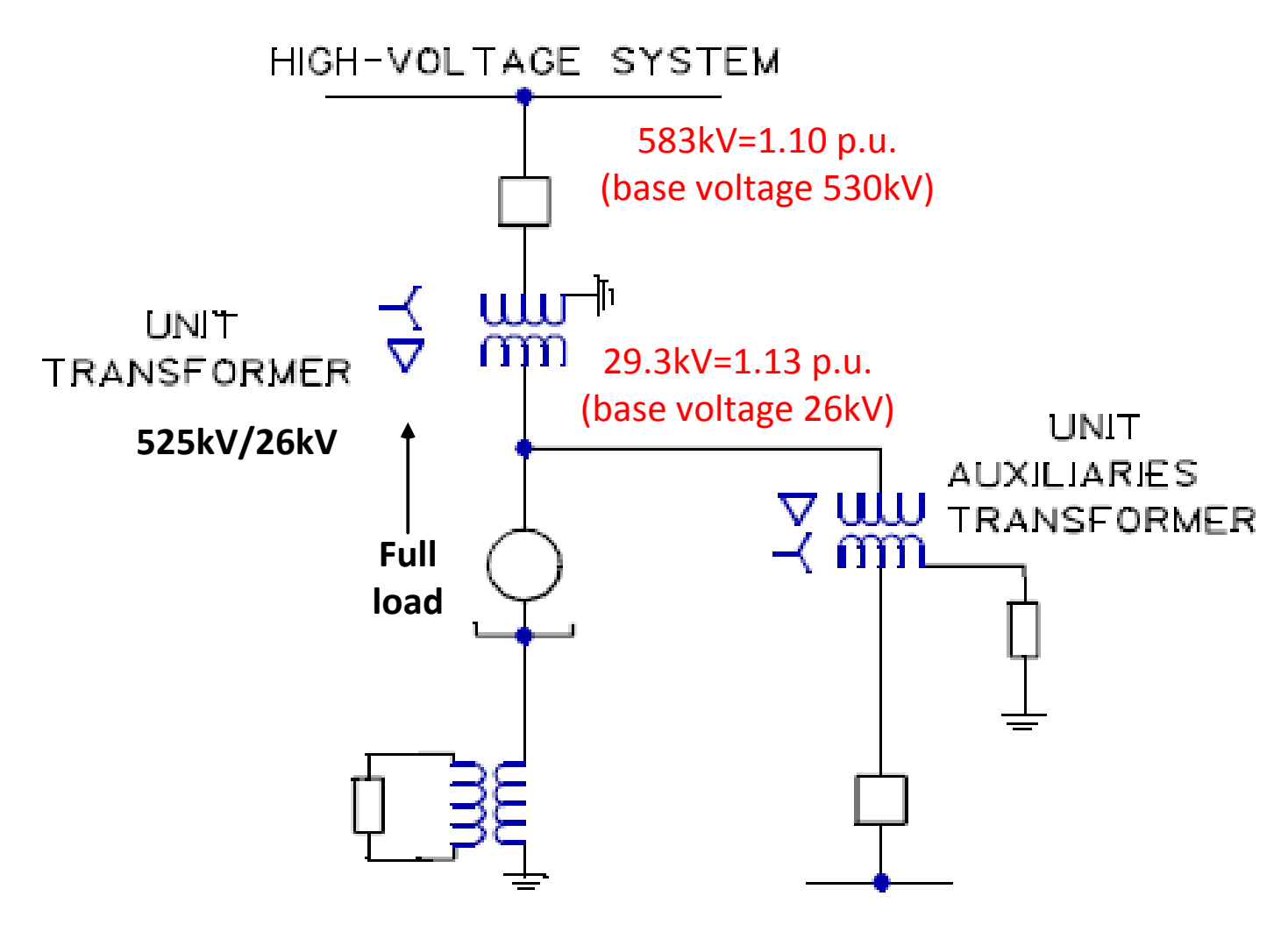

Over-excitation V/Hz Protection (24)

- To protect the generator, GSU and UAT from over-excitation
- Typically 2 levels of V/Hz elements
- Inverse curve is preferred over definite time for better fit with equipment capability

Over-excitation V/Hz Protection (24)

- PRC-019 Compliance requires V/Hz protection to coordinate with generator excitation system over-excitation limiter (OEL)
- OEL limits the excitation current, either as an overcurrent or V/Hz function, typically set at 1.05 to 1.10 p.u.
- OEL V/Hz function and protection relay V/Hz may not use the same voltage base, where conversion is required to verify the coordination

Over-excitation V/Hz Protection (24)

- Example of the V/Hz mis-coordination
- Generator terminal voltage 22.0kV, OEL V/H pickup is 1.05 p.u.
- UAT rated at 21.0/7.2kV, V/Hz protection pickup is 1.10 p.u.

UAT V/Hz pick converted to 22kV base:

$$1.10 * \frac{21.0kV}{22.0kV} = 1.05 \text{ p.u.}$$

UAT V/Hz pickup = Gen. OEL V/Hz pickup

Conclusion

- NERC PRC Standards complement the IEEE C37.102, avoiding unnecessary generator tripping
- Manually generating the NERC PRC compliance evidence is time consuming. Methods to automate and simplify the process is necessary.

Thank You

Questions?