Communications Assisted Islanding Detection

2018 Texas A&M Relay Conference

Craig Palmer
Hubbell Power Systems

Communications Assisted Anti-Islanding

Agenda

- What is a power system island?
- Islanding detection – Local
- Islanding detection – Communications Assisted
- Direct Transfer Trip & Phase Comparison Analysis
- Phase Comparison Islanding Detection Details and Critical Functionality
- Summary

What is a Power System Island?

A power system island occurs when distributed generation becomes isolated from the power system grid and continues to provide power to a portion of the grid.

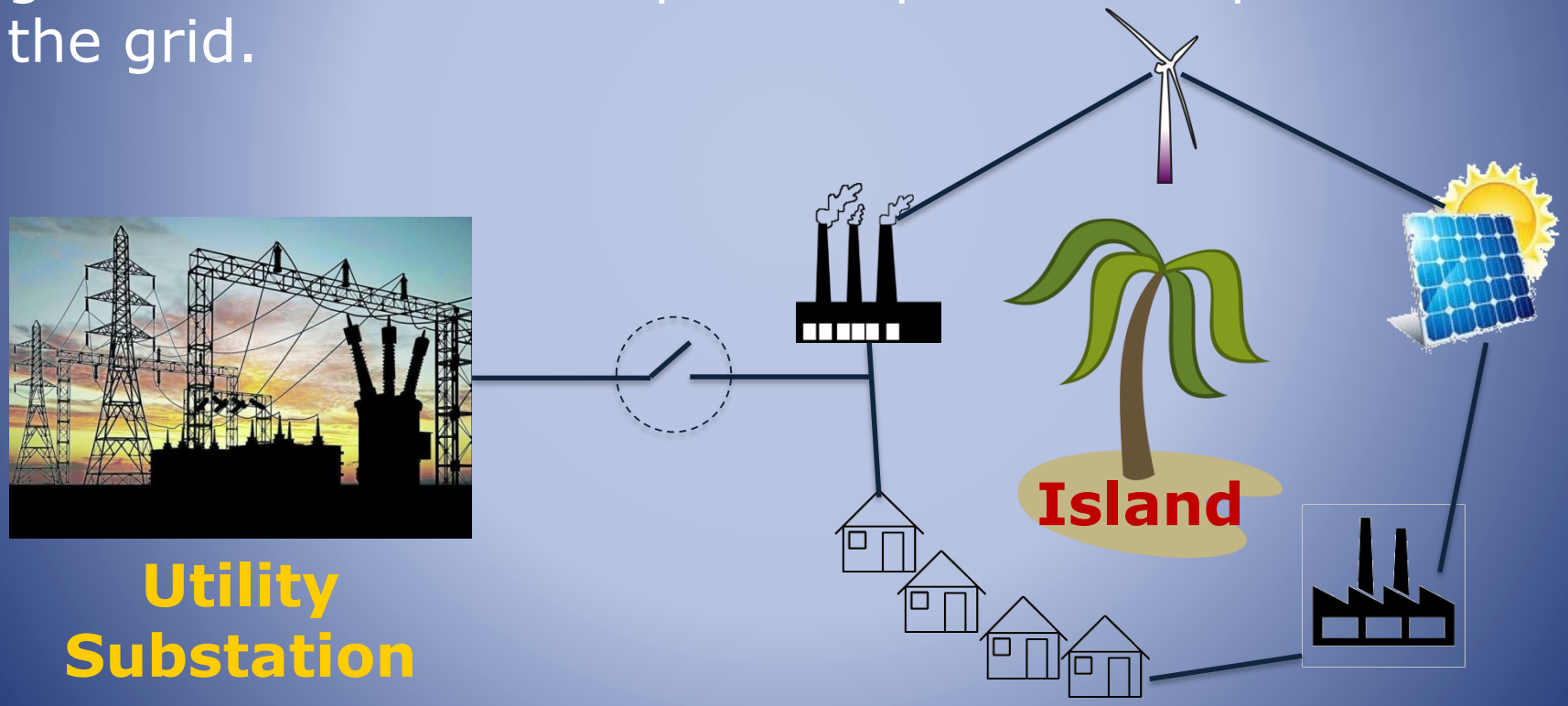

What is a Power System Island?

Intentional and Unintentional Islands

- **Intentional**
  - Where an island is desired in certain circumstances (example: micro-grids)
- **Unintentional**
  - Where an island is not desired

Unintentional islands are considered a risk to personnel safety, power quality, equipment, and reliable grid operation.

What is a Power System Island?

Unintentional islanding risks

- **Personal Safety**
  - Generator may back feed power to disconnected lines
  - Maintenance risk for utility personnel working on lines
  - Public safety risk for downed lines
- **System Coordination**
  - Reclosing into islands can cause issues and also affect coordination between inverters
- **Power Quality**
  - Power regulation may be reduced while islanded
  - Power disruptions and instability more likely
- **Equipment Damage**
  - Resulting voltage fluctuations may cause damage to utility and customer equipment

Islanding Detection - Local

Local Detection - Advantages and Disadvantages

Advantages

- Lower equipment cost
- Less maintenance

Disadvantages

- Non-detection zone (NDZ)
- Resiliency during system disturbances

Islanding Detection – Communications Assisted

Communications Assisted Methods

- **Direct Transfer Trip (DTT)**
- **Phase Comparison**

Communications assisted methods effectively eliminate the NDZ found in local methods.

As a result protection elements may be set less sensitively, reducing false operations during system disturbances.

Islanding Detection – Communications Assisted

Direct Transfer Trip (DTT)

- Uses teleprotection channel to send signal to generator to open local breaker
- Can be initiated from any device which can cause an island
  - Substation breaker
  - Recloser
  - Switch

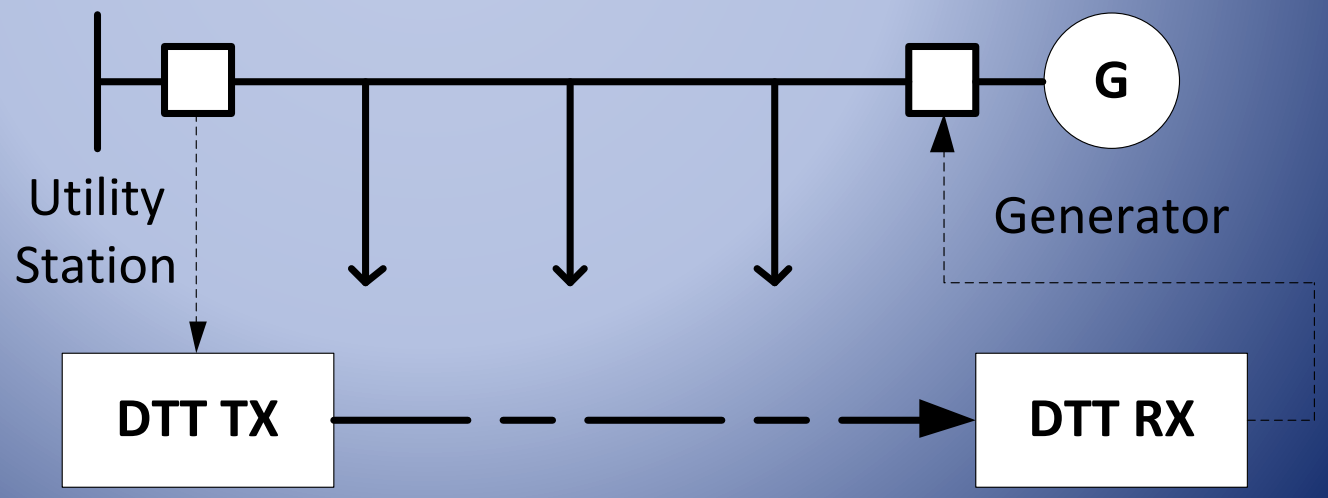

Islanding Detection – Communications Assisted

Direct Transfer Trip (DTT)

Communications Channels:

- Direct Fiber
- Digital Network (owned or leased)
- Power Line Carrier (PLC)
- Audio tone circuit (phone line)
- Wireless radio

Communications for DTT should emphasize security.

Advantages

- No NDZ given a good communications channel
- Speed
- Reduced false tripping as a result of system disturbances

Disadvantages

- Initial and/or recurring communications cost
- Requires one comms channel for each interruption device

Islanding Detection – Communications Assisted

Phase Comparison

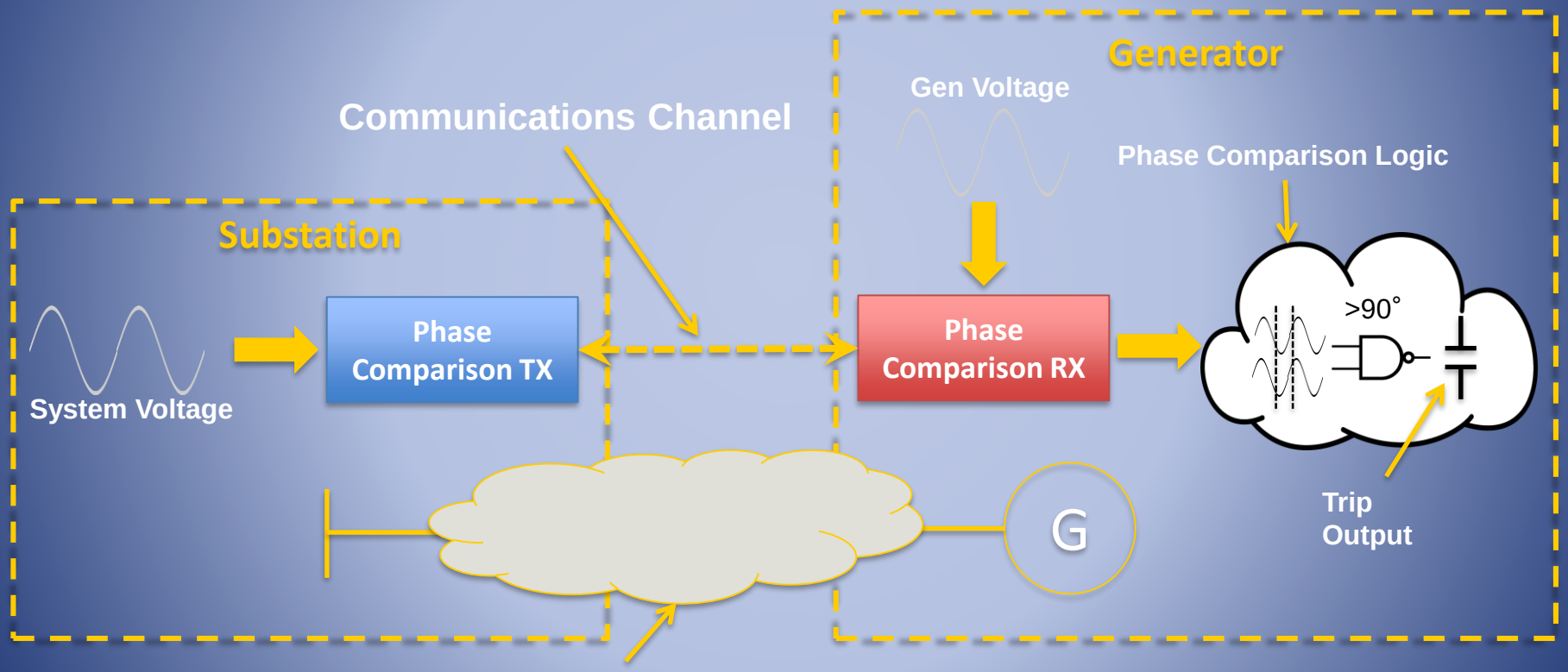

The complexity of the connection does not matter

Islanding Detection – Communications Assisted

Phase Comparison

Communications Channels:

- Direct Fiber
- Digital Network (owned or leased)
- Audio tone circuit (phone line)
- Power Line Carrier (PLC)

Communications for Phase Comparison should emphasize dependability

Advantages

- No NDZ given a good communications channel
- Simplicity when multiple line interruption sources exist
- Only one communications channel required per generator
- Reduced false tripping as a result of system disturbances

Disadvantages

- Initial and/or recurring communications cost

DTT & Phase Comparison Analysis

Distribution Line with Reclosers

Direct Transfer Trip Method

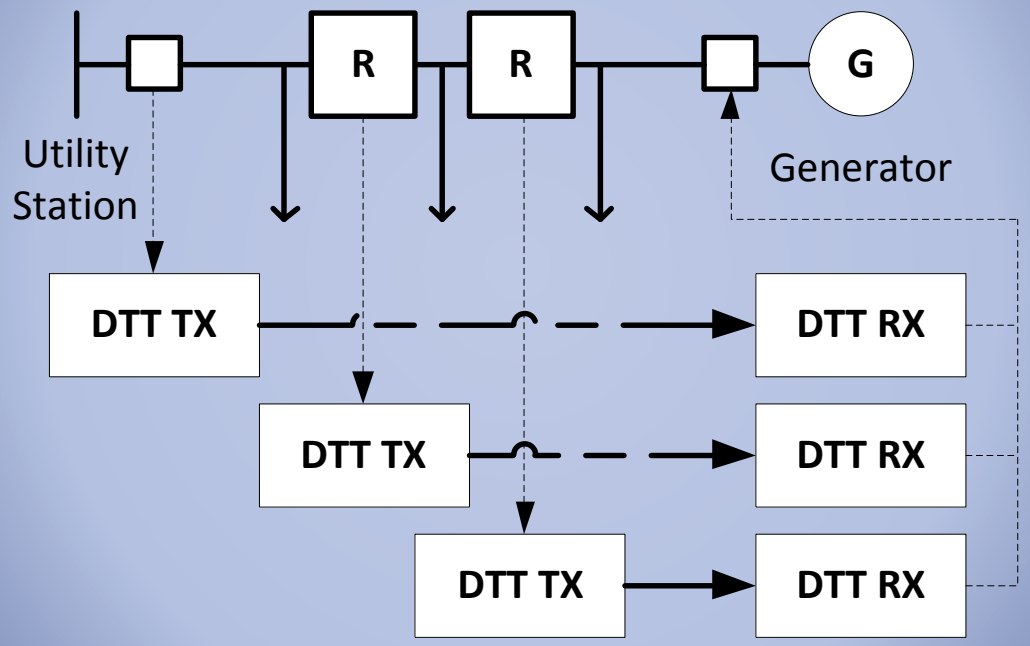

*DTT anti-islanding requires **separate** DTT **transmitters and receivers** at the Station and at each Recloser in order to trip for each islanding case*

DTT & Phase Comparison Analysis

Distribution Line with Reclosers

Phase Comparison Method

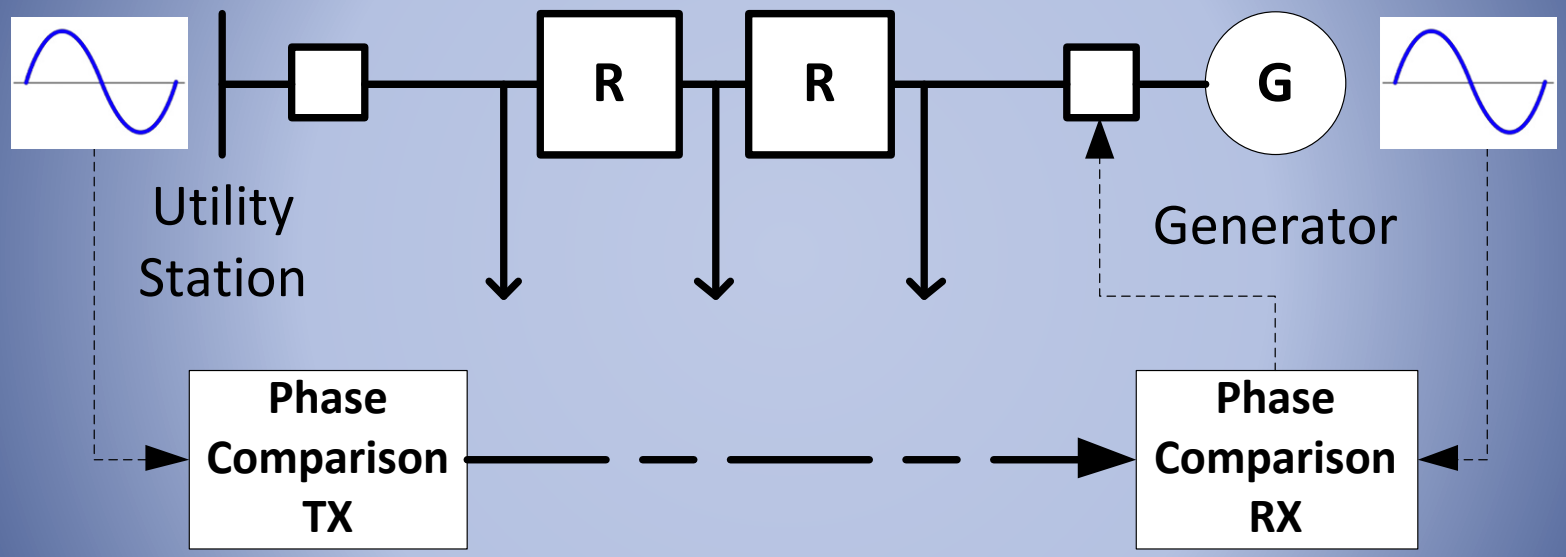

Phase Comparison anti-islanding requires ***only one comms channel*** *and* ***one transmitter / receiver pair****, regardless of the number of in-line reclosers*

DTT & Phase Comparison Analysis

Looped System Example

Direct Transfer Trip Method

Multiple comms channels and transmitter/receiver pairs *between the Generator and each Station.*

Complex logic design *to determine the island condition*

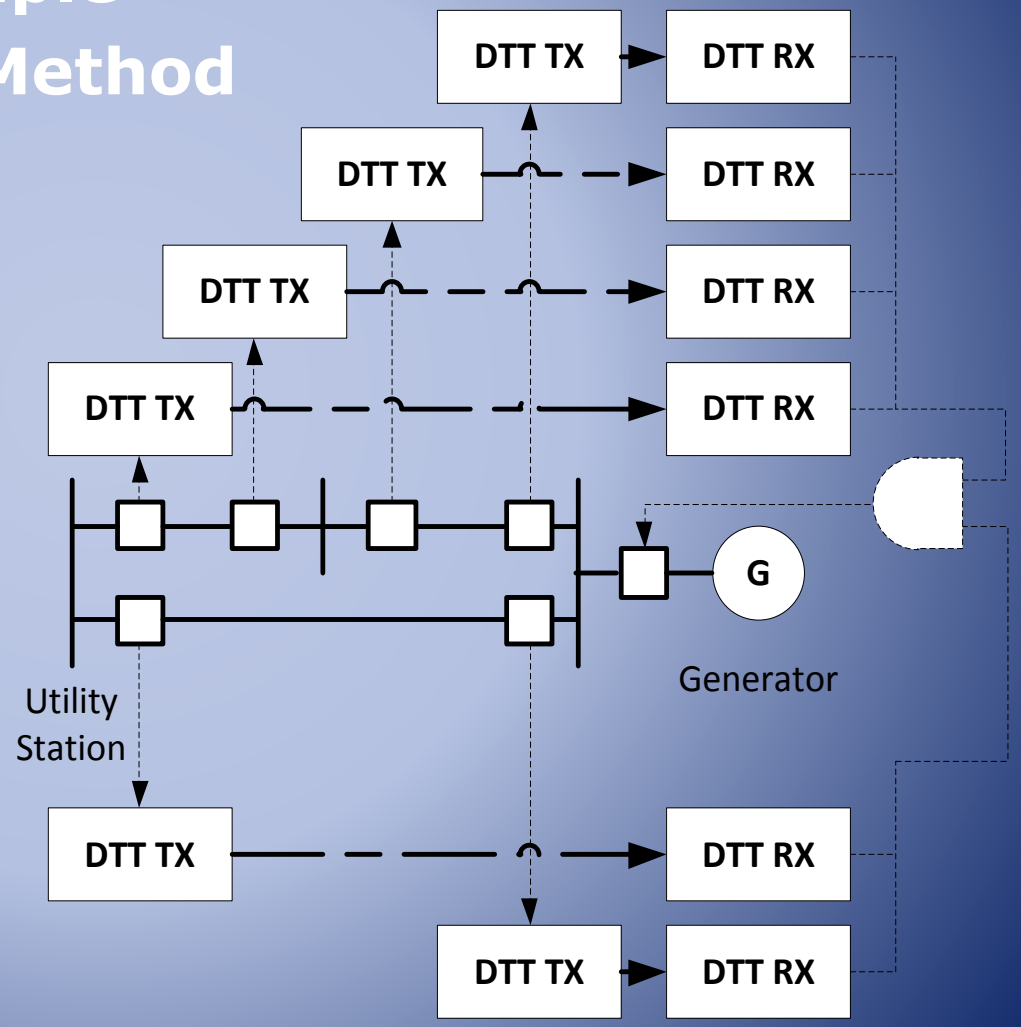

DTT & Phase Comparison Analysis

Looped System Example

Phase Comparison Method

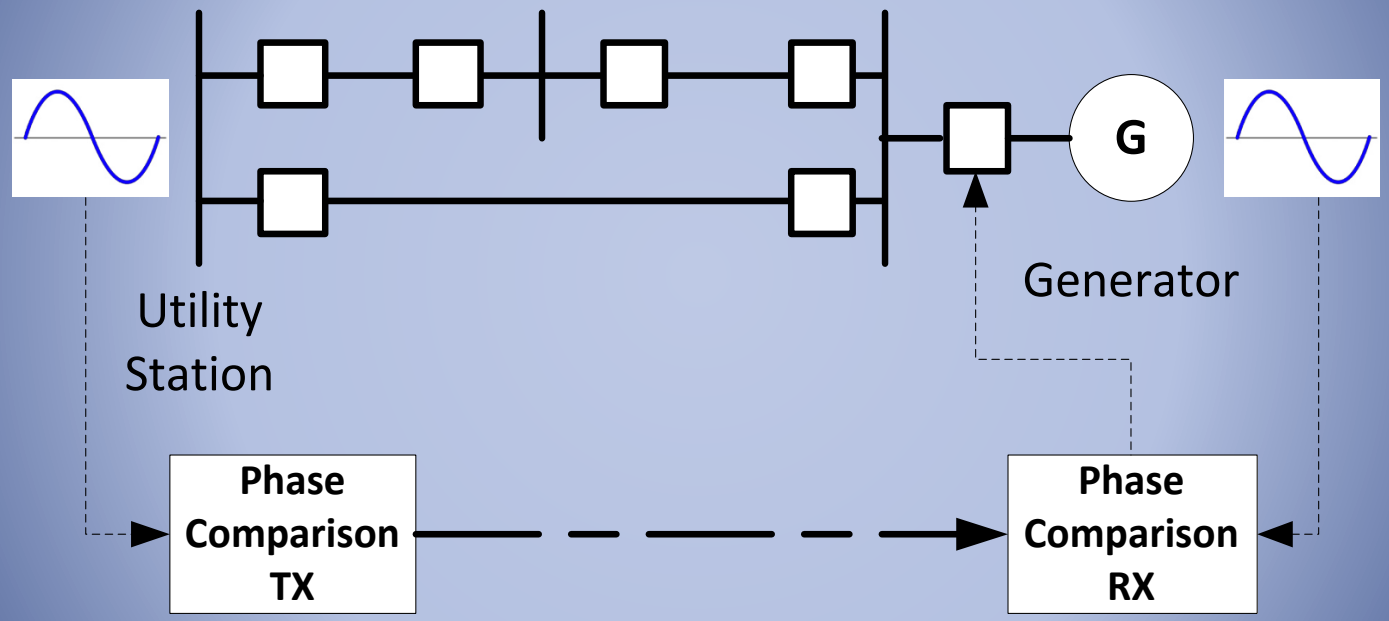

Phase Comparison anti-islanding requires ***only one comms channel*** *between the Generator and Source Station to determine the island condition, and* ***no complex logic***

Phase Comparison Islanding Detection - Details

Transmit Device

- Located at the Utility Substation
- System voltage phase input (120VAC)
- Optional DTT input for backup control

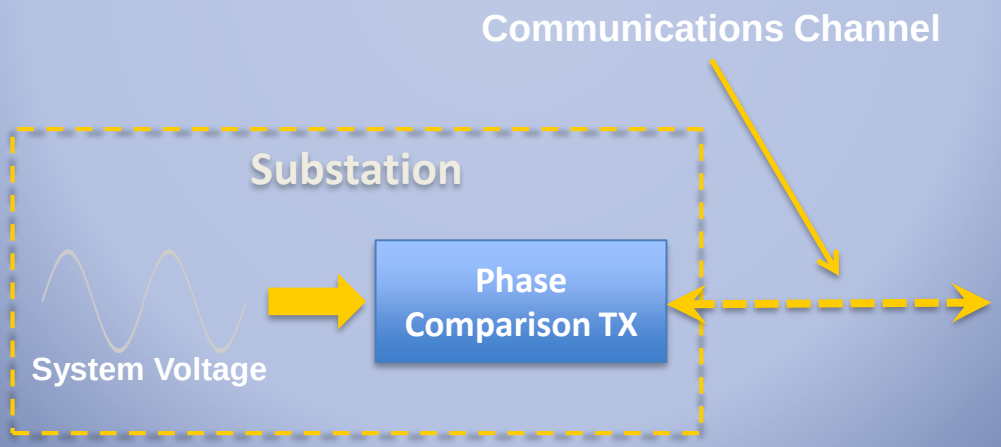

Phase Comparison Islanding Detection - Details

Receive Device

- Located at the Generator
- Receives system phase square wave
- Local voltage phase input (120VAC)
- Phase comparison logic for islanding detection
- Optional DTT output for backup control

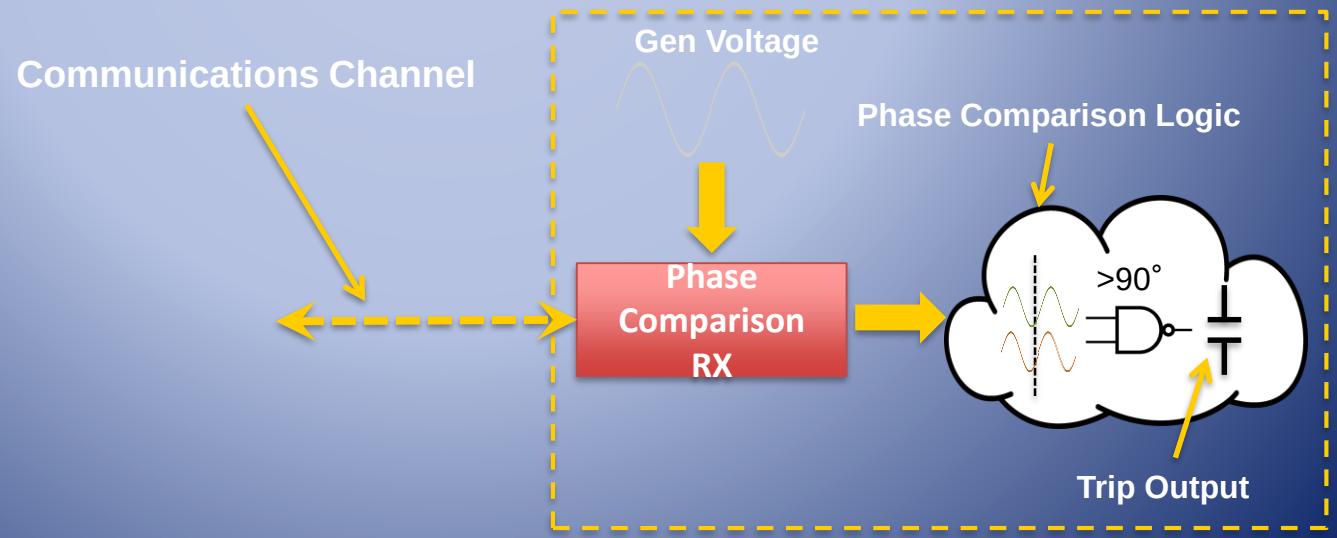

Phase Comparison Islanding Detection - Details

Receiver – Delay Compensation

- Delay inherent in communications must be compensated for
- Without compensation a fair comparison cannot be achieved

Analog Communications

- Local generator phase square wave is delayed to match received system phase
- Manual adjustment at the time of commissioning

Phase Comparison Islanding Detection - Details

Receiver – Delay Compensation

Digital Communications

- Digital circuits do not always have fixed delays as a result of circuit switching and re-routing

Dynamic Delay Compensation

- Local generator phase square wave is delayed by a fixed amount
- Active ping pong delay measurements are used to delay received system phase to match the generator phase

Phase Comparison Islanding Detection - Details

Receiver – Phase Comparison Logic

- Compares the received system phase with the local generator phase
- Negates local generator phase (180° out of phase)
  - Prevents false tripping under loss of communications
- Calculates phase difference by the amount of time in phase (coincidence)
  - Quarter of a cycle or 4.25ms for 90° (60Hz)

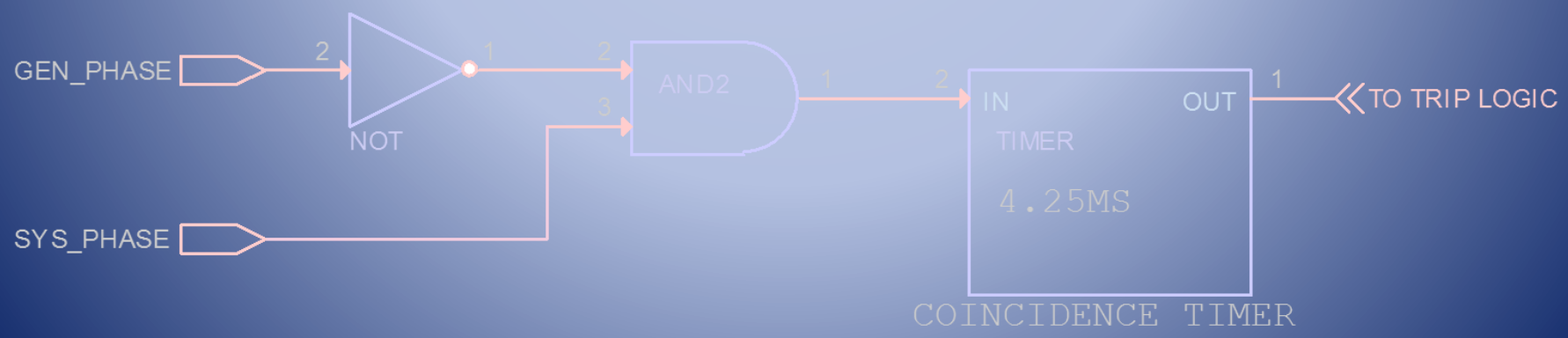

What is a Power System Island?

IEEE 1547 Recommendations

IEEE 1547 – Standard for Interconnecting Distributed Resources with Electric Power Systems, recommends that an island be detected and removed within two seconds of an occurrence

Phase Comparison Islanding Detection - Details

Receiver – Islanding Detection Time

- Detection time is a function of the difference in frequency at the time of separation and the set trip angle

$$\text{Detection time} = \frac{Set\ Trip\ Angle}{360} \times \left| \frac{1}{(Sys\ Freq - Gen\ Freq)} \right|$$

Example:

Typical set point = 90° (4.25ms)

Generator frequency sags to 59.5Hz when islanded while the system remains at 60Hz.

$$\frac{90}{360} \times \left| \frac{1}{(60 - 59.5)} \right| = \mathbf{0.5\ seconds}$$

Phase Comparison Islanding Detection - Details

Operate Time

$$\text{Detection time} = \frac{Set\ Trip\ Angle}{360} \times \left| \frac{1}{(Sys\ Freq - Gen\ Freq)} \right|$$

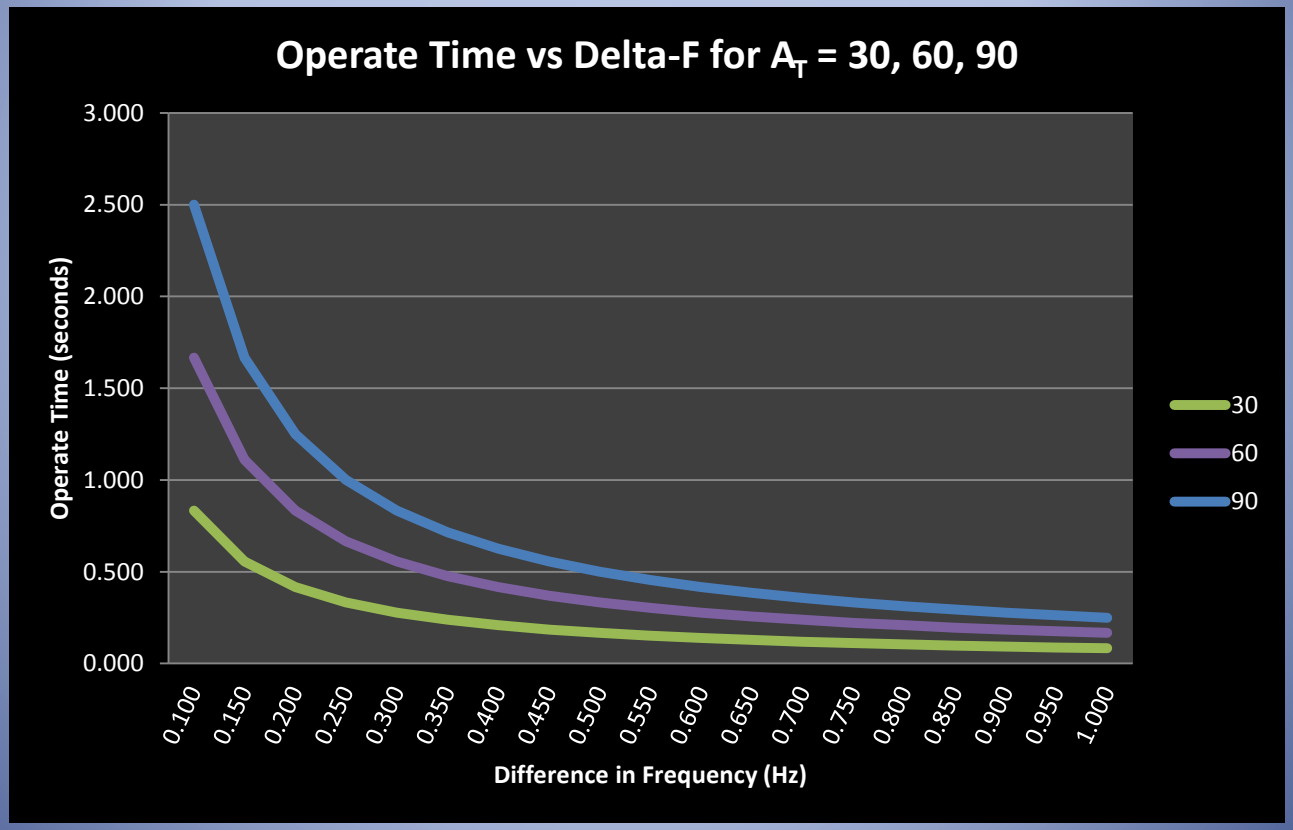

Phase Comparison Islanding Detection - Details

Operate Time

$$\frac{df}{dt} = \left| \frac{Set\ Trip\ Angle}{360*(T_{operate})^2} \right|$$

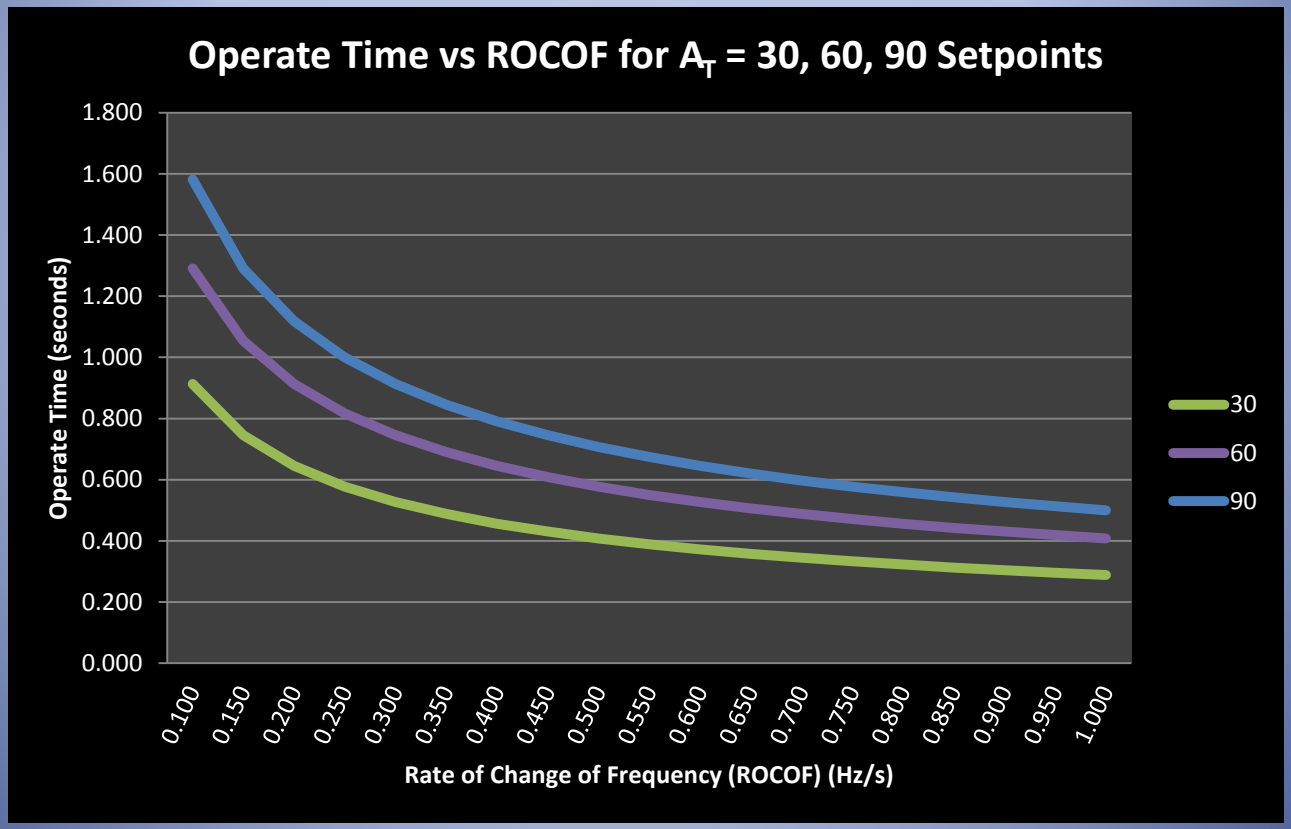

Summary

Communications Assisted Methods

- Eliminates NDZ as found with local methods
- Performance relies on the quality of the communications channel and equipment
- Performance measurements
  - Security
  - Dependability
  - Latency
- Allows passive protection to be less sensitive reducing false tripping during system disturbances

Summary

Communications Assisted Methods

Direct Transfer Trip (DTT)

- Trip signal initiated by interruption/switching devices
- Requires one communications channel for each interruption device

Phase Comparison

- Substation voltage phase information sent to the generator for comparison with the generator phase
- Generator is tripped when phase difference reaches a preset level
- Requires only one communications link per generator
- Requires no complex DTT logic as a result of in-line reclosers, switches or multi-line connections

Q & A