Teleprotection with MPLS Ethernet Communications - Development and Testing of Practical Installations

Tariq Rahman and James Moralez, San Diego Gas & Electric Company
Solveig Ward and Eric A. Udren, Quanta Technology, LLC
Michael Bryson and Kamal Garg, Schweitzer Engineering Laboratories, Inc.

Presented at
Texas A&M Conference for Protective Relay Engineers
College Station, TX
March 28, 2018

Background

San Diego Gas & Electric System

- Provides natural gas and electricity to San Diego County and southern Orange County in southwestern California to 3.6 million consumers
- 1.4 million electric meters and 873,000 natural gas meters in a service area that spans 4,100 square miles
- Currently, SDG&E uses TDM network for teleprotection and SCADA
- The TDM network consists of a mix of direct fiber, T1 multiplexers on TDM SONET, microwave radio, leased-line, and channel bank equipment

Introduction

- Technology evolution is driving towards Ethernet communications - converged utility communications network
- Typically, packet based IP routing in an Ethernet WAN had been fundamentally less predictable than the deterministic point to point TDM or serial data communications circuits
- Teleprotection is migrating from SONET to MPLS Ethernet
- To validate the design and in preparation for substation field installations within the SDG&E system, laboratory testing was performed using a Real Time Digital Simulator or RTDS® system model
- Test MPLS routers & network configurations were applied to protective relays at the SDG&E Integrated Test Facility (ITF)

Utility Communications Services

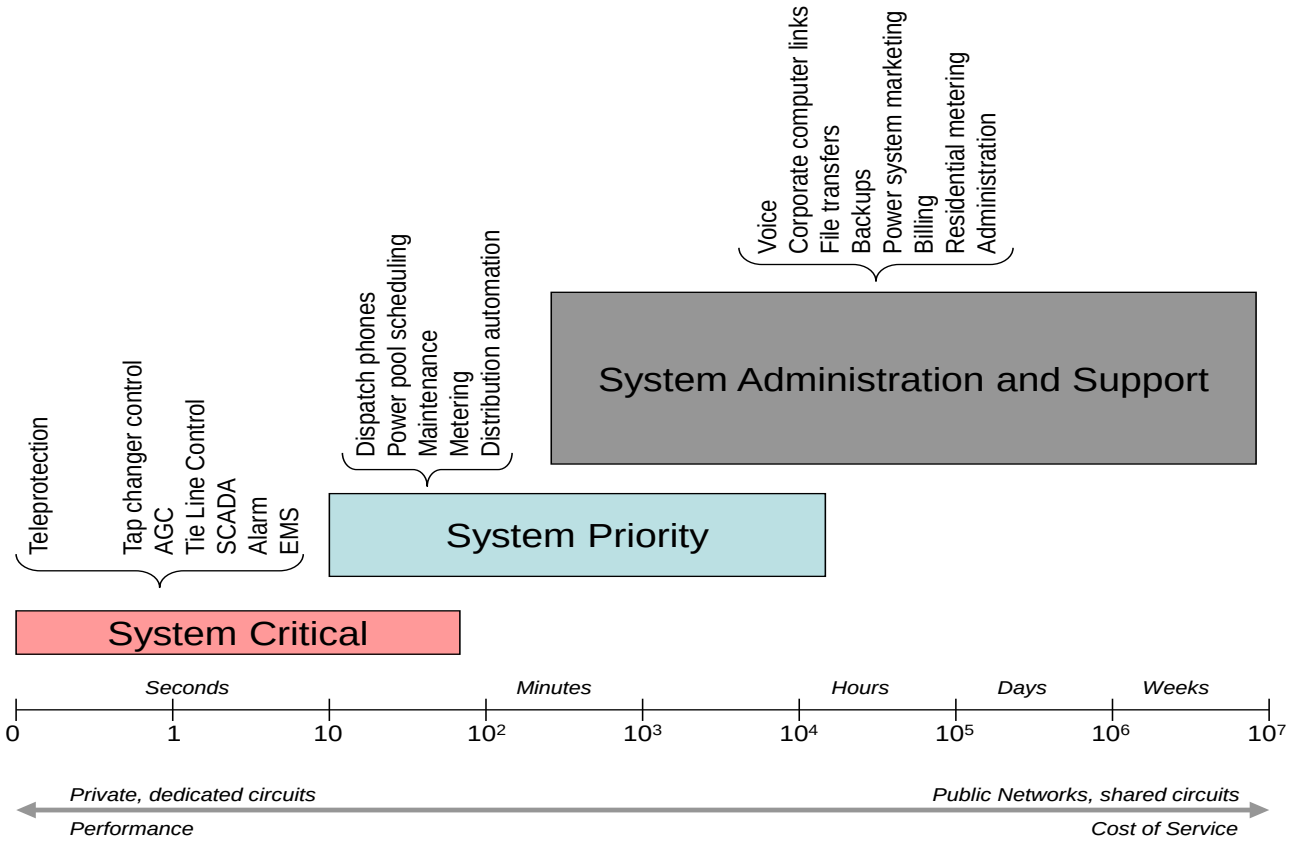

SONET Characteristics

- Point-to-point connection
- Deterministic and low latency (1 – 3 ms)
- Equal transmit and receive delay (no asymmetry)
- Ring redundancy
- Substation multiplexer fail-over as low as 2 - 3 ms

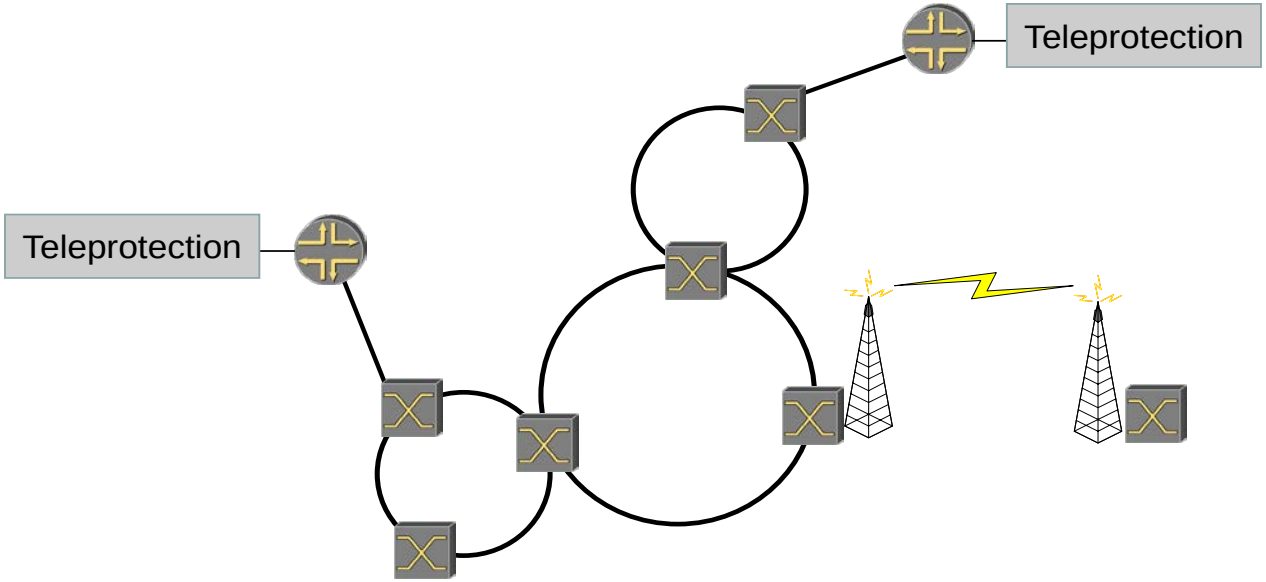

Ethernet IP Characteristics

- Ethernet is based on IEEE 802.3 standard with various versions supporting higher data rates and lower latency
- Widely adopted packet-based technology
- Non-deterministic latency
- Basis for IEC 61850 P&C

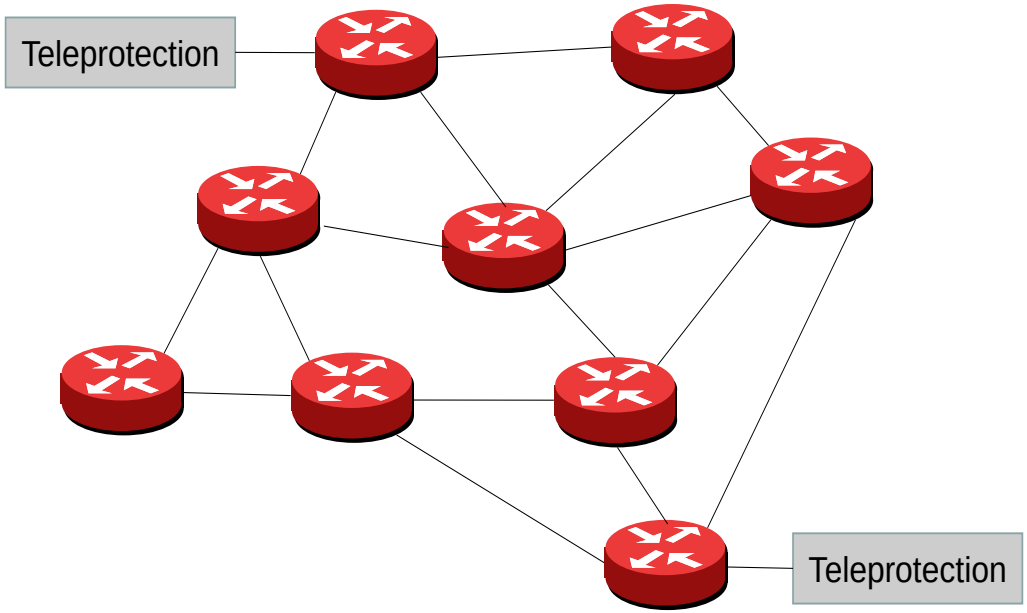

MPLS Characteristics

- MultiProtocol Label Switching – packet label field routes Ethernet packets among MPLS routers
- Dynamic and static routing available
- Predictable latency
- Pseudowire services to support TDM/Serial communications
- Low latency enabled by using a static pre-defined path, and the use of small jitter (data) buffers for teleprotection traffic
- High priority provisioning through the use of Quality of Service (QoS) configuration
- MPLS ensures minimal asymmetry by routing transmit and receive packets over static paths via the same network nodes
- Path fail-over times 50 - 300 ms
  - Mitigated by using redundant teleprotection channels in the relay with 0 – 2 ms fail-over time

SDG&E MPLS Project Drivers

- MPLS is the current communications transport standard being widely adopted in other Industrial Control Systems (ICS) environments such as water, public safety networks, land mobile radio backhaul, etc.
- As MPLS is adopted into substation communications - replacing instead of upgrading older technology - it is expected to deliver significant benefits to overall utility communications, with higher service availability
- Provides a reduction in maintenance costs (O&M) as utility operates a single communications system
- Provides comprehensive network monitoring and network diagnostics

Project Development

SDG&E Methodology

- Development of business requirements based on internal and external drivers
- Development of in-depth technical requirements, and requirements traceability matrix
- Assuming a successful field trial testing period, the migration of teleprotection will commence as MPLS network service is migrated to substations
- Creation of an MPLS network lab testing environment
- Implementation and testing of channel monitoring functions
- Installation of transmission line field test relays and monitoring for a period of 12 months
- RTDS lab testing of teleprotection over MPLS

RTDS Model

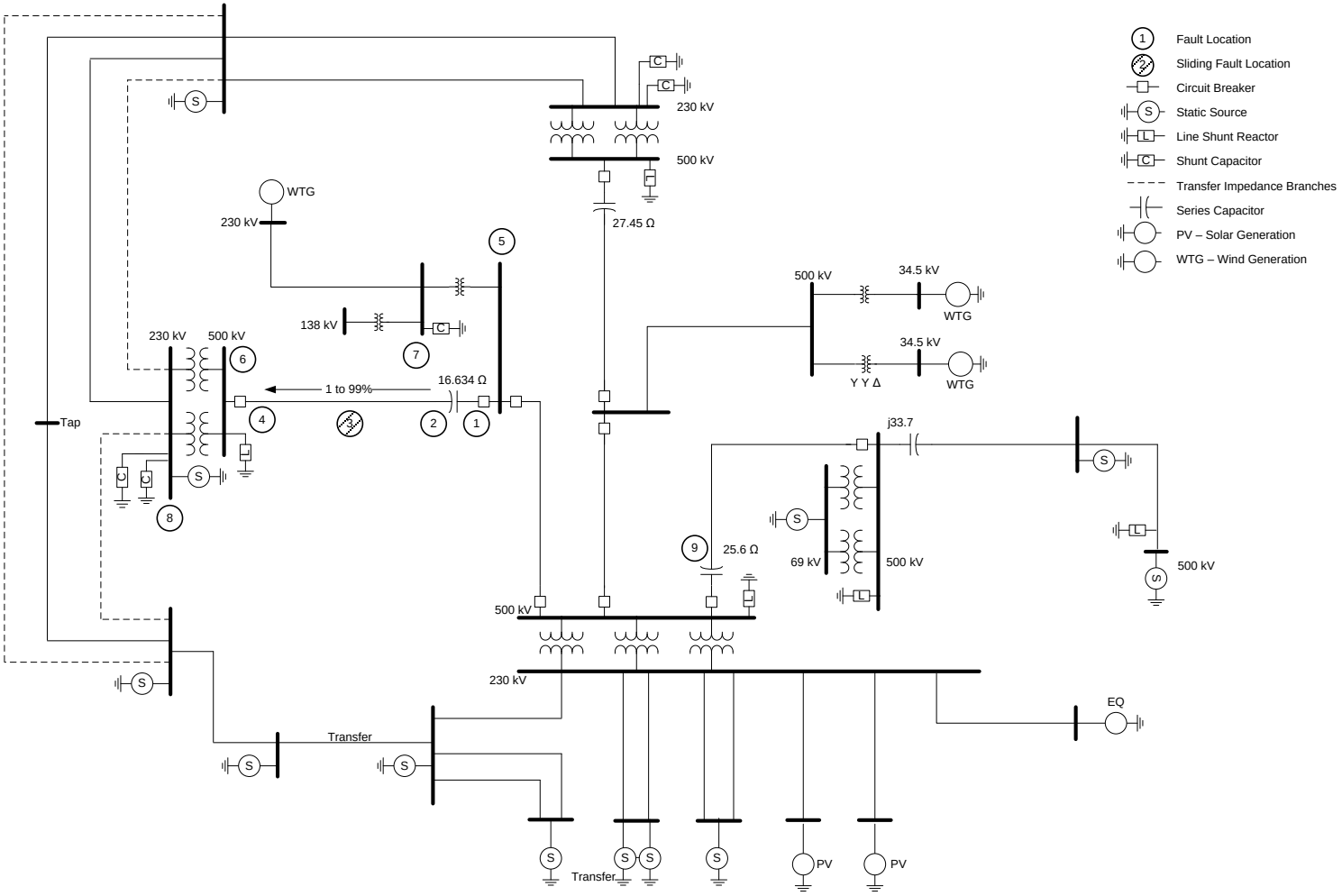
Fault Location
Sliding Fault Location
Circuit Breaker
Static Source
Line Shunt Reactor
Shunt Capacitor
Transfer Impedance Branches
Series Capacitor
PV – Solar Generation
WTG – Wind Generation
230 kV
500 kV
27.45 Ω
WTG
230 kV
138 kV
230 kV
500 kV
1 to 99%
16.634 Ω
Tap
500 kV
34.5 kV
WTG
34.5 kV
Y Y Δ
WTG
j33.7
69 kV
500 kV
25.6 Ω
500 kV
500 kV
230 kV
EQ
Transfer
Transfer
PV
PV

Test Requirements and Test Setup

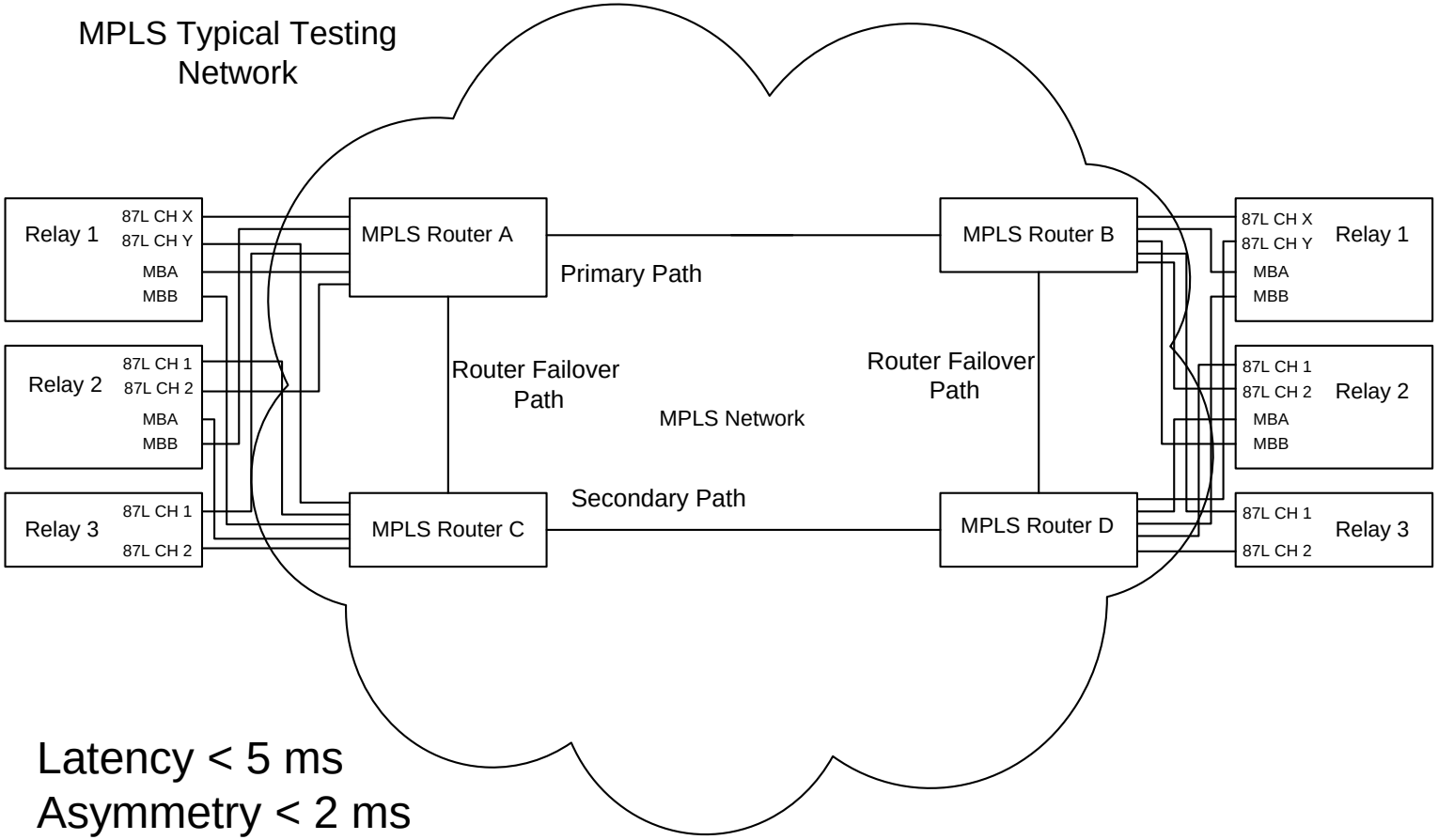

1. Latency < 5 ms
2. Asymmetry < 2 ms
3. Failover < 3 ms
4. Availability > 99.95%

Asymmetry < 2 ms

- 87L with channel based synchronization uses the loop delay divided by 2 for alignment

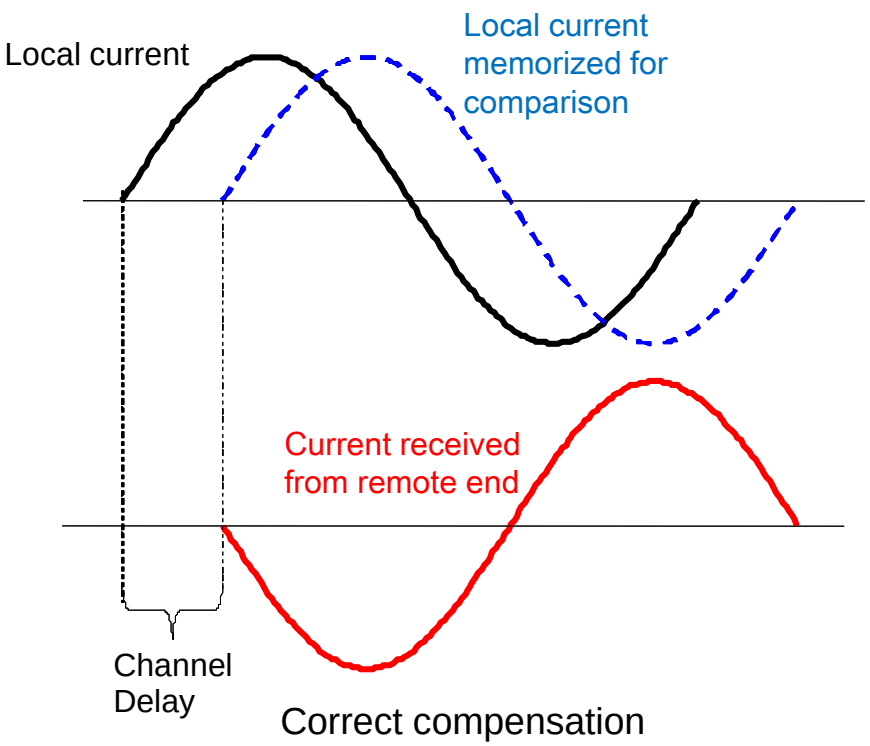

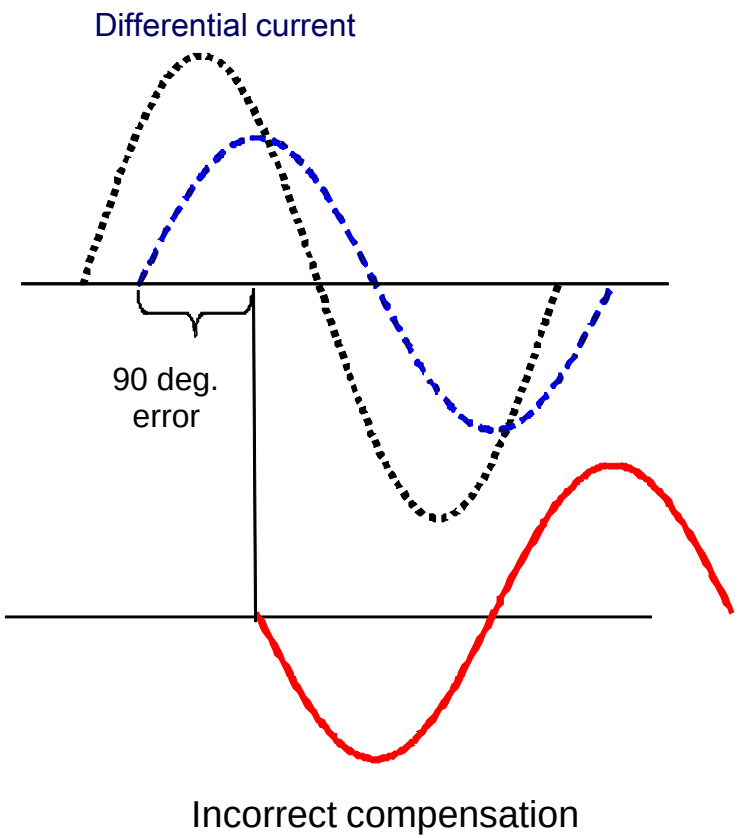

Asymmetry <2 ms - Test Setup

- 2 ms asymmetry introduced

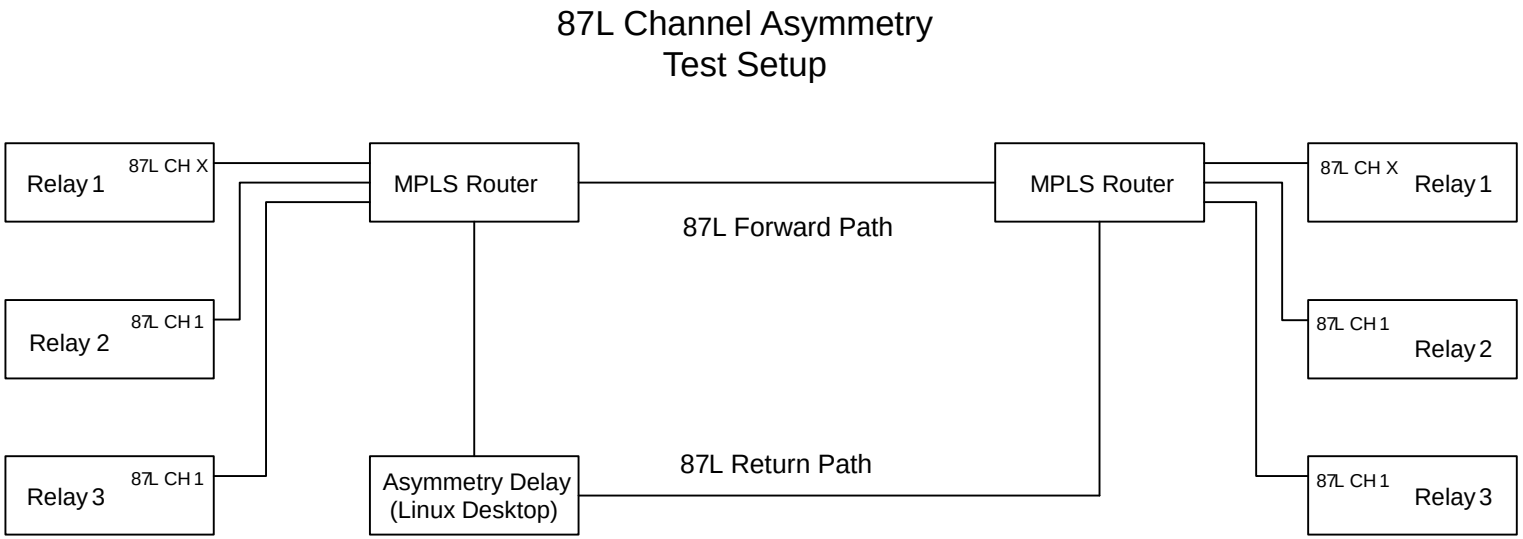

Fail-over <3 ms – Test Setup

87L Channel Link Break
Test Setup

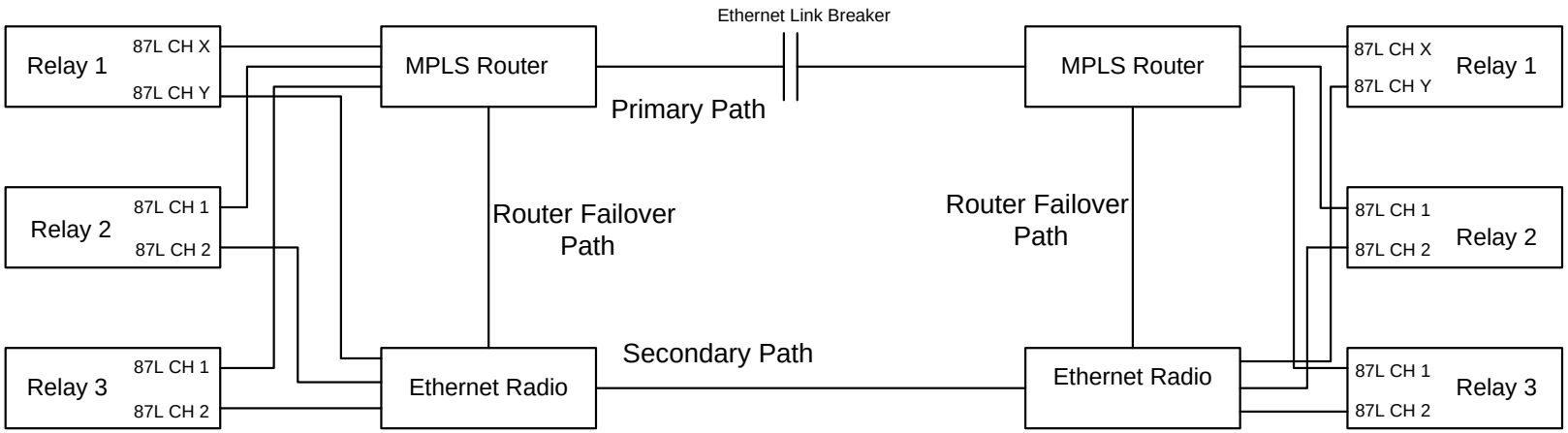

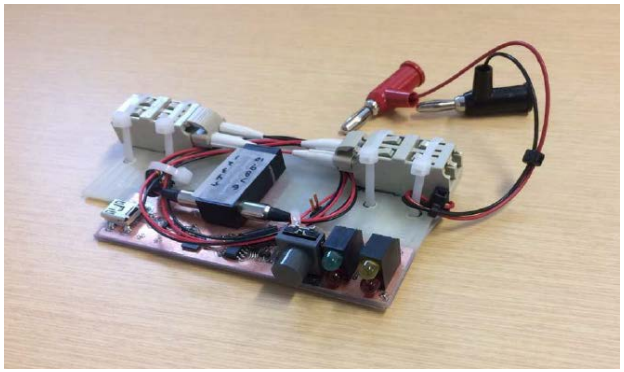

Latency <5 ms

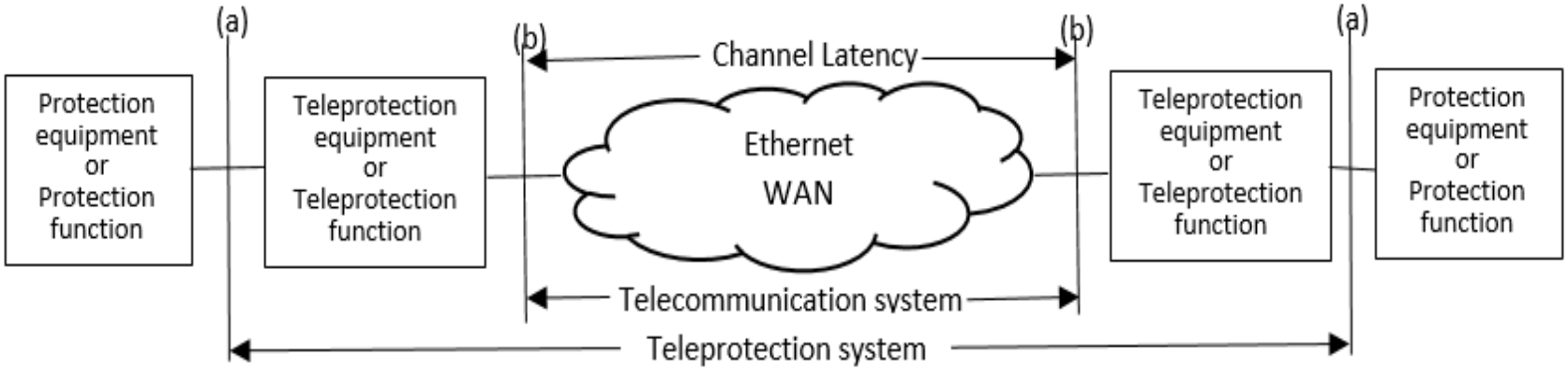

- Relays measure latency from (a)-(a) or (b)-(b) depending on the relay type
- 5 ms specification is for (b)-(b)

Latency <5ms - Test Results

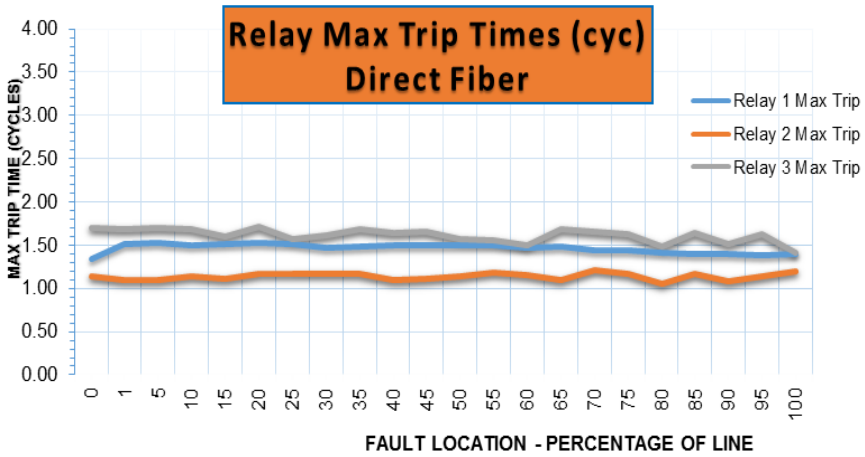

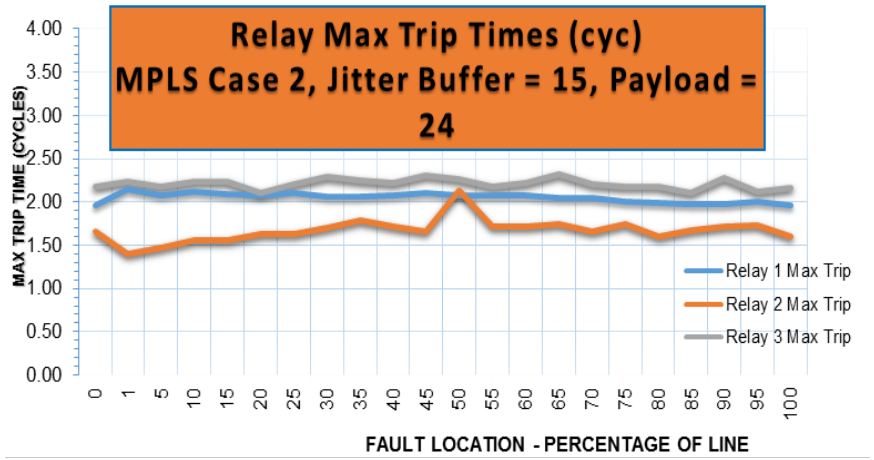

Summary of Test Results

Communication Requirement	Specification	Results
Latency	< 5 ms	Pass[1]
Asymmetry	< 2 ms	Pass[2]
Failover	< 3 ms	Pass[3]
Availability	> 99.95%	N/A

[1] Latency < 5 ms achieved with specific Jitter Buffer and Payload MPLS router settings.

[2]Asymmetry < 2 ms achievable with specific network design. Laboratory tests show protection operates correctly at 2 ms asymmetry specification limit.

[3]Failover < 3 ms achievable with 2 of 3 relays meeting specification. Protection system with designed failover paths and protective relay failover meets failover specification. MPLS routers do not meet failover specification by failing over to backup Ethernet router path.

Conclusions

- The schemes and relay settings are thoroughly tested in the RTDS lab on accurate protected-circuit and system models, and with lab MPLS network routers and connections.
- It is not possible to emulate all of the in-service MPLS network conditions in the lab, but lab tests with thousands of fault simulations produced extensive baseline reference performance results.
- With baseline results, root-cause analysis of any protection misoperations during field testing will not require extensive retesting of proven protection schemes.

Conclusions (continued)

- Laboratory and field relay testing are validating the new MPLS application and are promoting learning about the new communications system for SDG&E engineers, technicians and operations personnel.
- The long failover times of 50 to 300 ms for MPLS Ethernet channels are overcome with a redundant live MPLS path scheme enabled by high MPLS data capacity – relays connect directly to redundant paths and achieve failover time of 0 to 2 ms.
- Direct fiber paths do not need to be converted to MPLS Ethernet.

Conclusions (continued)

- Laboratory testing has shown that MPLS networks are a viable communications medium for protective relay telecommunication traffic if designed to account for latency, asymmetry, failover and availability.
- RTDS tests validated settings for routers and switches of the field MPLS network, as well as for the relays.
- RTDS testing has allowed SDG&E to specify and set the channel/communications monitoring parameters in the relays to support MPLS Ethernet performance monitoring – had not been implemented or needed with TDM.

Acknowledgements

A special "Thank You" to those who have contributed to the creation and completion of this paper and presentation:

- Mike Mahoney – Burns & McDonnell
- Clint Struth and Cory Struth – SCI Networks
- Terry Wright – GDC Consulting