Optimizing HV Capacitor-Bank Design Protection & Testing

Benton Vandiver III

ABB Inc.

71st Annual Conference for Protective Relay Engineers

Texas A&M University

Introduction

Shunt Capacitor Bank Considerations

Protection Functions

Control Functions

Testing Considerations

Conclusion

Shunt Capacitor Bank – Considerations

- Used for local voltage and VAr support
- HV applications commonly use grounded and ungrounded banks of single- or double-wye configurations (some H-type too)
- Protection scheme linked to SCB configuration
- Choice of fused or unfused capacitor elements
- Choice of can voltage and VAr size (critical factor)
- Key challenge: detect unbalance at the element level

Shunt Capacitor Bank - Considerations

- What size bank is needed? (ex. 164kV, 161MVAr)
- Which configuration and protection scheme is preferred?
- What are the operational requirements?
- Desire one standard design, flexible deployment.
- Easy to test, commission, maintain.
- Maximize operational reliability.
- Most Important – know the standards (IEEE Std. 18 and IEEE C37.99)

SCB Wye or Wye-G Externally Fused Cans

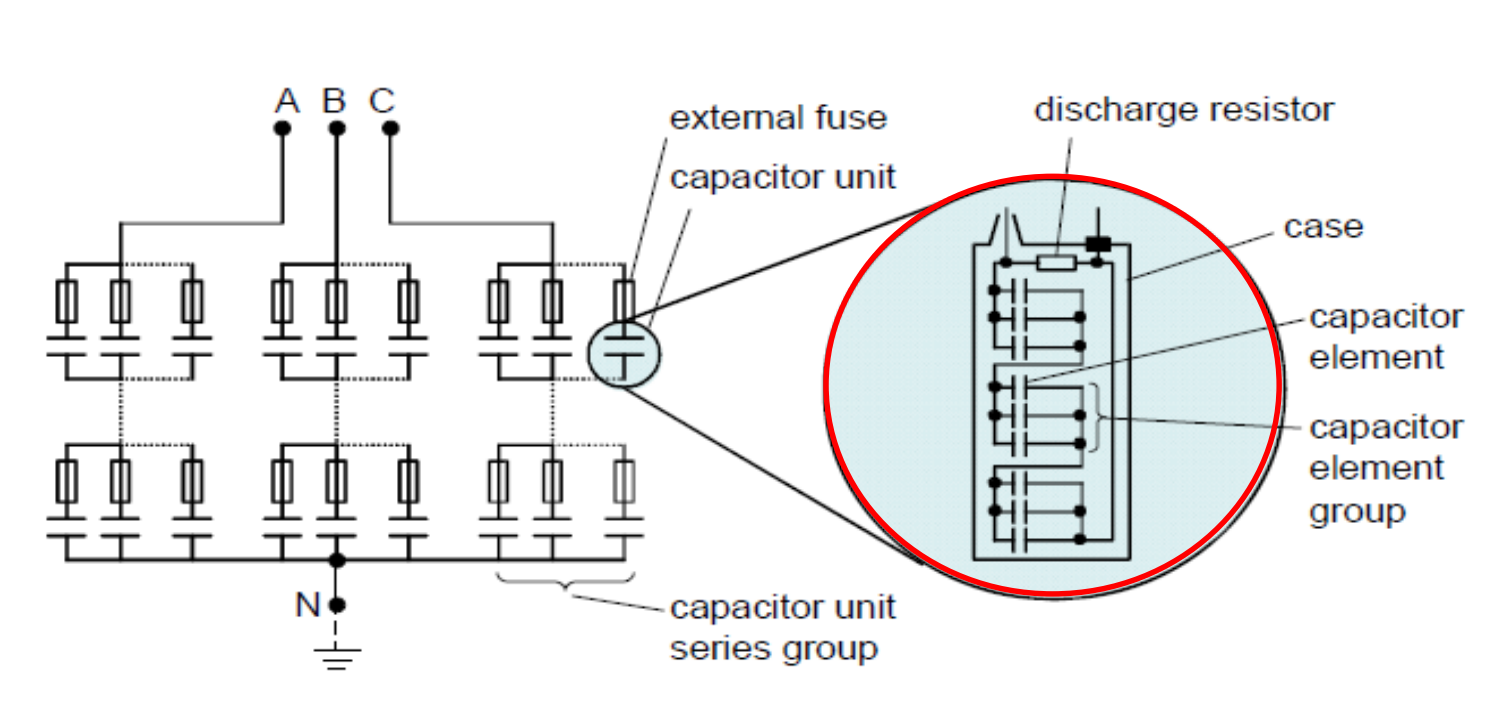

SCB Wye or Wye-G Internally Fused Cans

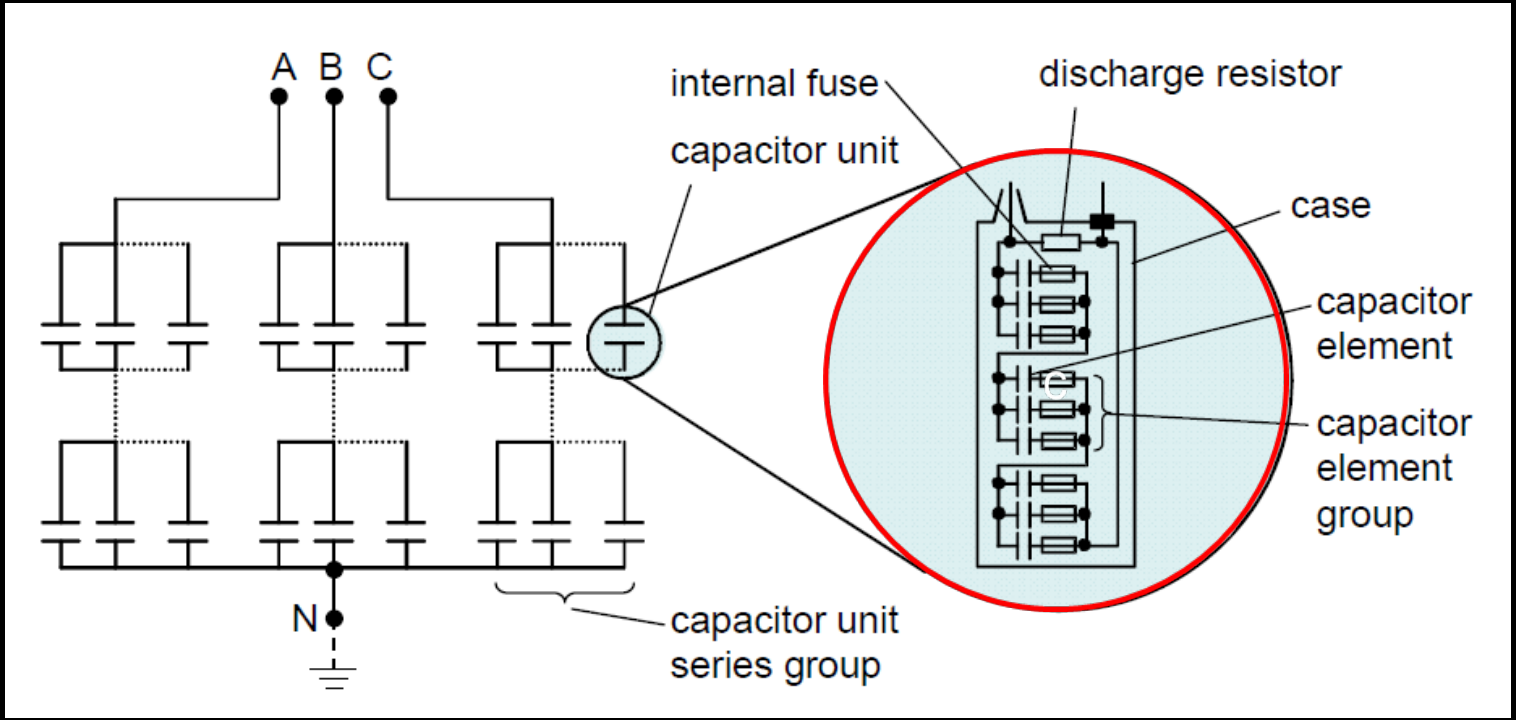

Shunt Capacitor Bank Considerations

- What size bank is needed? (ex. 164kV, 161MVAr)
- Which configuration is preferred?
- Preferred protection scheme?
- What are the operational requirements?
- Desire one standard design, flexible deployment.
- Easy to test, commission, maintain.
- Maximum operational reliability.

Shunt Capacitor Bank Considerations

- What size bank is needed? (ex. 164kV, 161MVAr)
- Which configuration is preferred?
- Preferred protection scheme?
- What are the operational requirements?
- Desire one standard design, flexible deployment.
- Easy to test, commission, maintain.
- Maximum operational reliability.

SCB Single Wye Bank Unbalance Protection

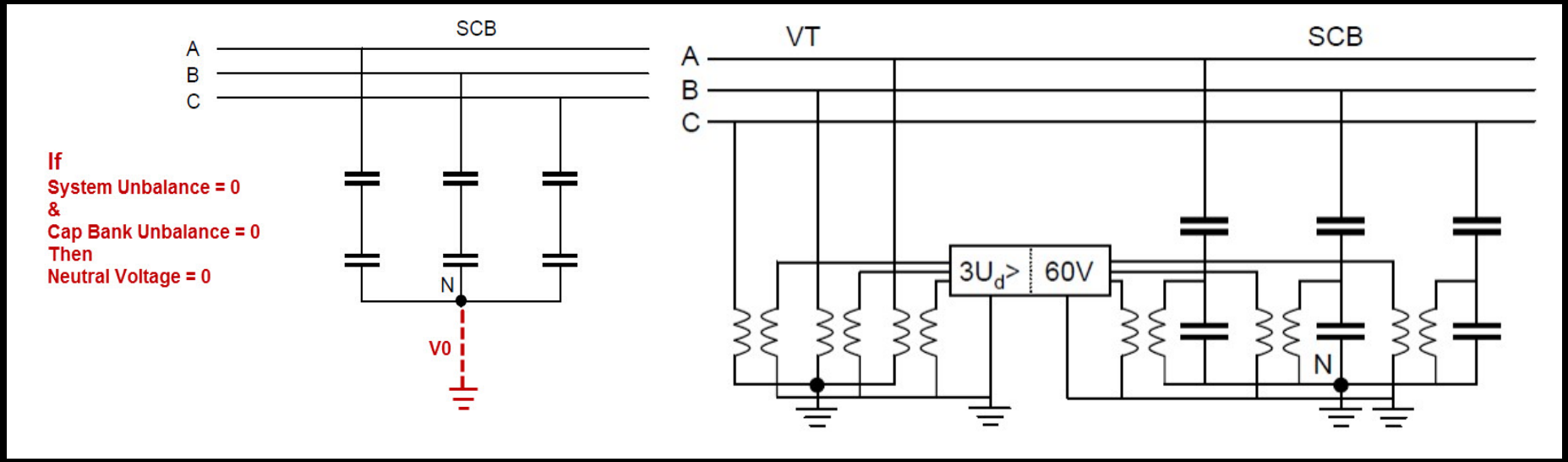

SCB Double Wye Bank Unbalance Protection

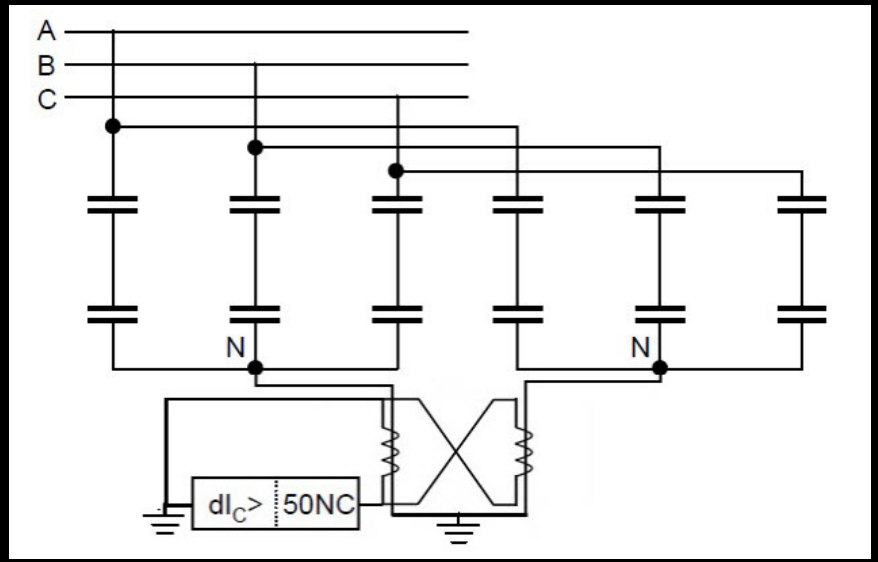

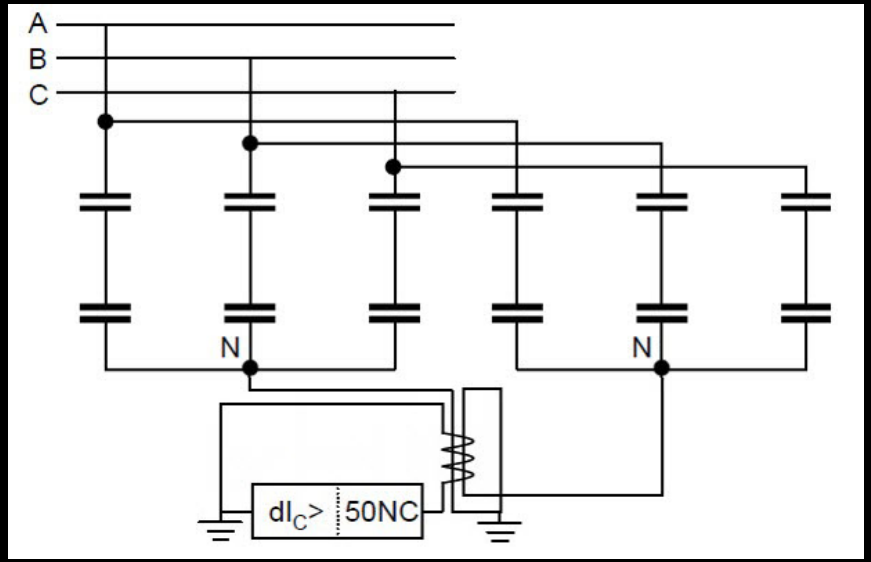

SCB H-Bank (Grounded or Ungrounded) Protection

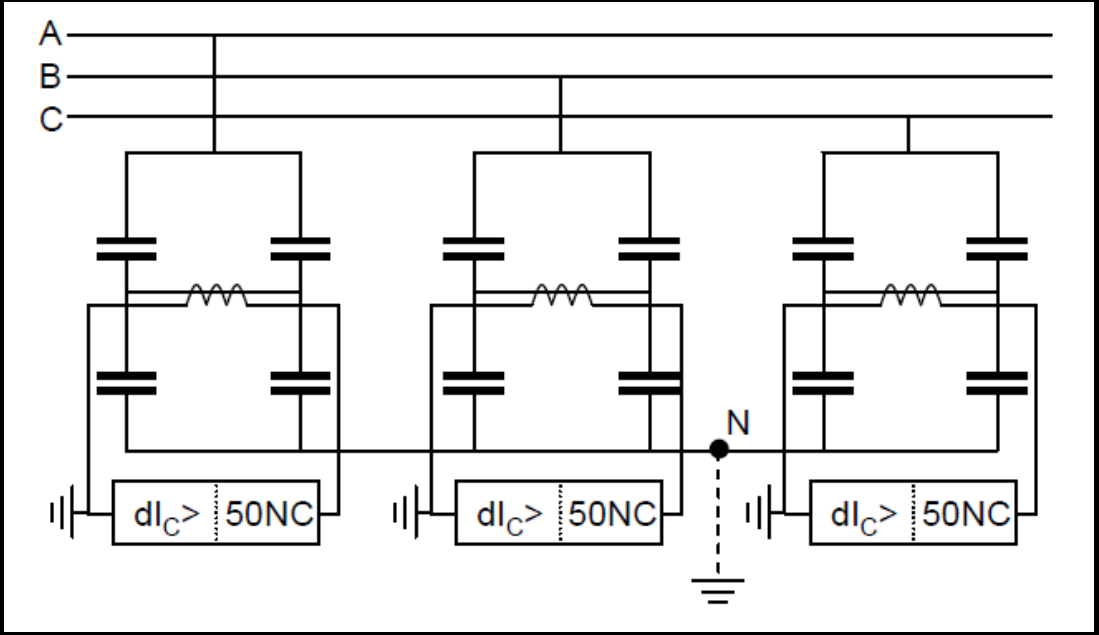

Shunt Capacitor Bank System and Design Considerations

System Bus Voltage	164kV L-L
VT Ratio	1400:1 (94.69kV / 67.63V L-G)
CT Ratio	120:1 (600:5)
Grounded Wye Bank (27MVAR) 1-Stack	3 parallel strings x 5 units w/ 9 groups per can (19.92kV, 600kVAR /can)
Low Voltage Capacitor (VC1)	0.83kV, 167kVAR

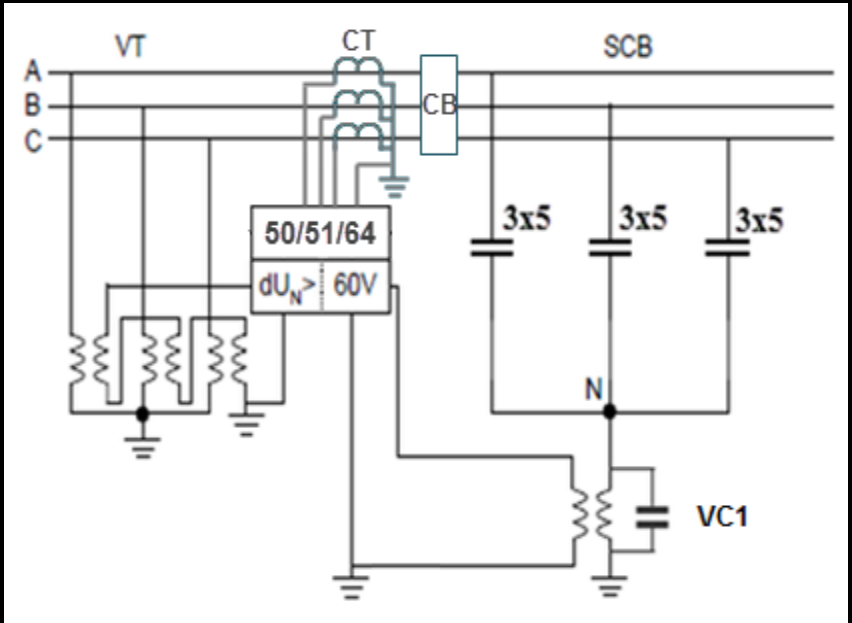

Protection Considerations

Unbalance Protection (50N, 59N, 60V)

- o Measure I neutral: subject to system/natural unbalance
- o Measure 3V0: subject to system/natural unbalance
- o Measure Vdiff: only compensate for natural unbalance

Double-wye banks and H-banks:

- o Also secure from system unbalance
- o Require natural unbalance compensation

Other Protection Elements – Total Bank Protection

- Short Circuit (50)
- Overload (51P)
- Negative-Sequence (51Q)
- Earth Fault (50/51N)
- Undercurrent (37)
- Under/over voltage (27/59)
- Residual Overvoltage (59N)
- Breaker Failure (50BF)

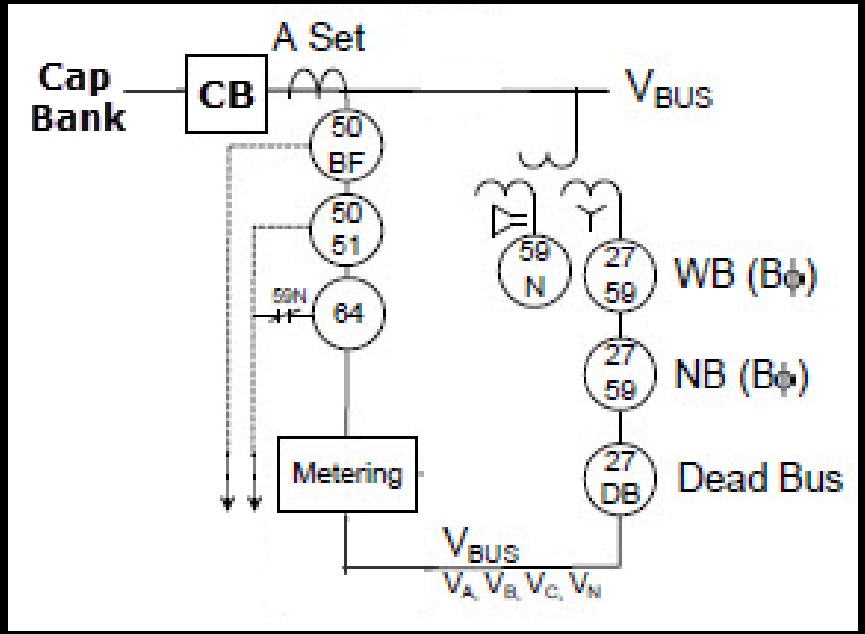

SCB Overload Capability Curve – determines 50/51 for SCB

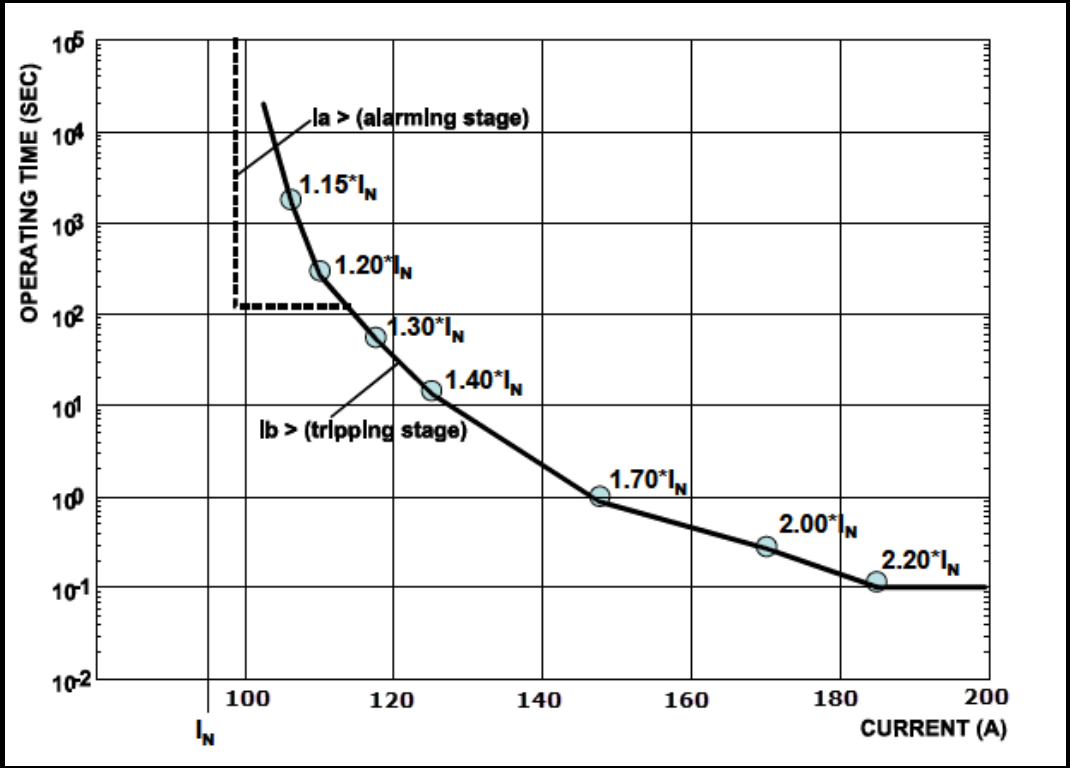

Shunt Capacitor Bank Considerations

- What size bank is needed? (ex. 164kV, 161MVAr)
- Which configuration is preferred? (Wye-G, Min Cans)
- Preferred protection scheme? (60V + Bank Prot)
- What are the operational requirements?
- Desire one standard design, flexible deployment.
- Easy to test, commission, maintain.
- Maximum operational reliability.

Operational Considerations

MultiStack for flexible VAr compensation

- Local/Remote and Manual / Automatic modes
- Voltage Control for Stack Switching (Wide Band/Narrow Band)
- Equalization of Stack Operation Time
- Hunting control during auto mode
- Minimize transient switching (zero crossing close)

Safety Protocols/Interlocks for Man/Auto & Rem/Loc

- HMI local controls
- Lockout / Tagout
- Remote Status and Control

Shunt Capacitor Bank Considerations

- What size bank is needed? (ex. 164kV, 161MVAr)
- Which configuration is preferred? (Wye-G, Min Cans)
- Preferred protection scheme? (60V + Bank Prot)
- What are the operational requirements? (Multi-stack)
- Desire one standard design, flexible deployment.
- Easy to test, commission, maintain.
- Maximum operational reliability.

Advanced Capacitor Bank Control

Lessons from MV Capacitor Banks:

- Standardize configuration & element numbers
- Detect element level failures @ Alarm and Trip points
- Use transient free switching for applying SCB stacks to system
- Provide simple manual / auto operations for Local/SCADA/DA
- Modularize for ease of scalability, testing, commissioning, & training

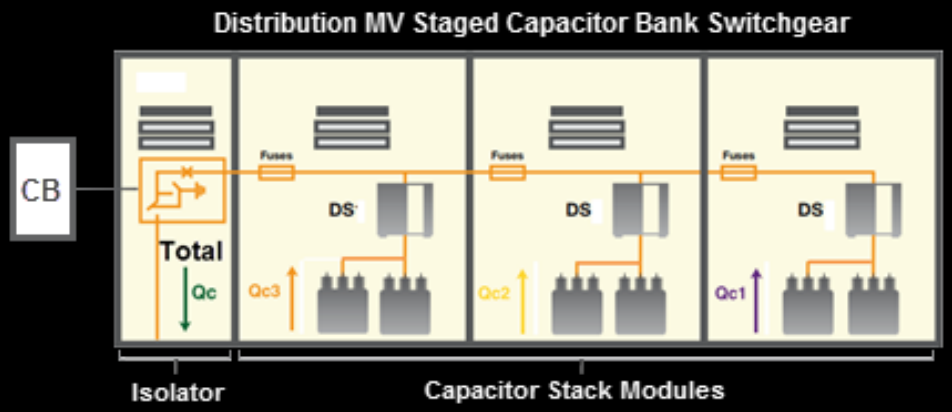

Capacitor Bank Switching is Critical – Use Point on Wave Switching

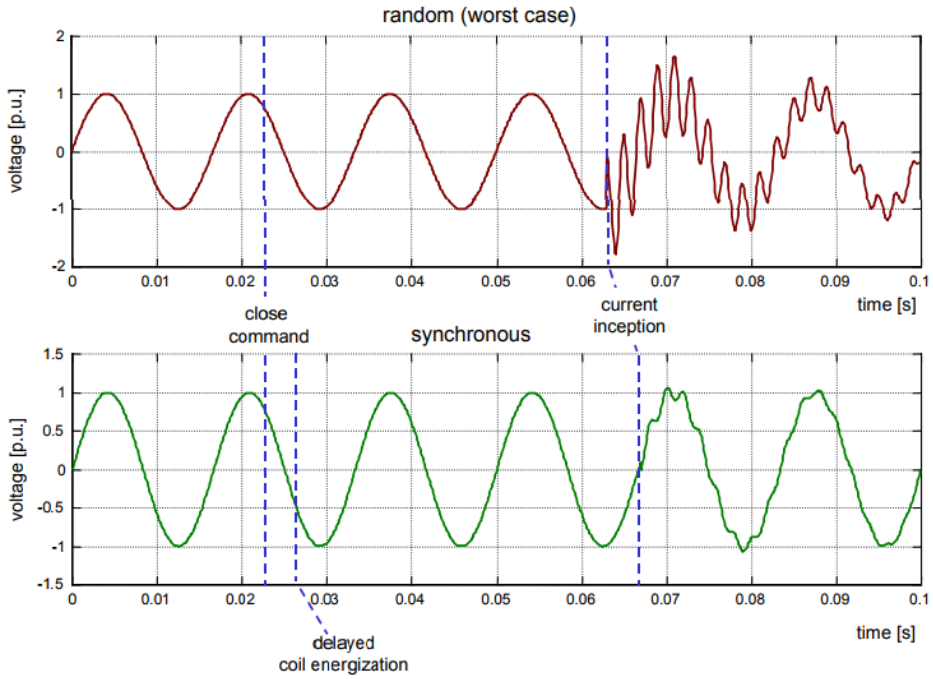

Random and synchronous closing for capacitor banks

Capacitor Bank Switching is Critical – technology comparison

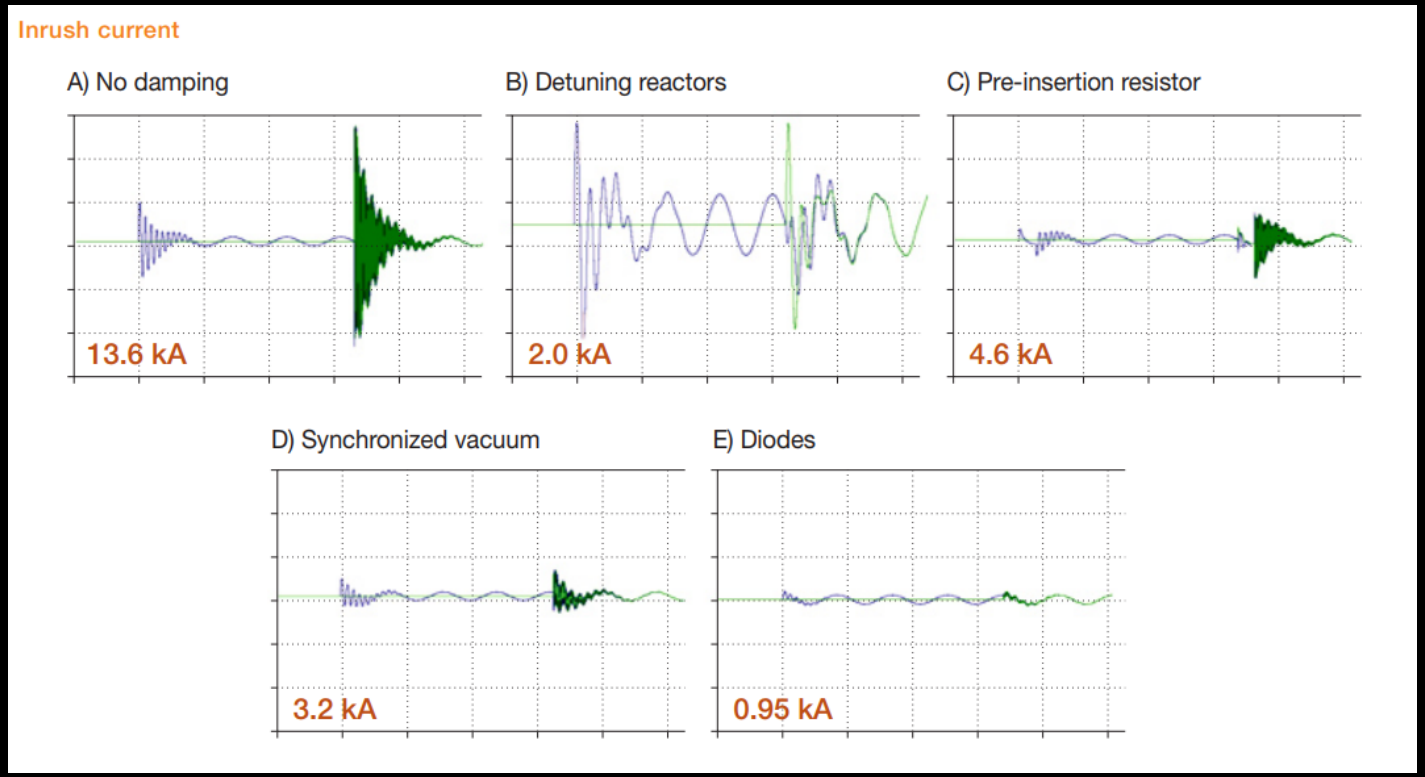

Capacitor Bank Switching is Critical – technology comparison

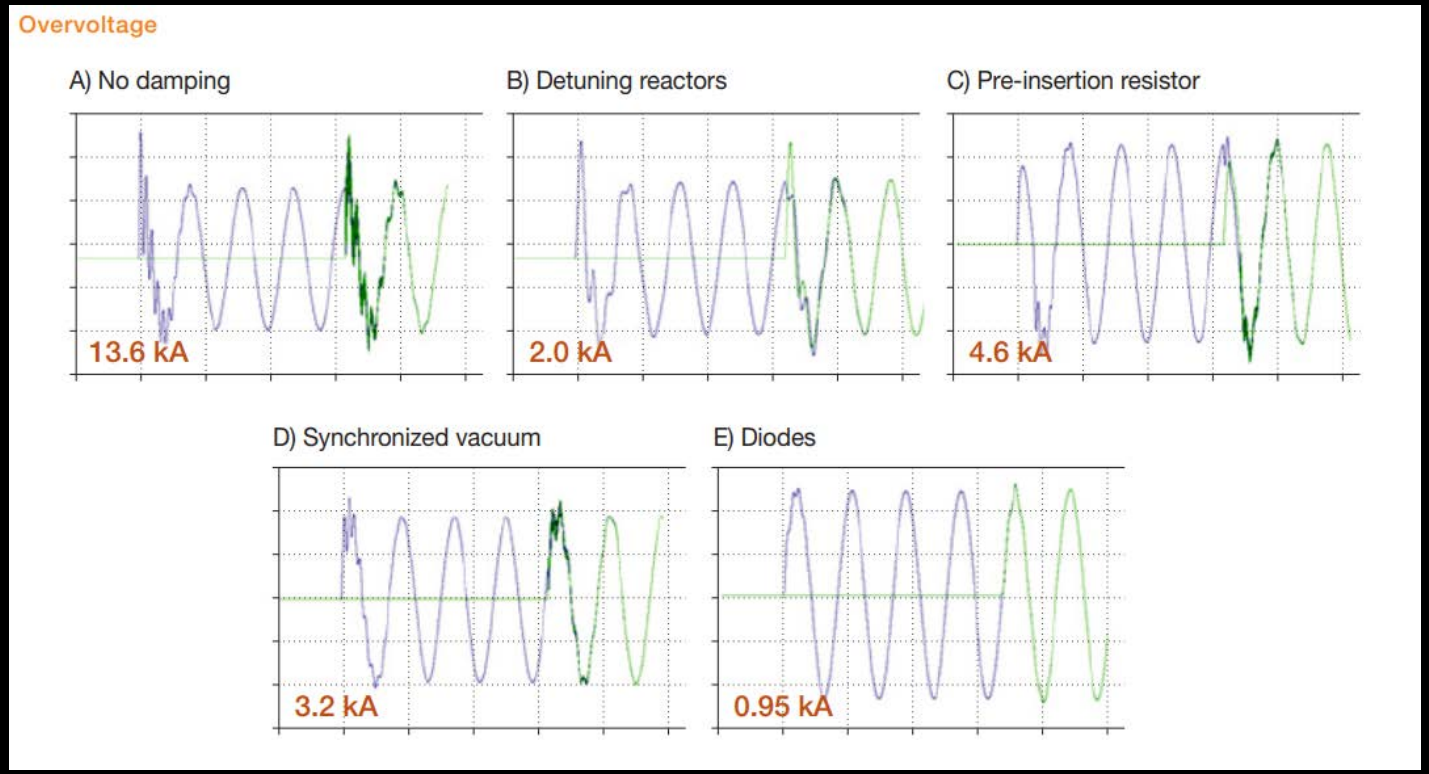

Advanced SCB Flexible VAr Protection & Control

Six-Stack Capacitor Bank Protection and Control Scheme

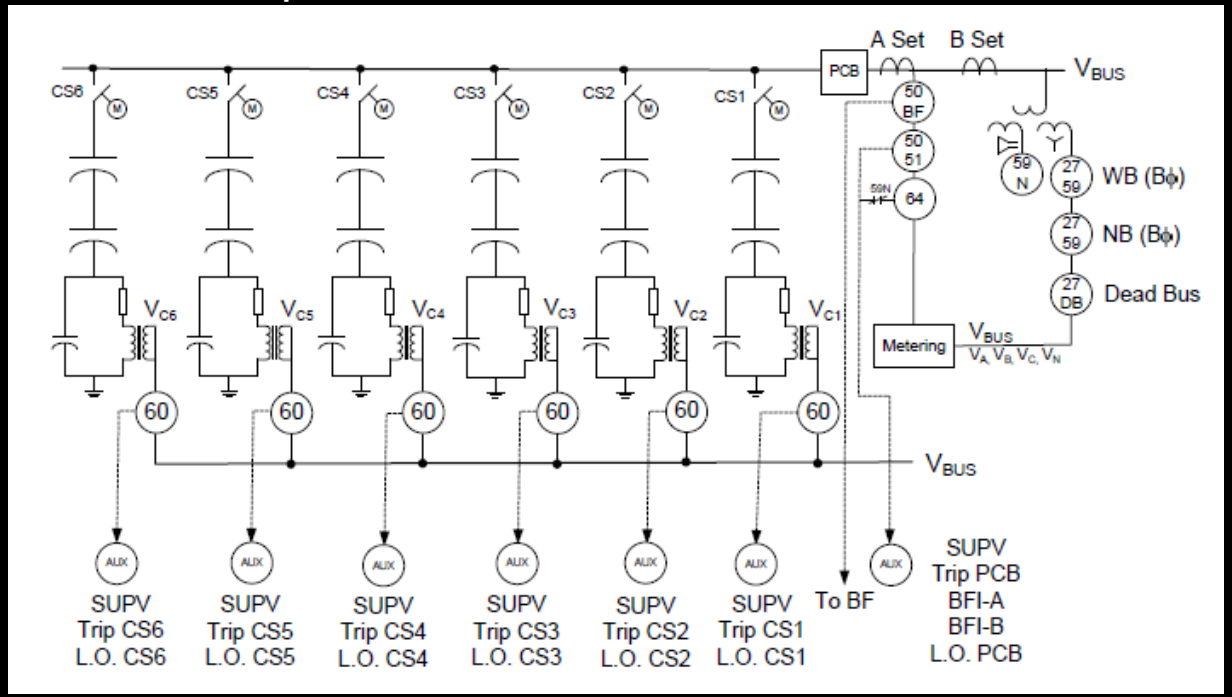

Advanced Modular SCB Flexible VAr Protection & Control

Six-Stack Capacitor Bank Protection and Control Scheme

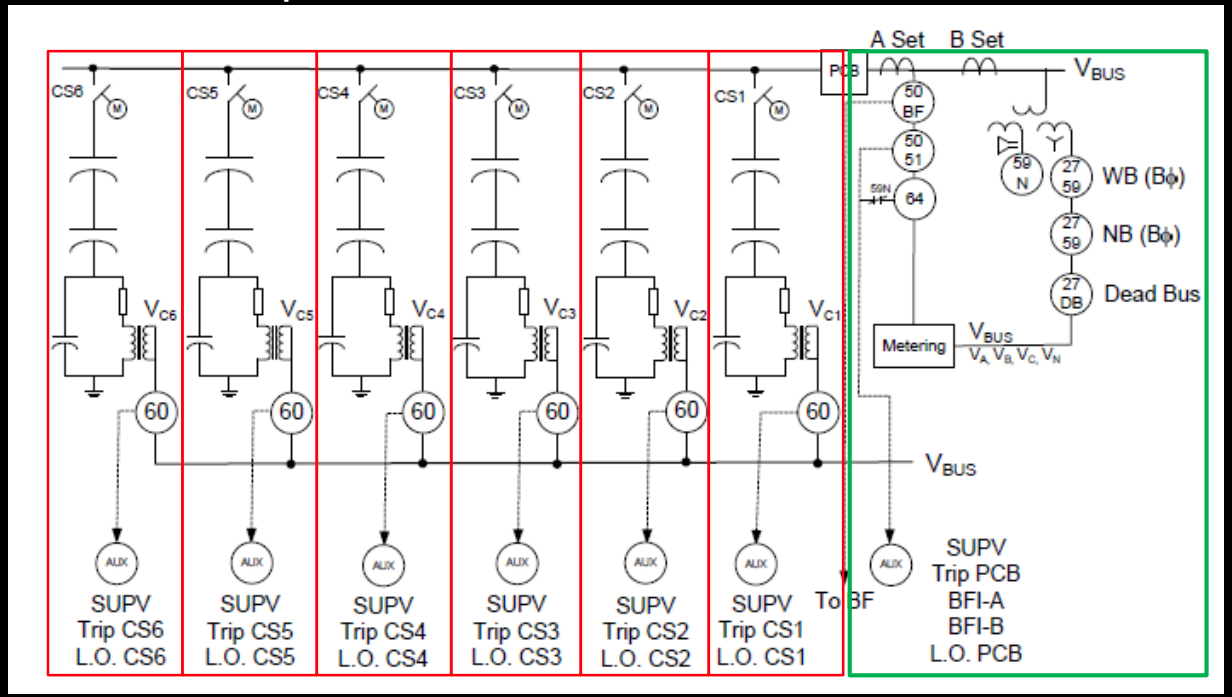

Shunt Capacitor Bank Considerations

- What size bank is needed? (ex. 164kV, 161MVAr)
- Which configuration is preferred? (Wye-G, Min Cans)
- Preferred protection scheme? (60V + Bank Prot)
- What are the operational requirements? (Multi-stack)
- Desire one standard design, flexible deployment.
- Easy to test, commission, maintain.
- Maximum operational reliability.

Understanding Advanced SCB Scheme Control

Operation equalization

- o Stack operation (observe discharge times)
- o Balances operations/service life (CS Counter)

Auto/Man VAr control (WB/NB operation)

Detect SCB hunting in Auto mode

- o Operator safety features
- o Consistent with utility operating philosophy
- o Human-machine interface standard
- o Lockout / tag out
- o Maintenance reporting requirements

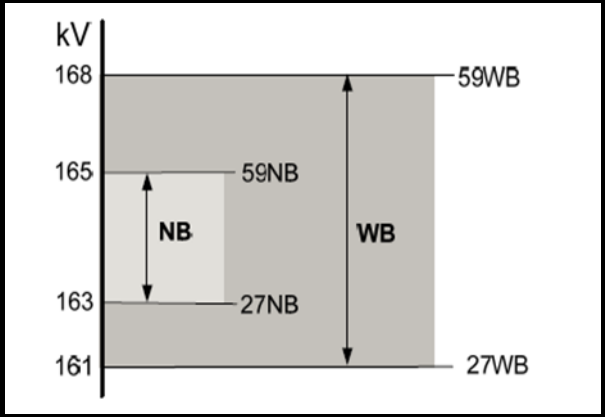

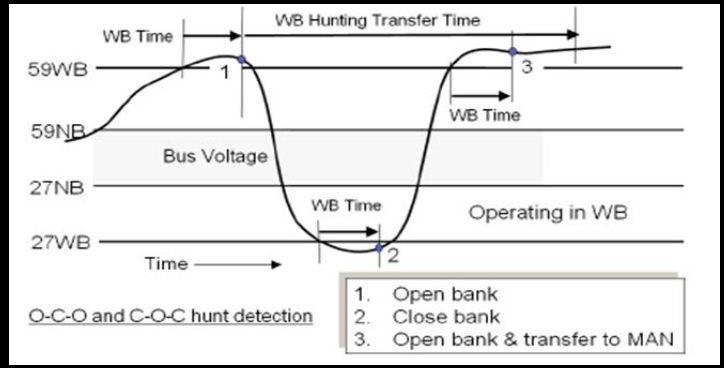

Adaptive Protection Makes Testing Interesting

Adaptive SCB protection, based on # stacks in use

- Voltage Diff (60V) requires accurate test sources, but easily verified
- Overall SCB protection is easily tested (50/51/51Q/59/64/50BF)

Local automatic control

- WB and NB voltage control (27/59)
- Also allows local operator to select WB or NB control for manual operations assistance

Remote automatic control

- Allows dispatcher to select WB or NB control for changing system conditions

Testing Control Functions Special Notes

IED voltage element measuring accuracy very important

Raise- and lower-voltage settings
are only few kV apart

- 163 kV for raise
- 165 kV for lower
- **Voltage transformer ratio is 1400:1**

Relay measures secondary voltages
of **67.22 V and 68.04 V**

Difference is less than **1.0 volt !**

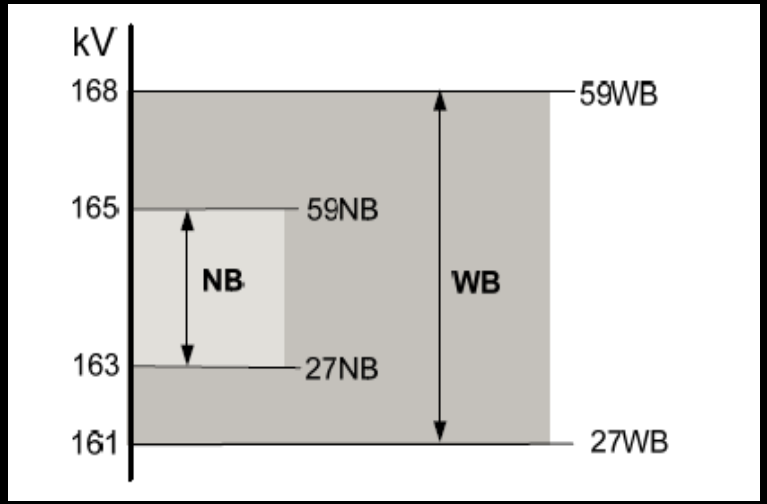

Conclusions

SCB configuration drives the protection scheme

- Wye-G provides a simple cost effective & understandable base
- Internally fused capacitor cans are detectable / lower operation impact

Standardized stack design makes SCB's scalable, lower cost

- Operation – advantages outweigh perceived complexity
- Testing – protection & control is simple, logic more complex but straight forward, capacitor failures easier to find

Point on Wave closing control is necessary
(future diode technology can improve this)

Conclusions

Voltage Differential (60V) is best for detecting capacitor element failures
(but requires compensating for the natural unbalance)

- Add SCB natural unbalance compensation to commissioning process

Testing the protection in a stack scheme is both easy and challenging

- Elements are simple, but SCB adaptive protection adds tests (# of stacks)
- Testing requires very accurate sources (ex. 60V differential)

Know the relevant standards (IEEE Std. 18 and IEEE C37.99)

Making the SCB modular simplifies the SCB application

Questions?

Benton Vandiver III, PE

ABB Inc.