Who has the 32?

R. Benjamin Kazimier
Basler Electric Company
Highland, Illinois, USA

I. Introduction

The proliferation of Distributed Energy Resources (DER) has led to an increased number of utility interconnection requests. Utility interconnection agreements can be confusing to DER developers and are often misunderstood, not only in scope, but in spirit. In the case of co-ops and municipalities without a full engineering staff, these documents may not be well-understood internally. Still, once established, these guidelines must be followed or negotiated in an intelligent manner. One topic that is routinely questioned by DER developers and frequently required by the interconnection agreement is Directional Power (ANSI device number 32) protection. Therefore, it begs the question, "Who has the power?"

While simple in concept, directional power protection often becomes confusing when the conversation extends beyond what is written in the interconnection agreement. Understanding the requirements and the various CT and VT configurations that can be used can be confusing to someone with little experience with these applications. The probability for human error when making CT and VT connections during installation can be a source of additional confusion during testing and commissioning.

This paper seeks to be a tutorial for the application of directional power for DER installations. First, utility interconnections are explored. Second, a review of directional power is provided. Third, practical considerations which explore, in depth, details of directional power relaying are offered. Finally, a conclusion is given to summarize the findings.

II. Utility Interconnections

A utility interconnection is an agreement between a party who wishes to connect a generation source to the electric utility system and the electric utility. The rise in DER installations is a result of several factors: utility deregulation, environmental concerns, U.S. based tax credits (federal and state incentives), and public desire to own generation combined with a decreased cost of ownership. This is changing the way power is delivered and consumed. Utility distribution grids used to be fairly straightforward. Power was supplied from utility generation sites and power plants. Customer loads were served with radial feeders, as shown in Figure 1. Some heavy industry had on-site generation, now defined as DER, as did facilities with critical loads that required backup generation, e.g. hospitals. In some instances, these DER were connected to the utility in parallel. Interconnection requests have existed for quite some time but were limited.

Figure 1. Typical Power Plant with Radial Distribution

This is no longer the case. In some parts of the world such as Germany, Ireland, and in several states in the U.S. including California, New Jersey, and Hawaii, there are large penetrations of DER interconnections on a scale that was probably not imagined by many until recently. It is still growing, with solar being the fastest growing segment. The U.S. Energy Information Administration (EIA) collects data related to the sale, use, and consumption of energy. In late 2015, the EIA began including small scale DER of the photovoltaic type in their generation capacity and output estimates. At that time, reports showed that California had more than 3 GW of solar capacity as shown in Figure 2. The most recent report available at the time of this publication shows that in November 2016 residential solar for California produced 360,000 MW/hours, an increase from 263,000 MW/hours in the previous year. From Reference 1, Table 1.17.A. Year-to-date total DER production was 4,833,000 MW/hours, an increase from 3,292,000 MW/hours the previous year, Reference 1, Table 1.17.B. These are clearly significant numbers which prove the fundamental change that is taking place in the electric power grid.

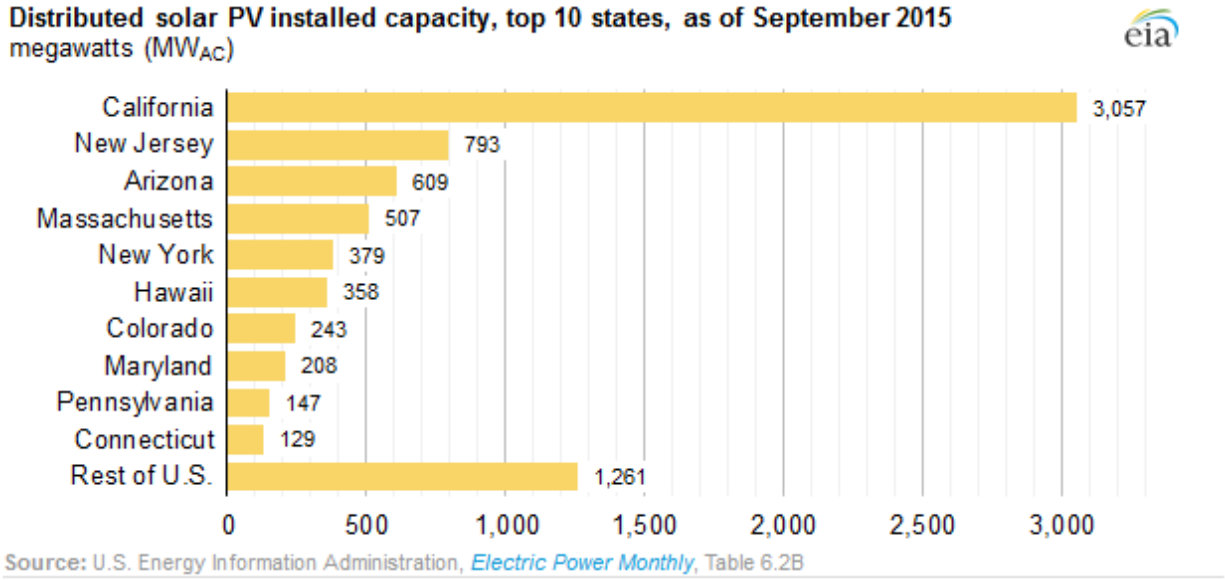

Figure 2. PV installed capacity from EIA (Reference 2)

Interestingly, Table ES1.B of Reference 1 shows utility scale coal, petroleum (liquids and coke), natural gas, other gas, and nuclear year-to-date (November 2016) generation totals at 3,173,090,000 MW/hours compared to year-to-date (November 2015) totals of 3,252,711,000 MW/hours. Exploring the data further in Table 1.1 of Reference 1, Figure 3 plots utility scale generation of the aforementioned fuel types, total generation versus all utility scale generation types (including renewables) from 2006 to 2015. Adding the estimated solar (photovoltaic) DER generation for the available data years 2014 and 2015 and considering that Table 1.17.B shows that DER solar year-to-date (November 2016) totals already eclipse 2015 totals by 22.66% at 18,281,000 MW/hours, one can conclude that demand for electric power is at least holding steady, if not growing, and renewables exceed that increased demand both on a utility-sized scale and with contributions from DER. Still, the vast majority of power production is from utility scale sources trending toward additional renewables and DER contributions.

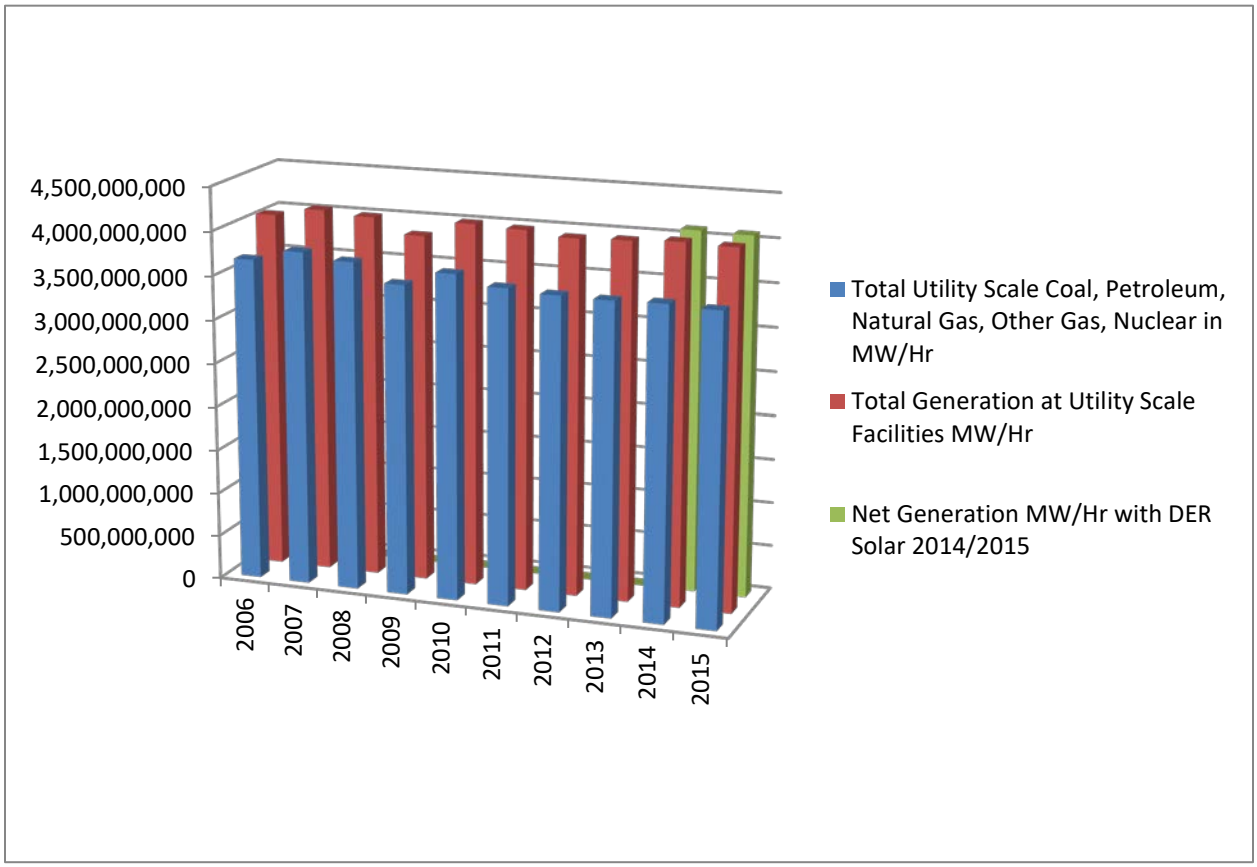

Figure 3. Generation Totals including DER

What can be concluded from the previous discussion? Future energy production will be owned by utilities and the private sector. Who has the power? Everyone does, not only in a literal sense as power producers and consumers, but also metaphorically as the grid evolves. The stakes for producing reliable, safe, and effective electric power are becoming more equal as traditional consumers of electric power also become generation sources. The intention of IEEE 1547 is to provide "a uniform standard for interconnection of distributed resources with electric power systems" (Reference 3).

A relay application engineer is placed in a unique position, especially given the author's experience at IEEE 1547 meetings, to hear sides of the debate from utility engineers, DER equipment manufacturers, and DER developers/end users. Based on the results of an unscientific survey combined with years of observation, some still believe that utility companies sometimes intentionally make it difficult for DER interconnections to be made for a variety of reasons. In other words, the spirit of the interconnection agreement is sometimes or often, depending on whom one asks, considered to be onerous to those who wish to interconnect to the utility. One subject that regularly arises as a justification for this notion is the necessity for a utility grade protective relay to monitor the flow of power and possibly provide other specified protective functions at the interconnection point. The question that arises and relates to

the previous point of the process being viewed as difficult is, "Why is this requirement necessary and why should I (the DER owner or developer) have to pay for it?"

Directional Power (32) protection can be used for DER applications in a number of different ways at intertie points. For standby generation or peak shaving, the requirements may be different than for net-metering agreements. For example, a standby generator operator who wishes to parallel to the utility for longer than 100 milliseconds or DER for peak shaving will more than likely have a requirement at the interconnection point to not export power to the utility. They will also have a sensitive 32 setting that will open the interconnection point if power flow to the utility is detected. In a net metering agreement, a 32 element might be deployed with a setting above the agreed upon export quantity with a long time delay simply to ensure the terms of the agreement are kept within the agreed upon limits.

Excluding the net metering example previously given, the primary reason to require 32 protection at the interconnection point is to prevent the formation of an unintentional island. IEEE 1547 defines an island as "a condition in which a portion of an Area EPS is energized solely by one or more Local EPSs through the associated PCCs while that portion of the Area EPS is electrically separated from the rest of the Area EPS." The Area electric power system (EPS) is the electric utility and the local EPS is from the DER to the interconnection Point of Common Coupling (PCC) with the electric utility as seen in Figure 4. Consider that breaker 52-1 opens at the Area EPS substation and all other breakers stay closed. An island has been created where EPS 1 is a load to the DER within EPS 2.

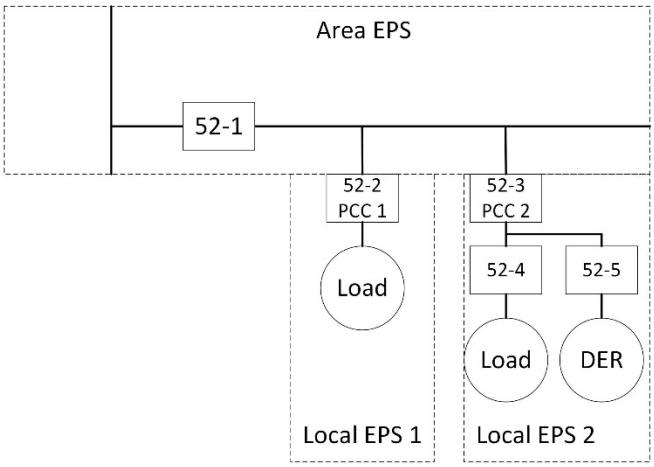

Figure 4. Area EPS – Local EPS

Unintentional islands are undesirable for a number of reasons such as utility personnel safety, public safety, concerns of transient overvoltages, power quality issues, and liability. Electric utilities are governed by state regulatory commissions to provide voltage and frequency within certain established levels. In the example above, one concern from the Area EPS standpoint is that if equipment at EPS 1 is damaged because of voltage and frequency swings outside of the regulation boundaries, while

being served by the DER at EPS 2 during an unintentional island, the Area EPS could be held responsible. EPS 2 has no regulatory oversight, nor is there an agreement with EPS 1 to be supplied power by EPS 2, which creates the liability concerns. The electric utility is tasked with ensuring that these risks are minimized for all customer loads during the interconnection process. The DER owner or developer is responsible for the cost of equipment to meet the requirements.

There is a solution to islanding protection that does not rely on protection elements or specialized algorithms within protective relays. The solution is commonly referred to as transfer trip or Direct Transfer Trip (DTT), wherein the utility sends out a trip signal, causing the DER facility PCC to open when Area EPS circuit conditions necessitate it, to prevent the formation of an island. One difficulty is that DTT historically relies on dedicated communication channels and is very costly. Adding DTT creates complexity to utility substations because, when circuits are switched in a substation to reconfigure circuits, DTT must follow from breaker to breaker to ensure the tripping scheme stays intact. DTT might still be preferred, not because it is expensive, but because it is reliable and best protects the utility company's liabilities. One could surmise that the use of a protective relay and existing trusted protection algorithms are a compromise that Area EPS operators are already making for DER interconnections. Still, some utilities do not rely on 32 for anti-islanding protection, while others use it in conjunction with other elements such as Frequency (81) and Voltage (59/27) or both to detect islands. In cases of high penetration of DER, the aforementioned passive methods may not suffice for proper detection of an island, and DTT might be required. Normally, those decisions are made as a result of a study completed by the utility company.

By virtue of its mission statement, IEEE 1547 seeks to harmonize the relationship between Area EPS operators and those wishing to interconnect DER to the EPS. Each utility can accept or exclude parts of IEEE 1547 and each interconnection request can be handled differently. However, it is not simply a closed matter if one is denied interconnection. The state regulatory commissions offer DER owners and developers some recourse if one feels their request is not being handled properly by an Area EPS. At the time of authoring this publication, IEEE 1547 has undergone a major revision and the document is slated for ballot soon for submission to the IEEE Standards Association. Once completed, the latest version of IEEE 1547 will represent the next step forward in improving the relationship between those wishing to interconnect and those utilities responsible for maintaining and operating electric distribution service.

III. 32 Review of Power

In order to understand how directional power relays are used, it is helpful to review the definition of electric power, how relays calculate power, how the measurement values are delivered to a relay, and some common connection types for directional power relaying.

Electric power is classically defined as the rate of generating, transferring, or using energy (Reference 6). AC power can also be defined as true power, active power, or real power. It is what does the work, for example, to illuminate a bulb or create heat in a resistor. AC power is measured in watts (W). If the load is inductive or capacitive, a phase angle difference exists between the voltage and the current which creates

reactive power (Q), measured in vars. Both quantities, watts and vars, must be supplied by a source, and that quantity is defined as apparent power (S). Apparent power is measured in VA and is the product of the rms voltage and rms current (Reference 7).

Often, reference is made to the so-called "power triangle" as shown in Figure 5. The power triangle helps to visualize the relationship between the aforementioned quantities. Indeed, using trigonometric identities, one can manipulate for which values one wishes to solve based on known quantities. The most easily recognized formula for ac power is shown in Equation 1 (Reference 7). Equations 2 and 3 (Reference 7) define reactive and apparent power respectively. All three equations assume sinusoidal rms values of voltage and current. Non-sinusoidal waveforms require different calculation methods beyond the scope of this paper.

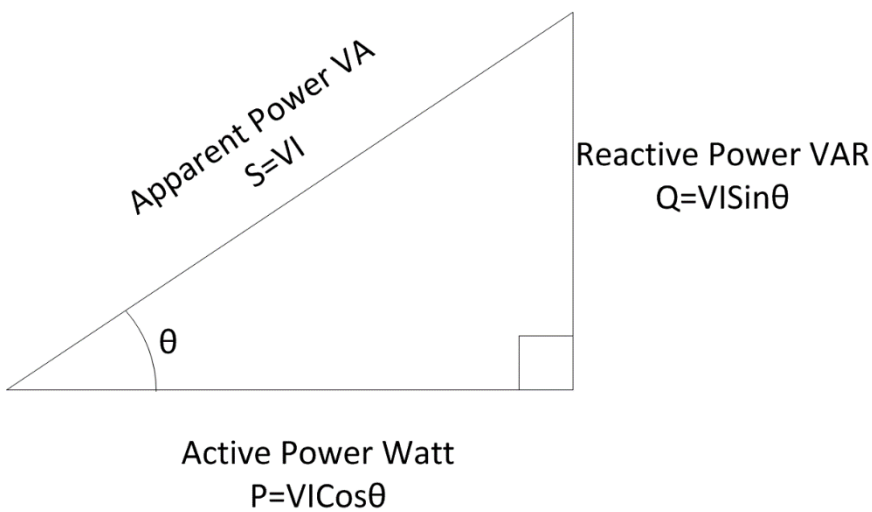

Figure 5. Power Triangle

$$P = VIcos\theta$$

Equation 1. Active Power (P)

$$Q = VIsin\theta$$

Equation 2. Reactive Power (Q)

$$S = VI$$

Equation 3. Apparent Power (S)

The result of Equation 1 (Reference 7) yields the active power (P) in watts. Multiplying by $cos\theta$ removes the reactive power portion of the product of the voltage and current, i.e. only the real portion of power is the result, in much the same way $sin\theta$ in equation 2 removes the active power and yields only the reactive power. The classic equation for power factor (PF) is shown in Equation 4 (Reference 7). Note this quotient is the same as calculating the cosine of the angular difference between voltage and current $\cos\theta$, e.g. power factor is also equal to PF= $cos\theta$.

$$PF = \frac{P}{S}$$

Equation 4. Power Factor

These definitions and descriptions are well known and usually considered when discussing ac power. What is less frequently imagined, and helps to understand ac power in detail, is instantaneous power, which will be explained next. Then, this paper will explore the details of how a measurement device, such as a relay, calculates power for use as an operating or metering quantity.

In the previous discussion of power, reference was made to rms voltage and current. The rms values and Equations 5 and 6 (Reference 7) can be used to plot sinusoidal waveforms in the time domain as shown in Figure 6. Note that multiplication by the square root of two (1.414) provides a peak value of voltage or current.

Where:

V is the rms value of the voltage (V)

I is the rms value of the current (A)

ω is the angular frequency 2πf (rad/s)

f is the power system frequency (Hz)

θ is the phase angle between the current and the voltage (rad)

t is the time (s)

$$v = \sqrt{V}2sin(\omega t)$$

Equation 5. Sinusoidal Voltage

$$i = \sqrt{2}Isin(\omega t - \theta)$$

Equation 6. Sinusoidal Current for a Linear Load, Assumed to be Lagging the Voltage $(\omega t - \boldsymbol{\theta})$

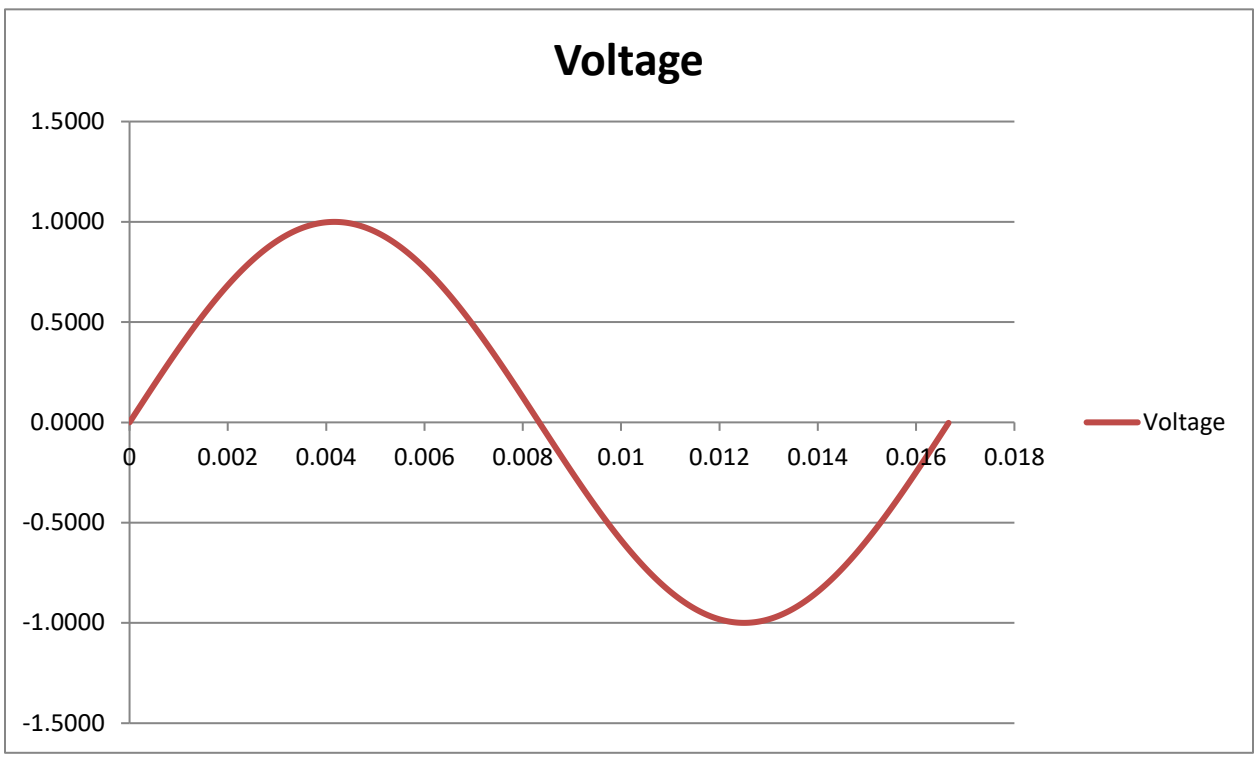

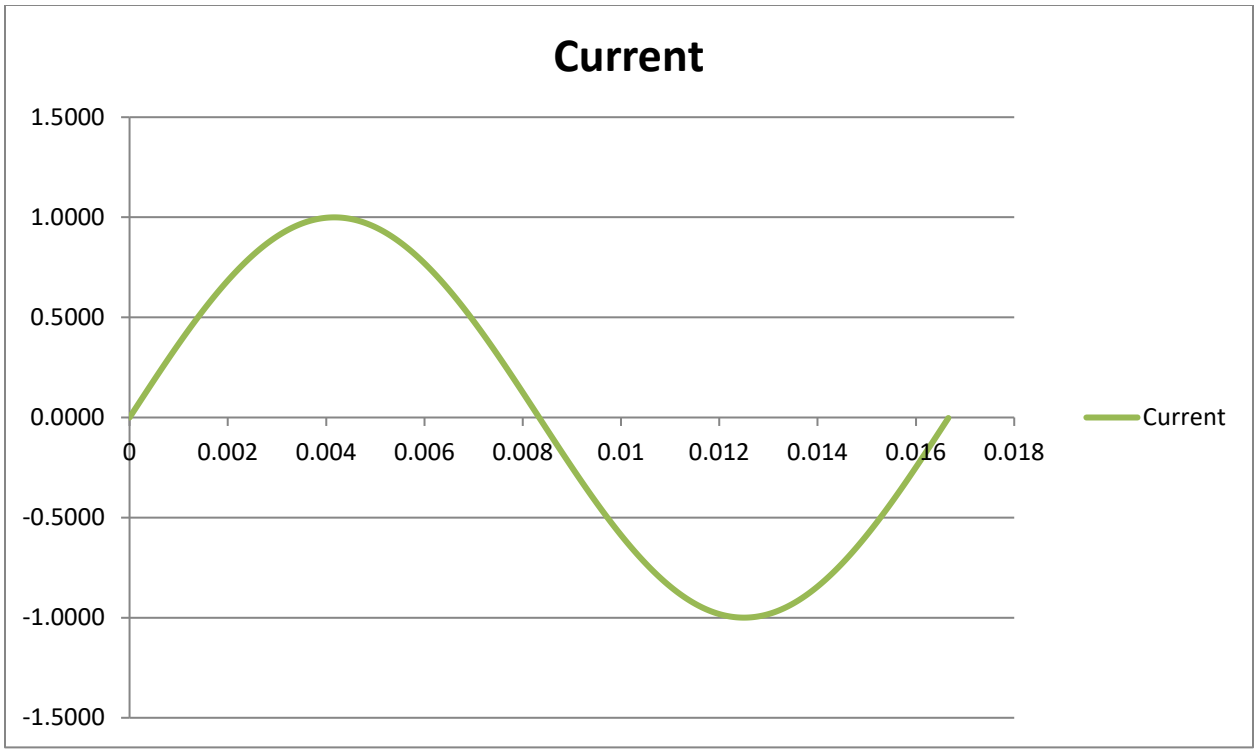

Figure 6. Voltage and Current in the Time Domain, V=0.707, I=0.707

It can be seen that, based on the earlier definition of apparent power (including the real and reactive quantities), instantaneous power is the product of *v* and *i* from Equations 5 and 6, as given in Equation 7 (Reference 7). Figure 7 shows instantaneous values of voltage, current, and power versus time. In the case of Figure 7, the voltage and current have rms values of 0.707 (1.0 peak) and are in phase with each other, $\mathrm{PF} = 1$ or $\theta = 0$. Power appears as a double sinusoid that has a maximum value of one and a minimum value of zero. This is important to note for the next part of this discussion. The average value of active power can be computed by Equation 1 and is shown as the horizontal line in Figure 8.

$$p = vi$$

Equation 7. Instantaneous Power

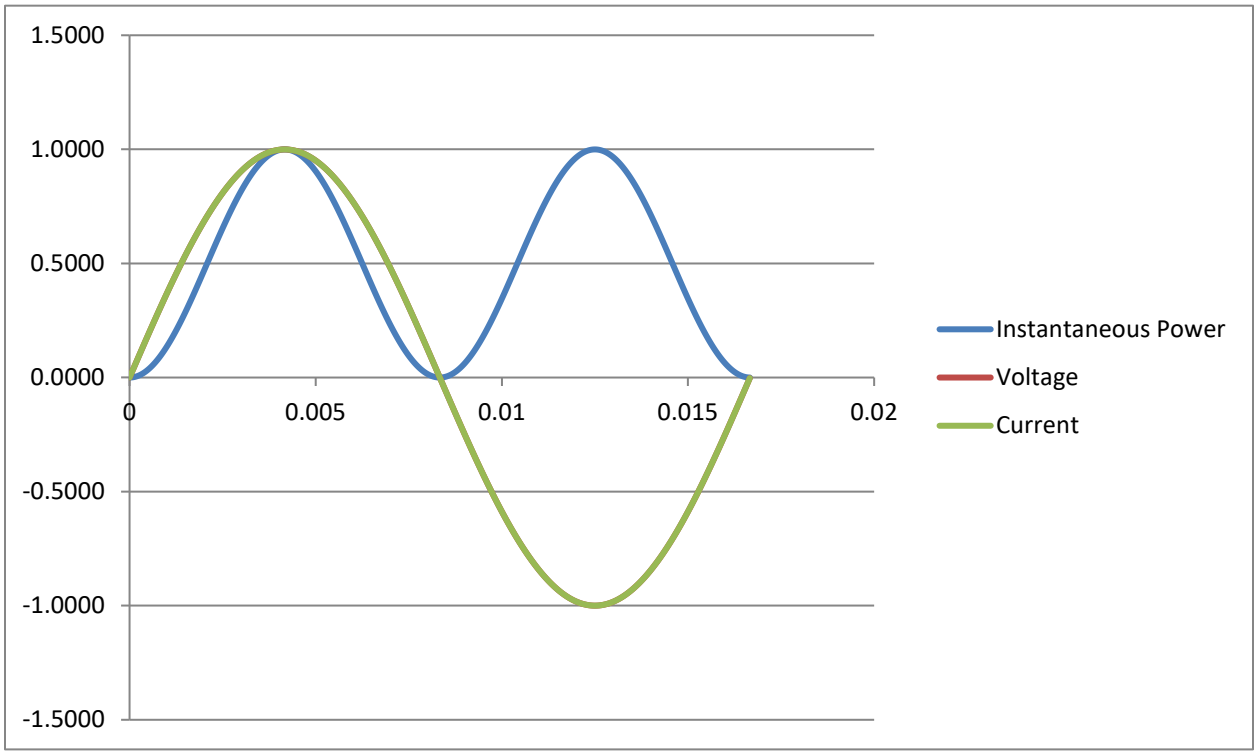

Figure 7. Instantaneous Voltage, Current, and Power, V=0.707V, I=0.707, PF=1

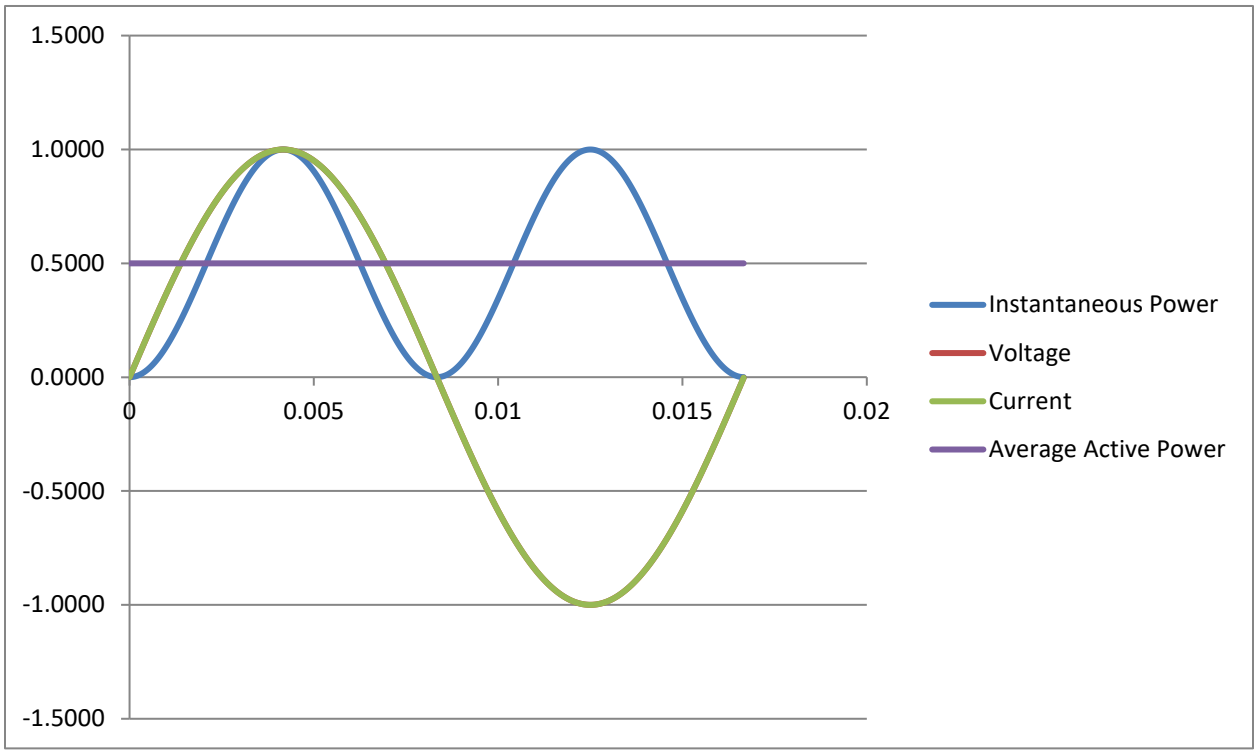

Figure 8. Instantaneous Voltage, Current, Power with Average Power, V=0.707V, I=0.707, PF=1

To make the discussion more interesting, Figure 9 has the same magnitude of voltage and current, but this time with angular displacement of 36.87° or a power factor of 0.8, $PF = \cos(36.87)$. Stated differently, the current is lagging the voltage by 36.87°. Note that the peak-to-peak magnitude of the instantaneous power is the same as Figure 8, but the minimum has now dropped below the x-axis by a value equal to the difference between the active power and the apparent power. Real power cannot be less than zero but instantaneous power can. Real power does the work and can be metered to be negative, but that is a matter of convention and is discussed later in this section. Furthermore, the average active power is reduced by the quantity offset below the x-axis.

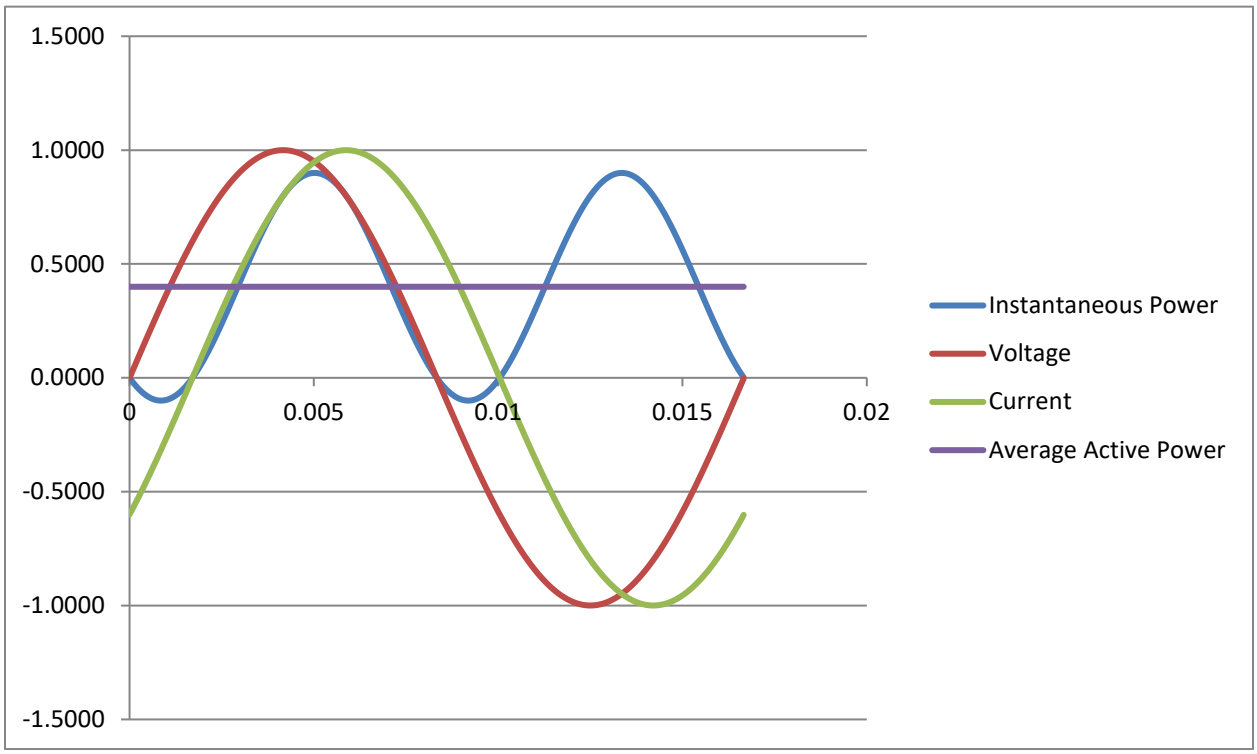

Figure 9. Instantaneous Voltage, Current, and Power with Average Power V=0.707V, I=0.707, PF=0.8 Lagging

To further visualize the concept, Figure 10 illustrates the resultant waveforms when a lagging power factor of zero is given. In this case, the active power is zero because this represents a purely inductive circuit and all of the power dissipated is reactive. Stated another way, the voltage and current magnitudes have not changed from the previous examples; only the phase angle between them has changed. The apparent power and reactive power are equal at 90°. No real power is dissipated. A question that might arise now is, "Can the PF be greater than one or less than zero?" It is important to reiterate that in Equation 4 (Reference 7), the numerator is the active power, which is the product of voltage, current, and the cosine of the angle between them. In reference to the power triangle in Figure 5, and by trigonometric identity, cosine is the

ratio of Adjacent divided by Hypotenuse. The adjacent side cannot be longer than the hypotenuse. Therefore, the power factor, the ratio of real power to apparent power, cannot be greater than one. In the case of less than zero, the inverse cosine of -1 is 3.14 (pi) radians or 180° the cosine of 180° is -1. The adjacent angle can be less than zero, but cannot be greater than 1 or less than -1. If an ideal purely inductive (or capacitive) circuit causes the current to lag (or lead for a capacitive circuit) the voltage by a maximum of 90°. "How is this possible?" The answer to this question is the crux of alleviating confusion in directional power applications. Pictorially, Figure 11 is the result of the current lagging the voltage by 180°. The power factor is equal to -1. This is explained in detail in the following section.

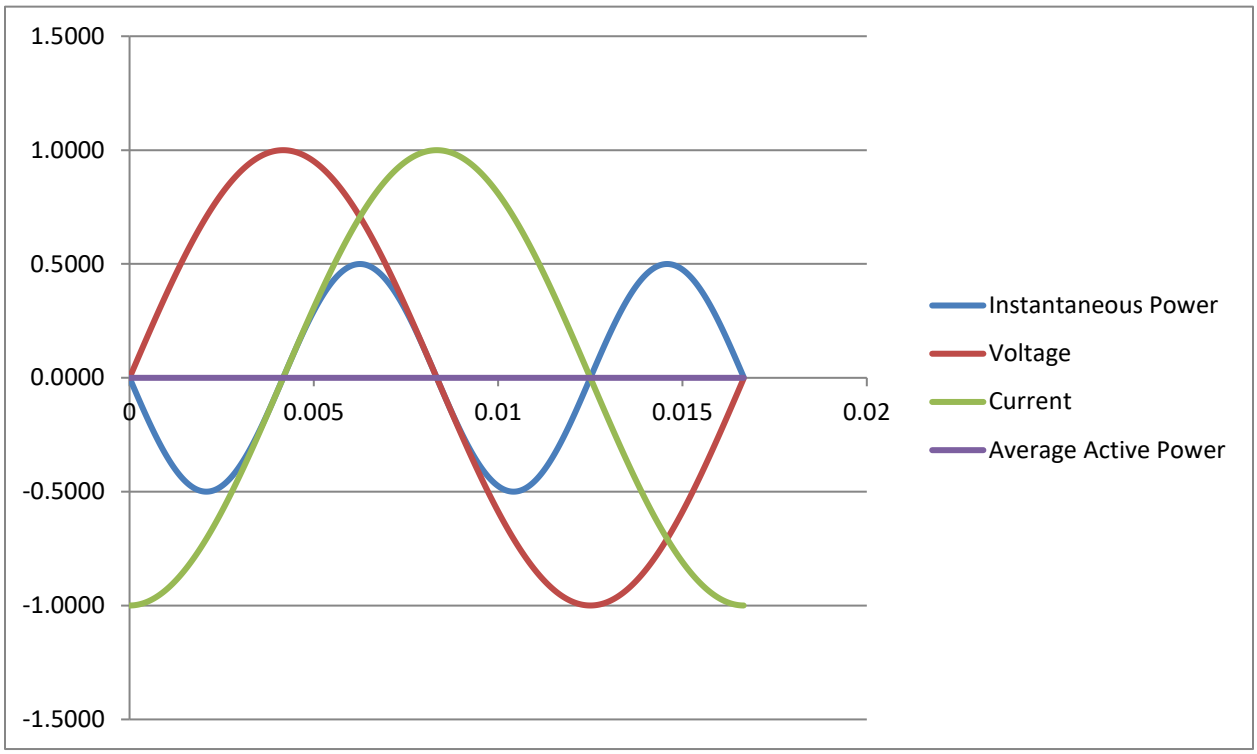

Figure 10. Instantaneous Voltage, Current, Power with Average Power V=0.707V, I=0.707, PF=0.0 Lagging

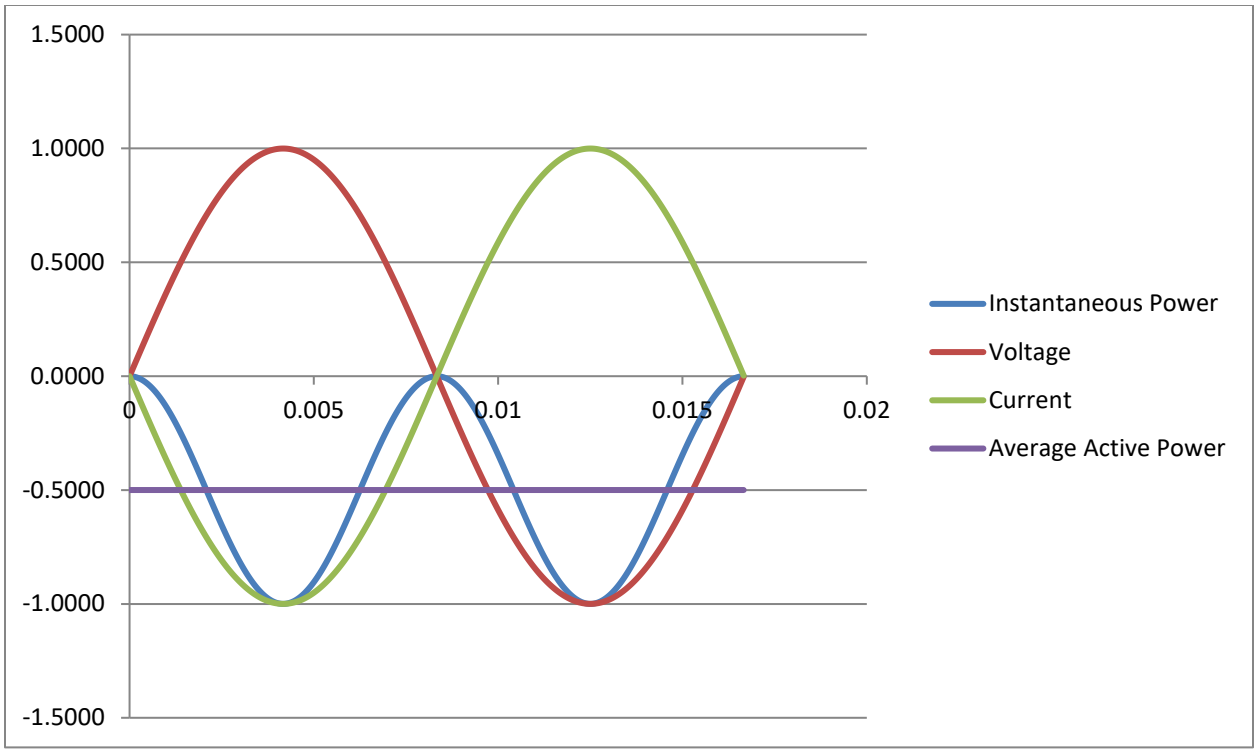

Figure 11. Instantaneous Voltage, Current, Power with Average Power V=0.707V, I=0.707, PF=-1 Lagging

While the previous discussion helps to visualize what power looks like, it is not how a relay *performs* the calculation of power. By virtue of the definition of rms, one cannot have a mean for voltage or current without an interval. To calculate power using rms quantities, a relay must look at what has already transpired to make its calculation. Thus, active power is further defined as the average value of the instantaneous power during the measurement time interval $\tau\ to\ \tau + kT$ as shown in Equation 8 (Reference 7).

$$P = \frac{1}{kT}\int_{\tau}^{\tau+kT} pdt$$

Where:

$T = \frac{1}{f}$ is the cycle time in seconds

k is a positive integer number

τ is the moment when the measurement starts

$P = VIcos\theta$ *instantaneous V and I

Equation 8. Active Power – Average Value of Instantaneous Power

The main point to understand about Equation 8 (Reference 7) is that active power describes what happened previously. The rms value was derived from one previous cycle and the period could be different depending on the relay algorithm. Further to the point, most modern numeric relays look at a previous cycle(s) and extract the fundamental frequency components of voltage and current before computing any rms values and power quantities. Relay sampling times and calculation algorithms vary in relation to how quantities are derived, but the end results are generally equivalent. Directional power relays of the

past operated on analog values and used analog integrators to achieve similar characteristics. The fundamental frequency components were not extracted and, in that way, modern relays are much different. Most analog industrial grade relays, marketed as directional power relays, do not actually calculate power. They might assume nominal voltage and look at current direction and current magnitude only. These types of relays are inadequate for use as directional power interconnection relays.

Utility companies require a utility grade relay at the PCC in most circumstances. Typically, a utility wants the PCC to operate on the 60-hertz value of active power, i.e. not average responding, which includes all harmonics. Most modern relays operate on the 60-hertz values. If there is a power quality concern about the protected equipment, the relay or a separate device could be used to monitor and store the harmonic distortion over time for evaluation by the utility. This distortion could be created by inverter output switching devices, for example. The utility might require that inverters comply with UL1741. Table 3 of IEEE 1547-2003 provides criteria for maximum harmonic distortion. In IEEE 1547, the harmonic distortion section is likely to be expanded, at least with further explanation, and UL1741 is likely to be referenced in the standard. The utility is mandated to maintain the entire system power quality, which can be affected by the interconnection of DER. Therefore, it will monitor power quality and the effect thereof when DER is added.

IV. Practical Considerations

In most cases, protective relays do not connect directly to the power system. Instead, they receive voltage and current quantities through intermediary devices, which are generally current transformers (CTs) and voltage transformers (VTs). The complete theory behind these devices is beyond the scope of this paper, but relevant practical topics are covered next.

As a practical consideration, the first topic is instrument transformer polarity. Because it was proven previously that the angle difference between the voltage and the current is critical to the calculation of power, so, too, are the phase relationships between the measurement quantities, i.e. observing proper polarity of all connections is of the utmost importance. The relay can only operate on the quantities presented to it, so if the connections are not representative of the actual power system under measure, then the relay cannot perform as expected. In fact, experience has shown that polarity errors are the leading cause of problems related to 32 protection. If a utility specifies a 32 element at the interconnection point, the chances are high that they will test to determine that it works properly in the form of a witness test. For a DER owner/developer, this means that if the relay is not measuring power correctly, the system will fail the utility witness test. Investigative work will have to be done, the problem will need to be remedied, and in most cases, a new witness test will have to be rescheduled. This creates additional time and expense for both parties. Thus, understanding of the proper connections of CTs and VTs is very important to the success of a DER project involving 32 protection at the interconnection point.

Polarity is defined in IEEE C57.13-2016 as the “designation of the relative instantaneous directions of currents in its leads. Primary and secondary leads are said to have the same polarity when at a given instant the current enters the primary lead in question and leaves the secondary lead in question in the same direction as though the two leads formed a continuous circuit.” (Reference 8, page 52). Also defined is the

way in which the instrument transformer terminals are delineated. H refers to the primary winding and X distinguishes the secondary winding. The terminals must also be marked with numbers corresponding to terminal designation e.g. H1, H2, X1, and X2 (Reference 8, page 22). Figure 12 depicts the proper nomenclature and instantaneous directions of current for a VT of additive and subtractive polarity (Reference 9, page 60, figure 3.4 a and b). Because CTs in existing switchgear are generally a “donut” or window type. How to apply the statements above may not be entirely obvious to someone unfamiliar with current transformers because there are no primary wires to connect. Rather, the primary winding is the cable around which the CT is placed. Figure 13 shows polarity (denoted as “X” for primary and secondary polarity) for a current transformer. Note that the direction of current flow is the same regardless of the polarity. The last point is especially important when connecting to a relay. To illustrate further, a typical window CT is pictured in Figure 14; the direction of current flow is shown as well. Remember that ac reverses polarity at the system frequency, so technically the polarity changes, in the case of the USA, 60 times per second. The instantaneous polarity of CTs and VTs is only critical because directional power (and other elements, depending on what is applied) rely on calculating the angular difference between voltage and current. If only current were to be measured, for example Timed Overcurrent (51), the polarity of the CT would be inconsequential. It is common practice with current transformers for the H1 polarity to face away from a circuit breaker, which also typically means away from the load. Figure 15 shows the CT/VT and relay connections for a common three-phase 32 application.

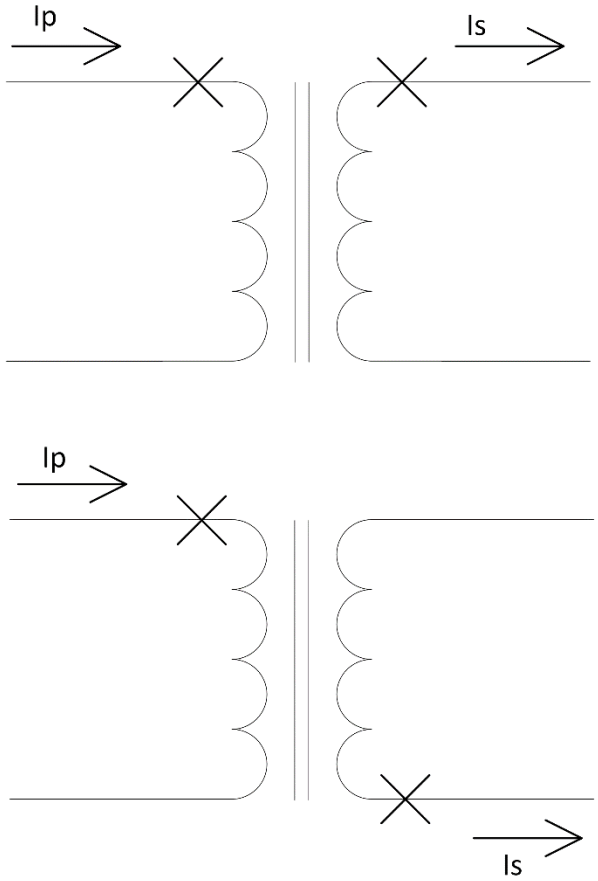

Figure 12. Voltage Transformer Polarity (redrawn from Reference 9)

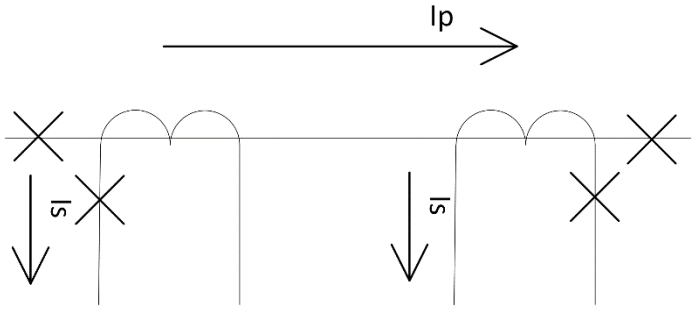

Figure 13. Current Transformer Polarity (redrawn from Reference 9)

Figure 14. Typical Window CT

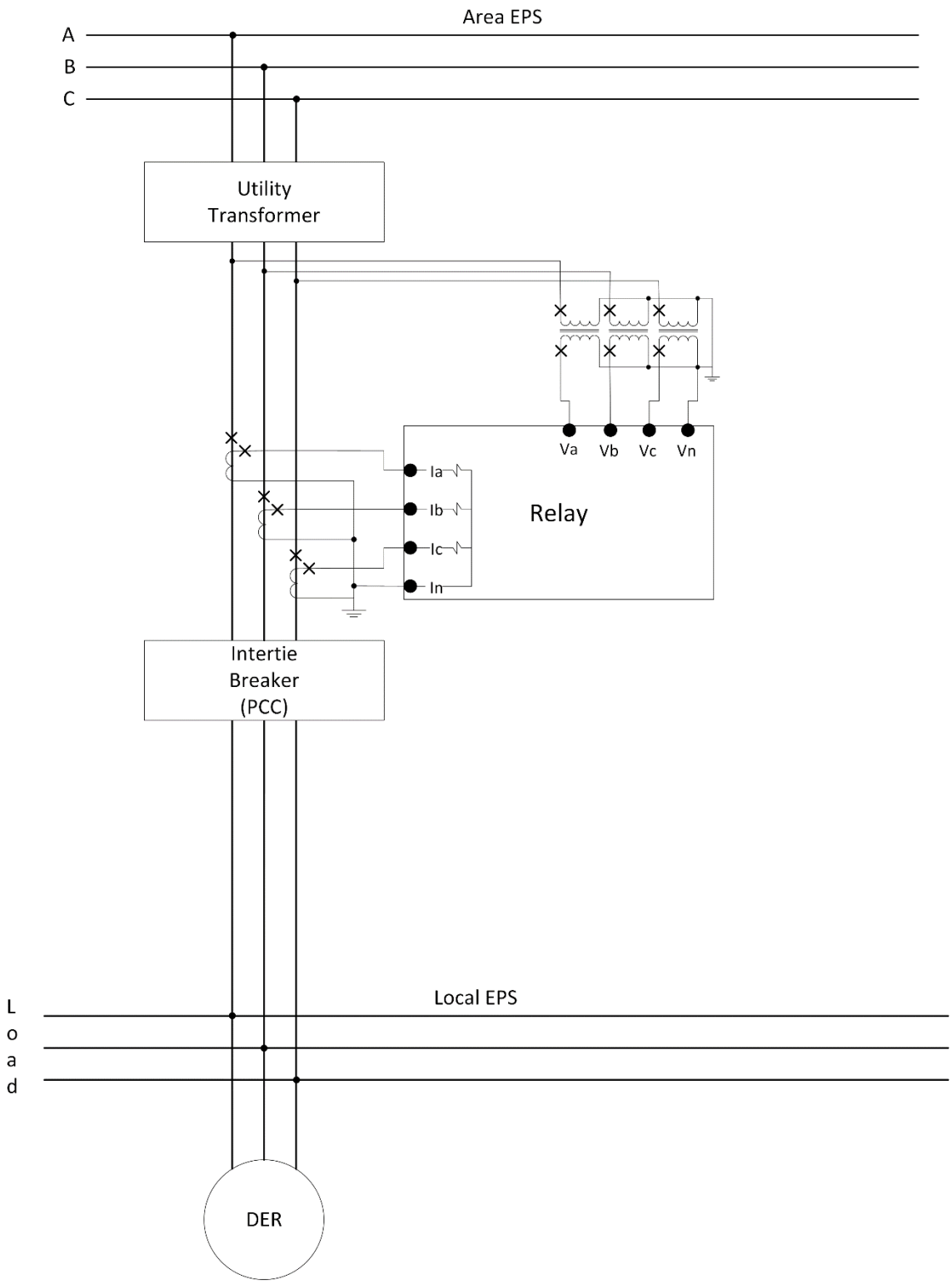

Figure 15. Common Connections for a Three-Phase 32 Application

After reviewing Figure 15, it is apparent how a simple wiring mistake could be made in the primary or secondary. It looks easy on paper, but the wires might connect through various terminal blocks, cross shipping splits in switchgear, and could be labeled or connected incorrectly at any point along the way. There are opportunities for connection errors on the primary and secondary sides of both CTs and VTs. There is also the chance that a mistake was made on a drawing. Therefore, even if everything is connected "correctly" per the drawing, the end result is incorrect. For example, in Figure 15 there is a wye-wye VT set, assuming this is three single-phase VTs wired in wye. For the primary, six terminals in groups of two, and four connections are to be made, which means there are 48 possible combinations for connecting just the primary terminals. The point at which the theoretical world and real world intersect introduces the possibility for errors.

Before discussing further the common CT and VT configurations for directional power relaying, the following explanation is given in regards to how a relay meters the associated values. IEEE 1549 provides the following reference. See Figure 16. Understanding this is key to identifying whether a relay is connected properly, assuming the relay follows the standard. Note that not only do CTs and VTs have polarity marks, the relay terminals also do. Common practice is to connect the wire from a transformer polarity to the relay terminal with the polarity marking, assuming that primary polarity is correct. Henceforth, reference made to this figure assumes wiring was connected with the proper polarity observed on the primary and secondary, unless otherwise stated.

Decoding Figure 16 is relatively simple. It is viewed from the standpoint of a source. The drawing corresponds to a standard Cartesian coordinate graph, but in this case (x,y) is replaced by (P,Q). The drawing also incorporates reference to the aforementioned power triangle. The convention is positive vars for inductive loads and negative vars for capacitive loads, positive watts for voltage and current in phase and negative watts for 180° out of phase. Further clarity can be achieved by referencing a unit circle diagram as shown in Figure 17. The unit circle diagram shows a circle with a radius of 1 and gives the values of Cos and Sin at different x,y coordinates. One idea that might be confusing in Figure 16 is the concept of 270°. The range of cos is from -1 to 1 (0 to 180°) and the period is 2π radians, the total circumference of a circle. Thus, it may be easier to consider the y axis in terms of +90° and -90°. Consider the example given in Figure 18, where the RMS voltage and current magnitude is 1 and the power factor is 0.8 leading. Thus, a representative triangle can be drawn inside the unit circle. See Figure 19. The apparent power is equal to 1 and is drawn from the origin to the edge of the unit circle at an angle of -36.87°. A line representing reactive power is drawn from the intersection of the apparent power and the unit circle to the x axis. The point at which the apparent power intersects the x axis is the magnitude of active power and is equal to the cosine of -36.87°, 0.8 W. Thus, apparent power can be drawn as a ray with an (x,y) or (P,Q) coordinate extending from the origin, which also describes the real and reactive power. This is where phasors help to explain Figure 16 and ultimately relay metering screens, because the apparent power is generally what is shown as a phasor in a relay P,Q graph. Consider that the hypotenuse of the triangles pictured in Figure 16 began at the origin. They would then indicate the phasor of the apparent power similar to the example

given in Figure 19. In general, Power Factor is metered in a relay as a quantity rather than the angle difference, that can usually only be seen in real time by viewing the phasor graphs. Figure 20 shows actual relay metering screens and phasor diagrams for a three-phase input with signals of 10 V, 1 A, at 0.8 PF leading. These quantities are consistent with Figure 16. Note the apparent power phasor, in this case total apparent power, direction indicates Quadrant 4 when correlated to Figure 16, which equates to positive active power flow, negative reactive power, and leading vars.

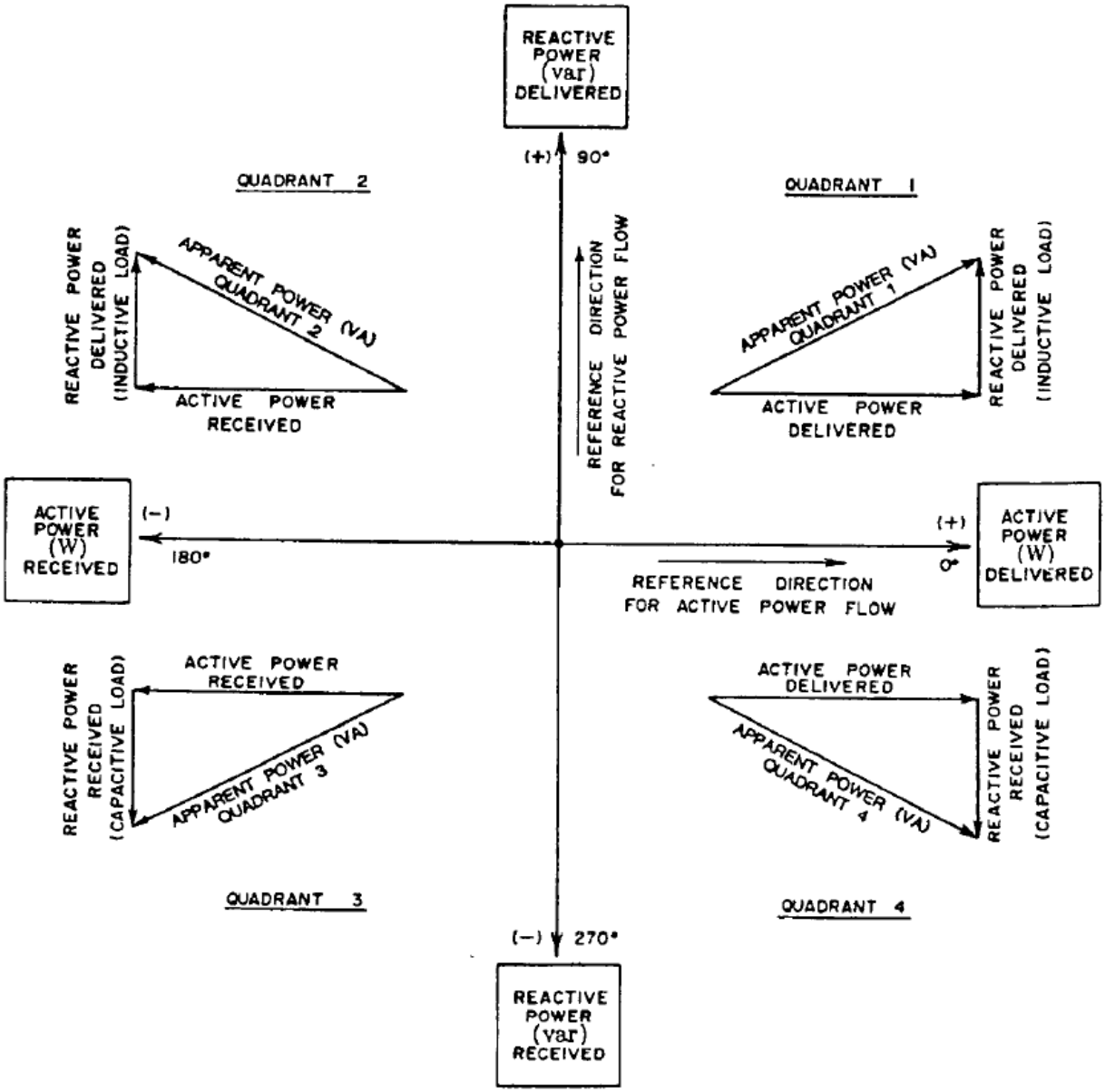

Figure 16. Four Quadrant Power Flow from IEEE 1459

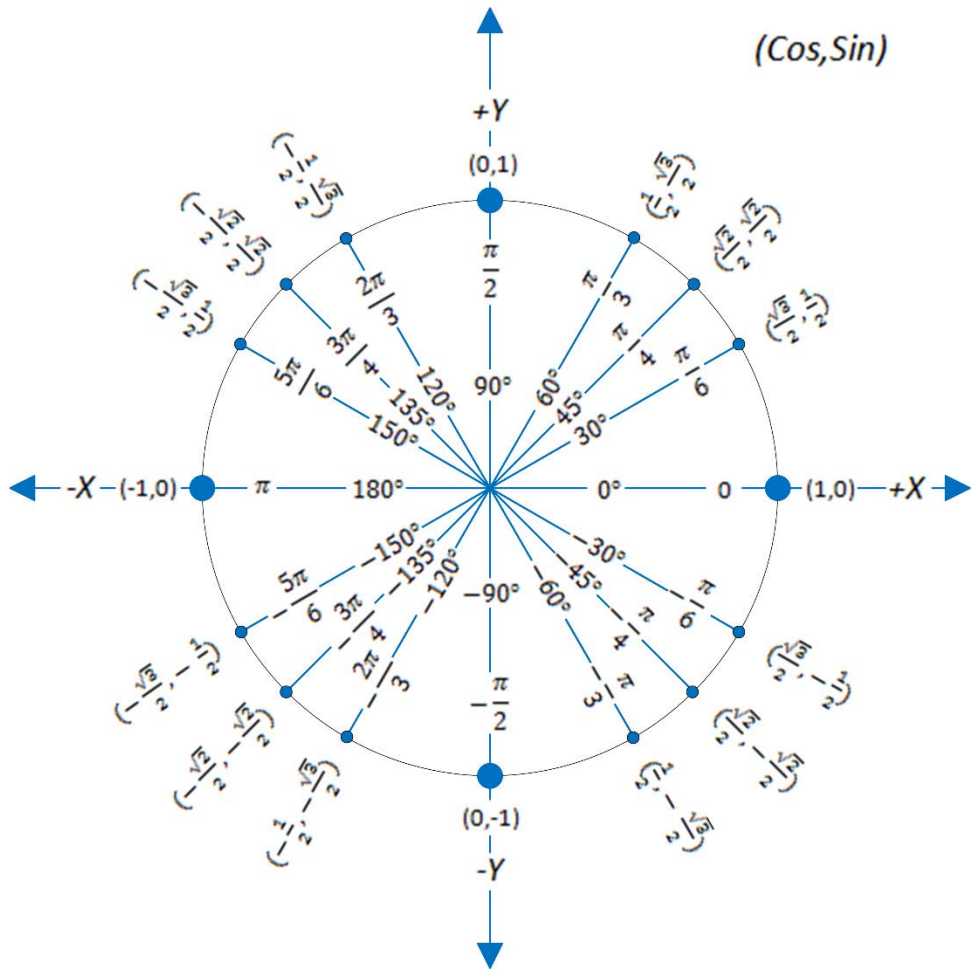

Figure 17. Unit Circle Diagram

Consider the relative position of the voltage and current phasors shown in Figure 20. The relay must have a reference phasor in order to make everything else relative to that phasor. In this case, A-phase voltage is the reference. Per convention, when the A phasor is at 0°, the B phasor is at 240° and the C phasor is at 120°. In Figure 20, the current has been shifted by 36.87°, not -36.87°. This can be a point of confusion. The cos of 36.87 and cos of -36.87 are the same, 0.8. Leading and Lagging are simply a matter of convention. To add to the confusion, the current phasors rotated counterclockwise which is the opposite of the direction of change (clockwise) for the apparent power phasor. The reason is that the apparent power phasor uses the complex conjugate of the current phasor given by Equation 9 (Reference 7). This is why lining up the apparent power phasor to Figure 16 is arguably the easiest way to understand what the relay sees. To complicate the matter even further, some relay test sets used to test the relay or investigate the metering values, and some relays, assume that the six o'clock position is +90°, not 240°. As an example, for a relay that uses the standard convention of metering A-0, B-240, C-120, a test set for which +90 is at the six o'clock position requires that, to get correct phase sequence for voltage (assuming wye-wye sensing, angles of A-0, B-240, C-120), one must enter the angles as A-0, B-120, C-240. Thus,

shifting current angles to obtain needed PF values can be doubly confusing. It is imperative to know the convention used by the relay and test set. Assuming the relay is properly programmed for the system to which it is connected, a quick check of the negative-sequence voltage and current-metered values can be used to determine if the phase sequence is correct. If it is, the negative-sequence value will be very low for a balanced system and, conversely, very high if the sequence is reversed. Note that the apparent power will not change based on phase sequence, but predicting the test values for angular difference requires understanding the angle convention used. The apparent power phasor can be used to dispel any confusion about leading or lagging. An alternative check is to trigger a manual oscillography record, if the relay is equipped to do so. From Figure 21, it is clear that the current is leading the voltage and matches up with the values observed in Figure 20. Thus, several methods are available to confirm understanding of the information provided from the relay.

$$S = P + jQ = V(I*)$$

Where:

$\mathrm{V} = V\underline{/0°}$ is the voltage phasor

$\mathrm{I} = I\underline{/-0}$ is the current phasor

$\mathrm{I}* = I\underline{/0}$ is the complex conjugate of the current phasor

Equation 9. (Reference 7)

As the name implies, a directional power relay is concerned with the direction of power flow, and, in essence, the apparent power phasor tells that story. Consider that forward power is defined as positive watts and positive and negative vars (lag/lead). Reverse power is defined in Figure 22 by +90 and -90 (270) and would have negative watts and positive or negative vars, i.e. not 0-180. Therefore, in terms of a typical utility-type generation system, normal loads would result in apparent power phasors in Quadrants 1 and 4. If the direction of real power is reversed for a reason such as in synchronous generation upon the loss of the prime mover, the generator is being driven similarly to a motor; the apparent power phasor would most likely be in quadrant 2 because the generator would be an inductive load to the system, so there would be negative watts and positive vars. In the case of a DER facility, upon a loss of utility power, the on-site generation would cause the export of power and result in an apparent power phasor in Quadrants 2 or 3, depending on the load. An apparent power phasor could also point to Quadrants 2 or 3 if the polarity of the VTs and CTs are not correct, or if the relay is set up for an incorrect sensing type, for example, the relay is set up as three-wire delta for use on a wye-wye system.

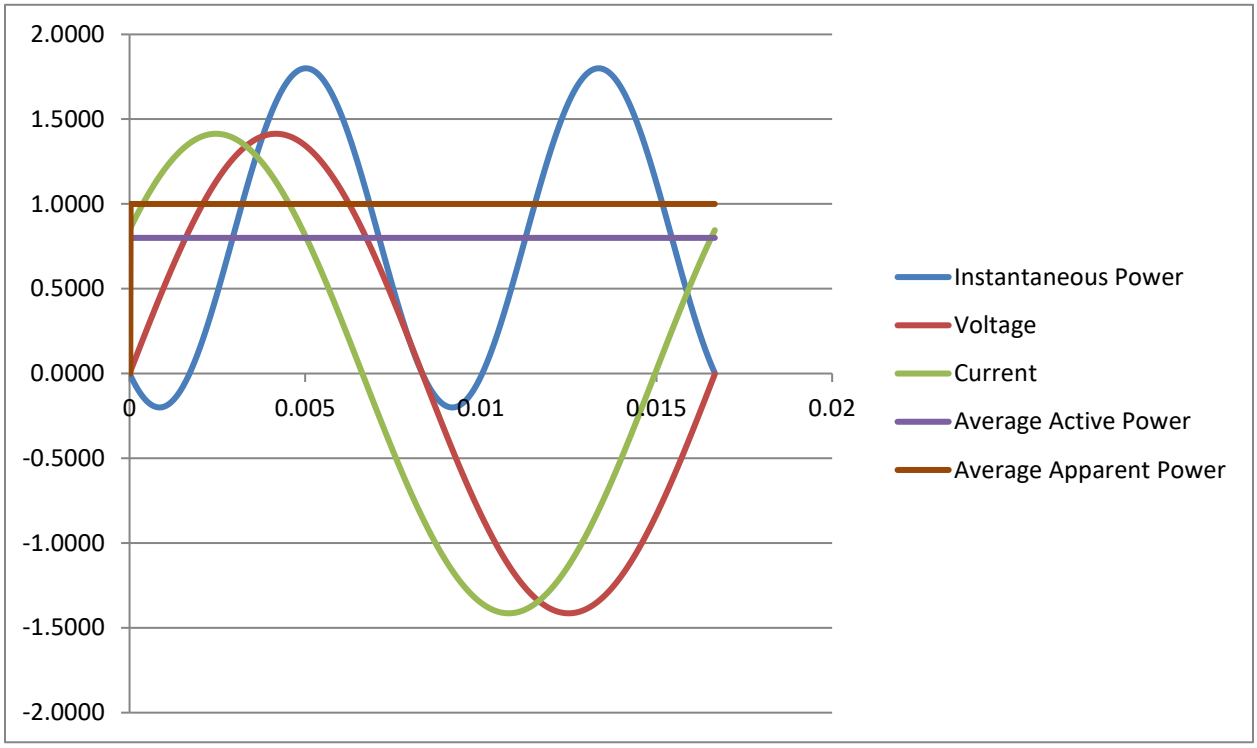

Figure 18. Instantaneous Power, V=1, I=1, PF=0.8 Leading

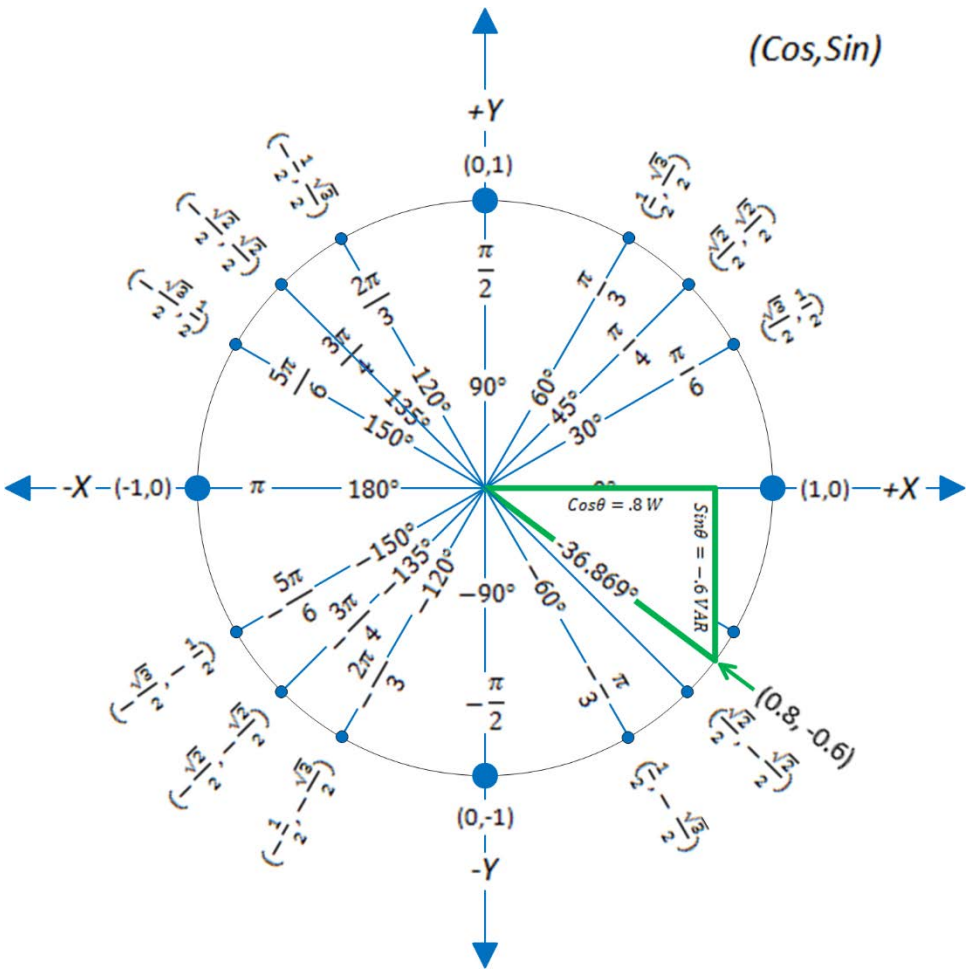

Figure 19. Unit circle with Resultant Triangle

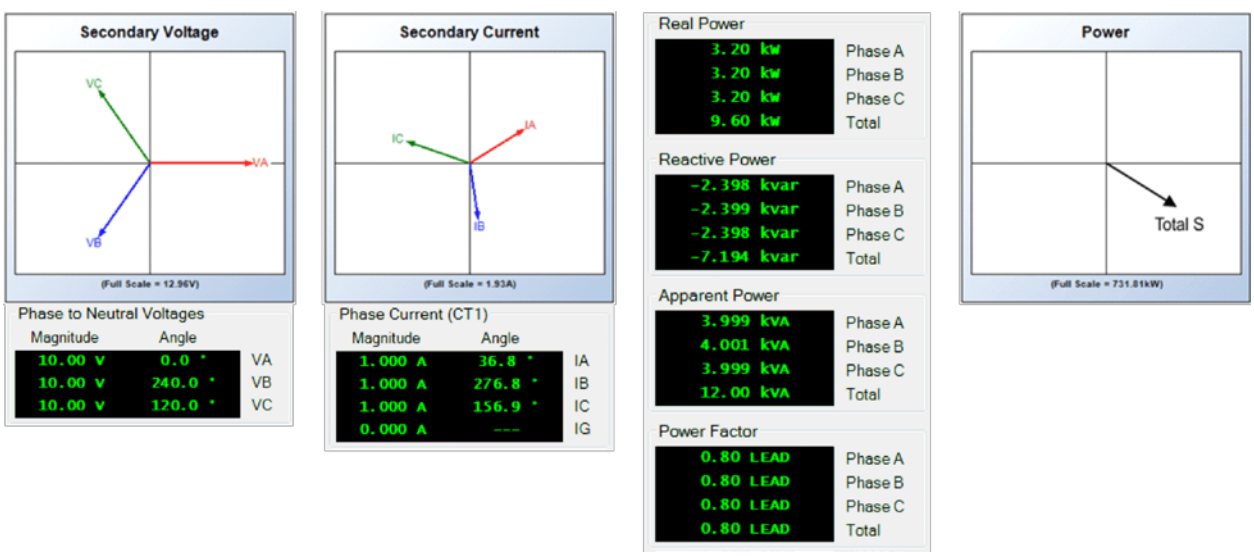

Figure 20. Relay Metering Screens and Phasors for a Three-Phase System with V=10V, I=1A, PF=0.8 Leading

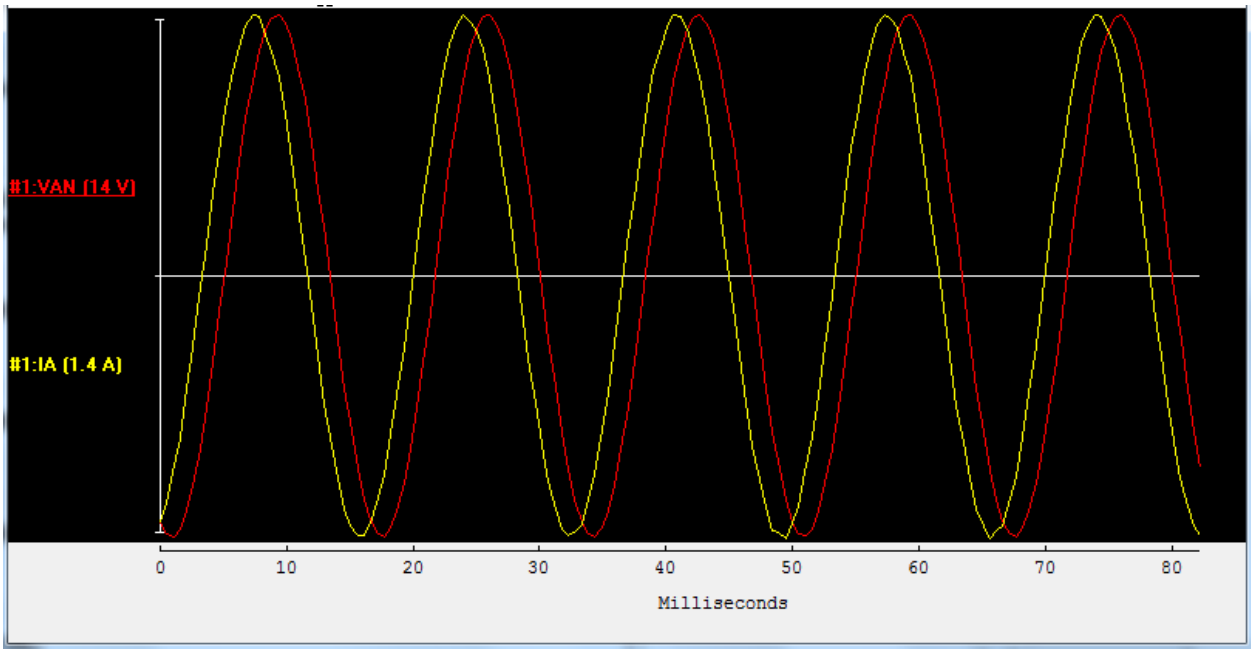

Figure 21. Oscillography record showing A-phase for V=10V, I=1A PF=0.8 Leading

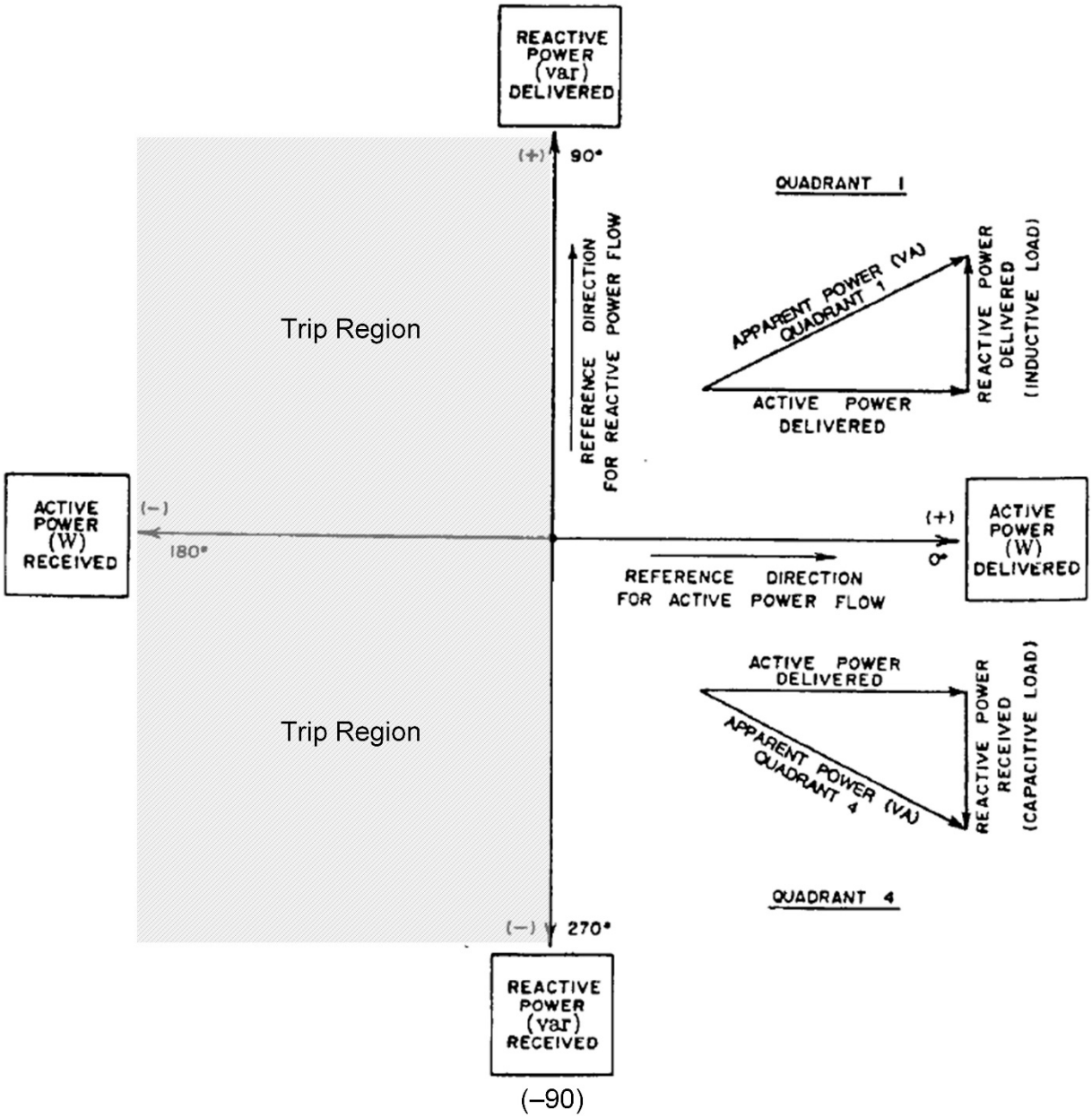

Figure 22. Four Quadrant P/Q with Trip Region +90 / -90

There are three common VT configurations and two common CT configurations for directional power applications. First, the connections for a single-phase CT and VT are shown in Figure 23. Make note of the polarity marks. Figure 24 plots the instantaneous values for this circuit with a 0.8 lagging power factor and Figure 25 shows the relay metering phasors for this connection. As previously mentioned, the most common error is incorrect CT polarity. Figure 26 shows a connection error. The resultant phasor values are given in Figure 27. It is important to note, as discussed above, there are two chances to have the CT polarity incorrect, in the primary and in the secondary. Occasionally the question is asked, “Where

are the CTs physically located?" The answer is that it depends on the system. For 32 DER purposes, it also matters where the designated PCC is located. The physical placement of the CT defines the zone of protection. A common location for CTs is on the bushings of transformers. In medium-voltage switchgear, CTs are generally behind the line stabs behind the shutters and in low-voltage breakers mounted on the breaker itself. If interpreted properly, a good electrical drawing provides some clues. A bushing CT is identified differently than other CTs. See Reference 11 for more information. Most of the time, if DER is added to a facility, the CTs are already fixed in relation to the primary. Adjustments may need to be made with the secondary wiring if something is incorrect. If new equipment is purchased as part of the DER project, CT polarity should be confirmed as part of the commissioning process. It is not entirely uncommon for switchgear equipment to be shipped with the primary CT polarity flipped. One handy tool in numeric relays is the ability to flip the CTs in software or reverse the power metering quantities if one discovers an error after the fact, or in any case for which rewiring is not a good option.

For completeness, with proper CT polarity observed, Figures 28 and 29 depict respectively, with the VT primary flipped, the connections and the phasor representation of the result. Note that Figure 29 appears the same as Figure 27. This is because the A-phase Voltage is the reference in the relay. It always appears on the x-axis in the positive direction. Where things get even more interesting is in the case of CT and the VT polarities that are both flipped. The result is the same as Figures 24 and 25 because the angle difference between I and V is the same. Only the instantaneous polarity has changed, but for both.

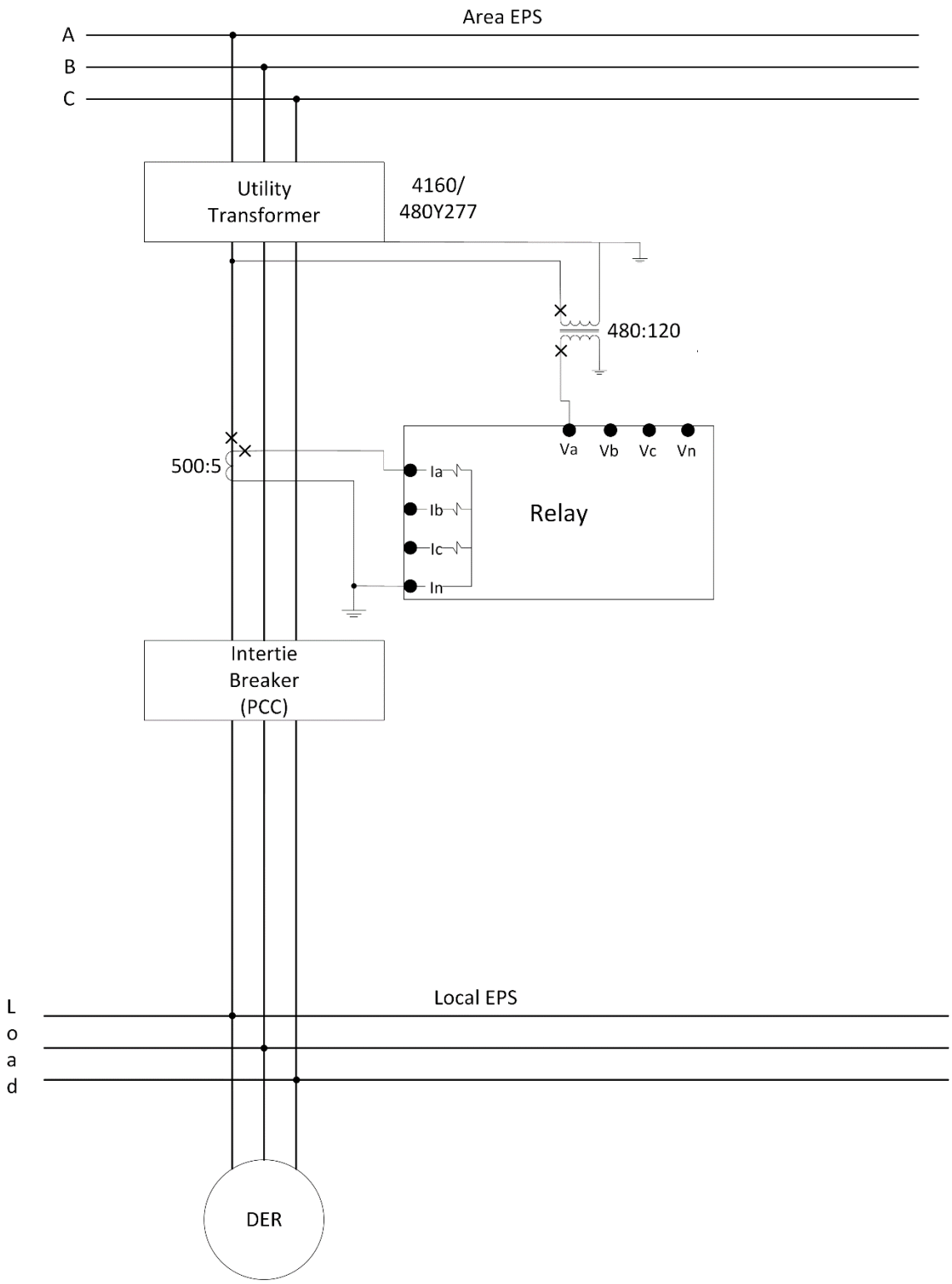

Figure 23. Single-Phase Connection

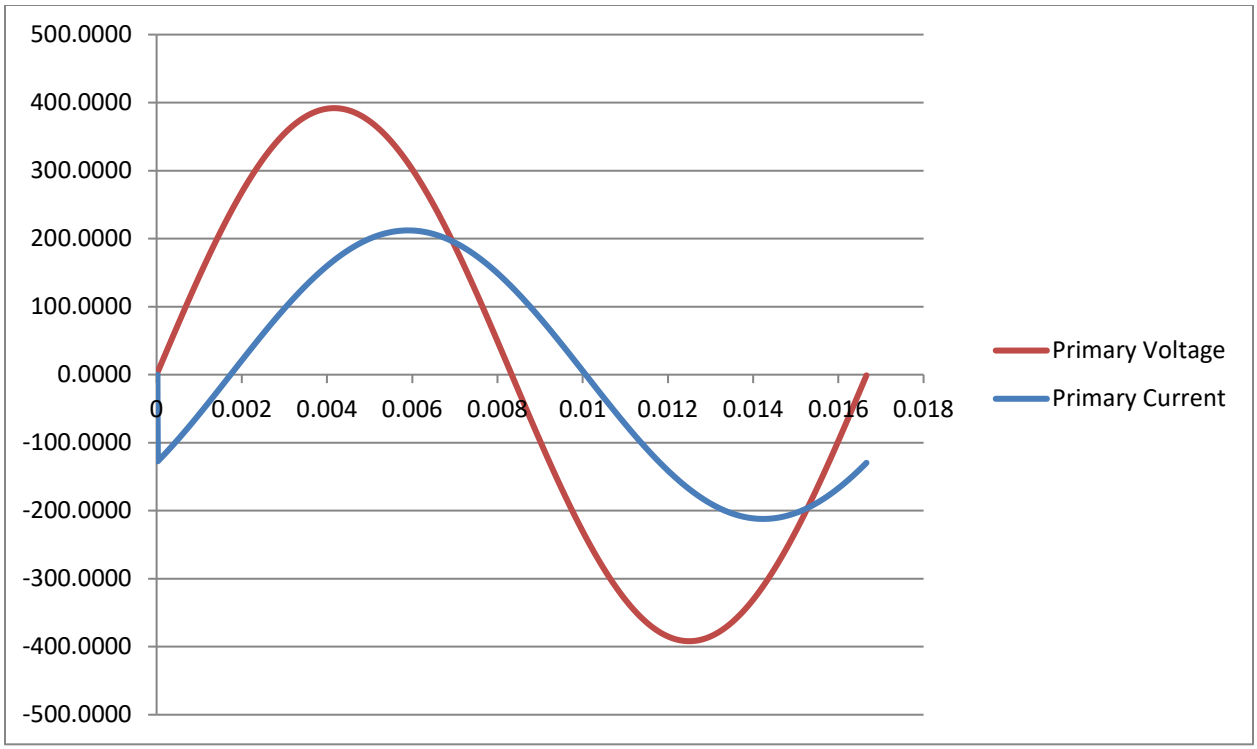

Figure 24. Instantaneous Values, PF=0.8 Lagging

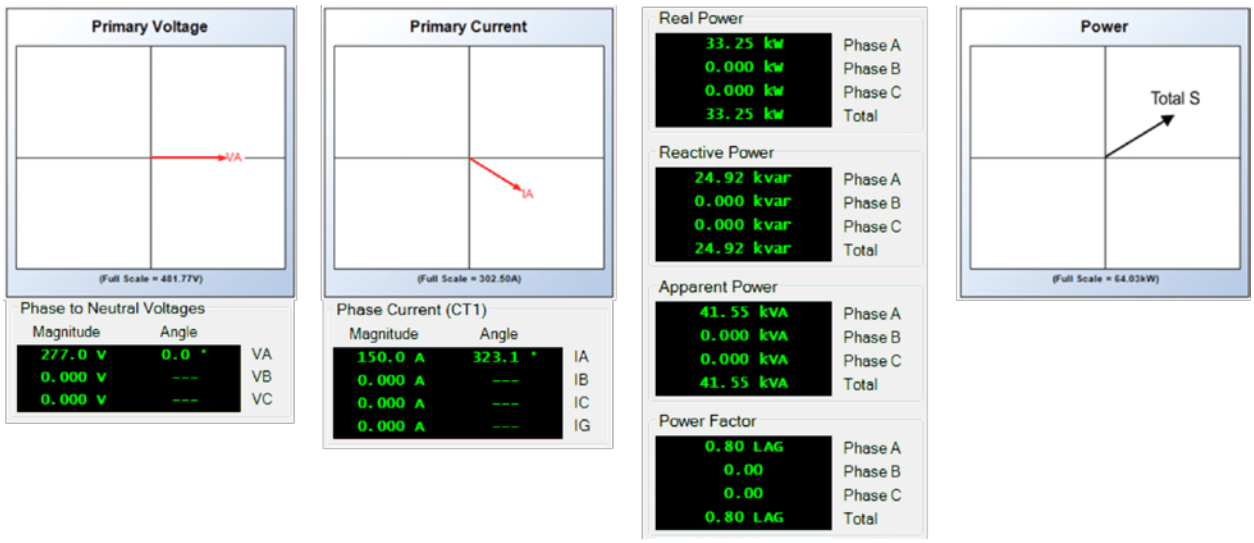

Figure 25. Relay Metering Screens and Phasors, PF=0.8 Lagging

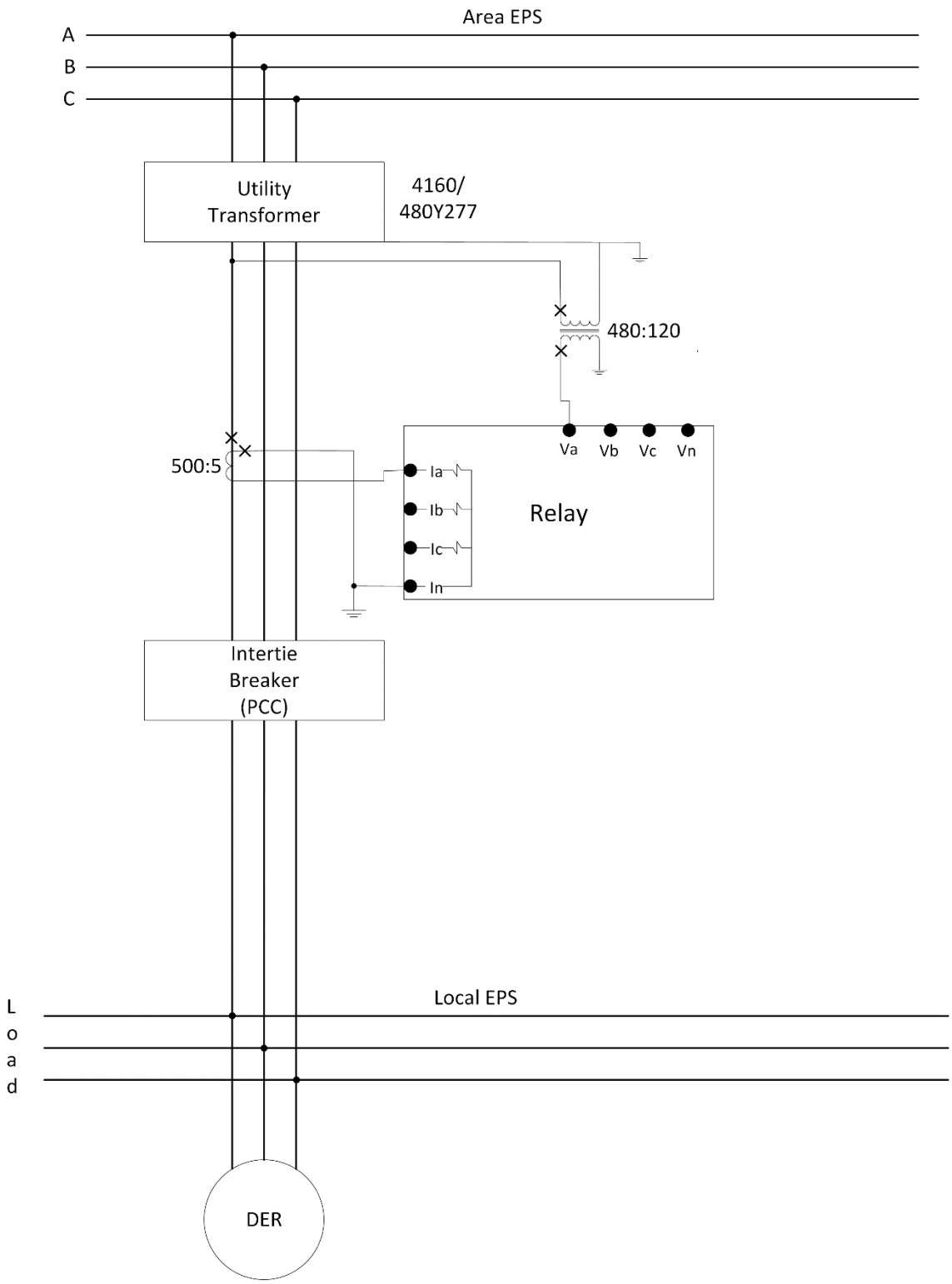

Figure 26. Single-Phase Connections – CT flipped.

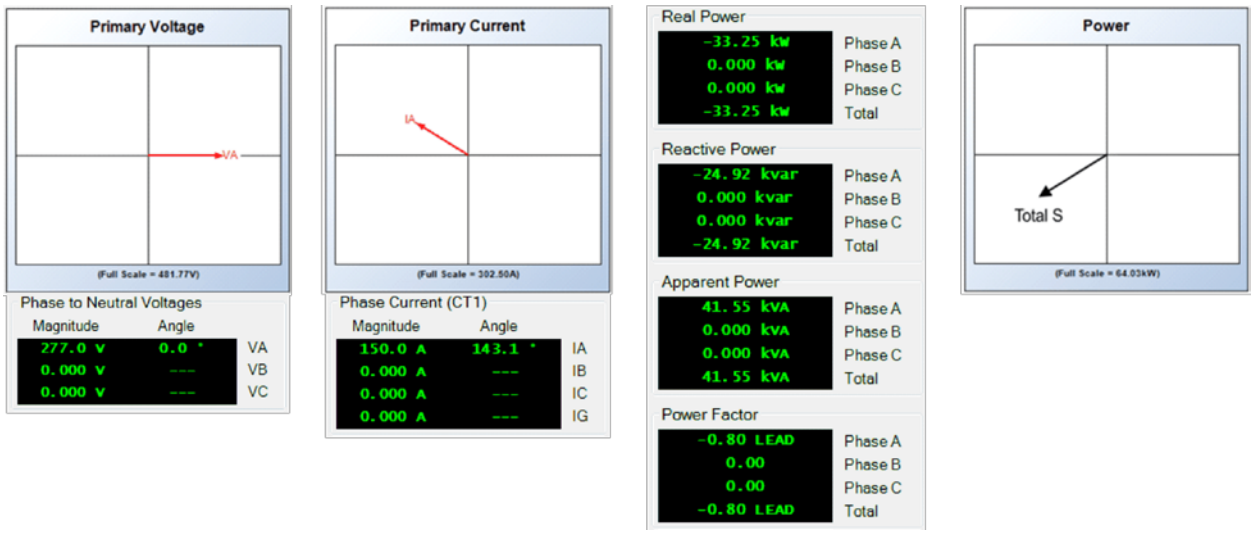

Figure 27. Relay Metering Screens and Phasors, PF=0.8 Lagging – CT Flipped

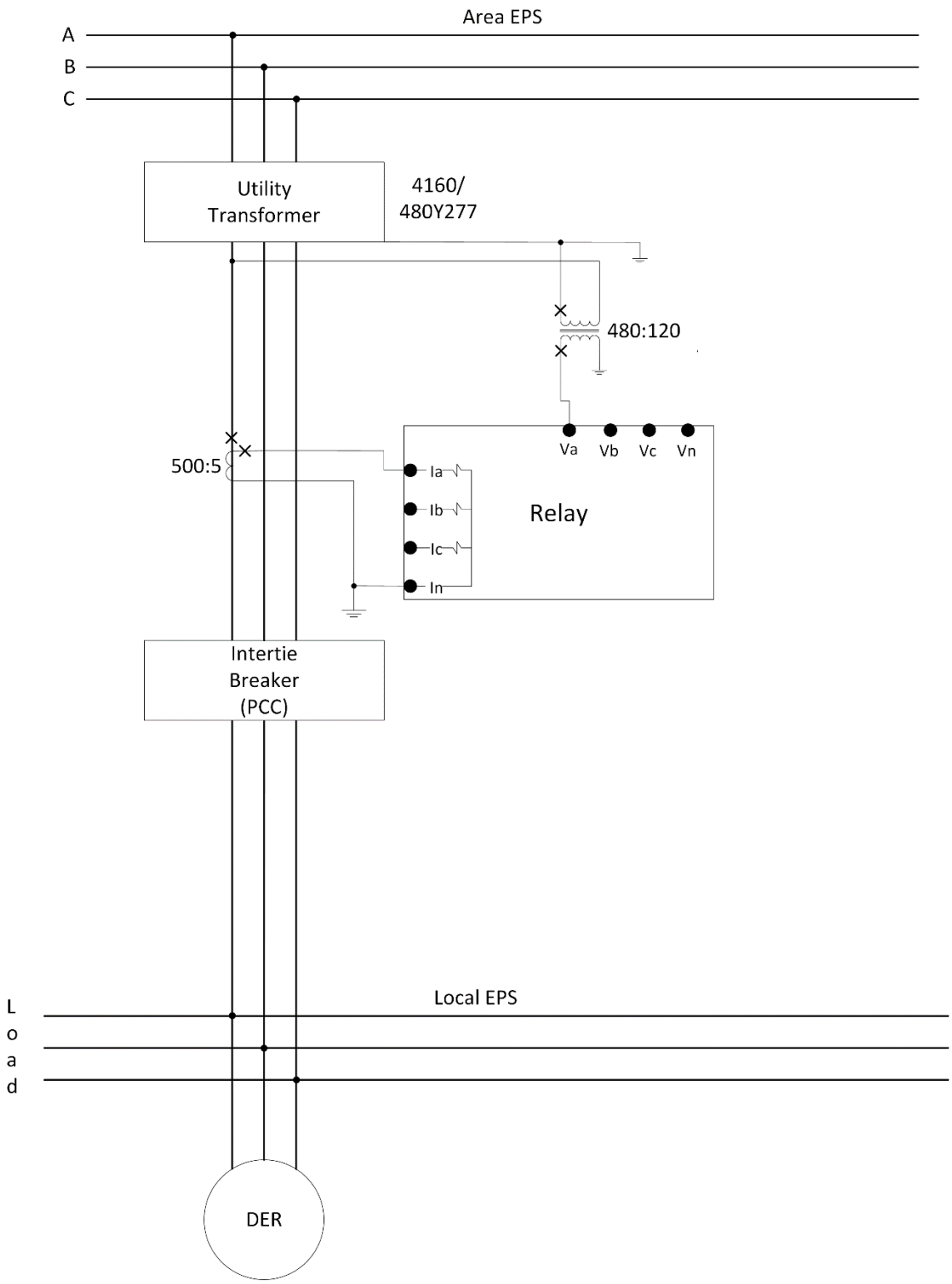

Figure 28. Single-Phase Connections – VT Flipped

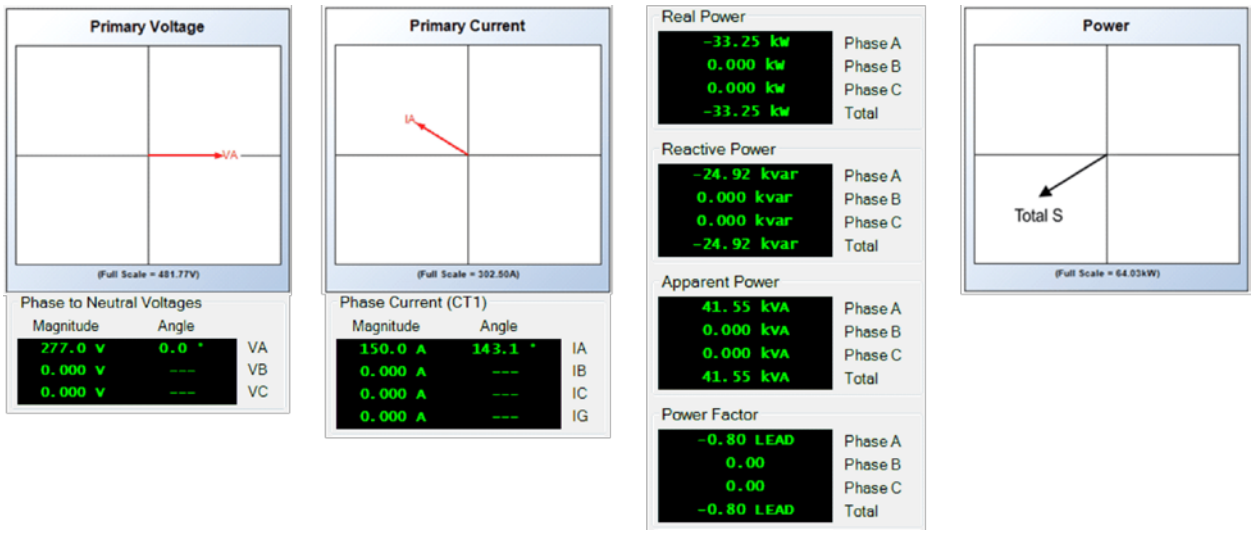

Figure 29. Relay Metering Screens and Phasors, PF=0.8 Lagging – VT Flipped

Three-phase systems are more complex, but most relays calculate per-phase values of power. Total power values are simply the sum of the phase values. Therefore, the metered values of each phase can be checked and a determination can quickly be made using the principles applied from the previous single-phase examples. If all of the CT and VT polarities are flipped, the convention of placement and drawing is broken, but the operation for directional power is the same. There are two common three-phase connections for VTs, wye-wye (Figure 30) and open-delta, also called 3-wire, delta (Figure 31). When using 3-wire, delta, line-to-line values are all that the relay is given. Most relays derive and meter the phase-to-neutral equivalents from those line-to-line values, which make the use of the above procedures convenient. The standard CT connection type for applications involving 32 protection is wye-wye. There is one other connection type, the so-called "two watt-meter" connection, but it is no longer prevalent in use today. It involves use of a 3-wire, delta VT and two CTs as shown in Figure 32. In most cases, wye-wye sensing is the preferred connection for VTs and CTs.

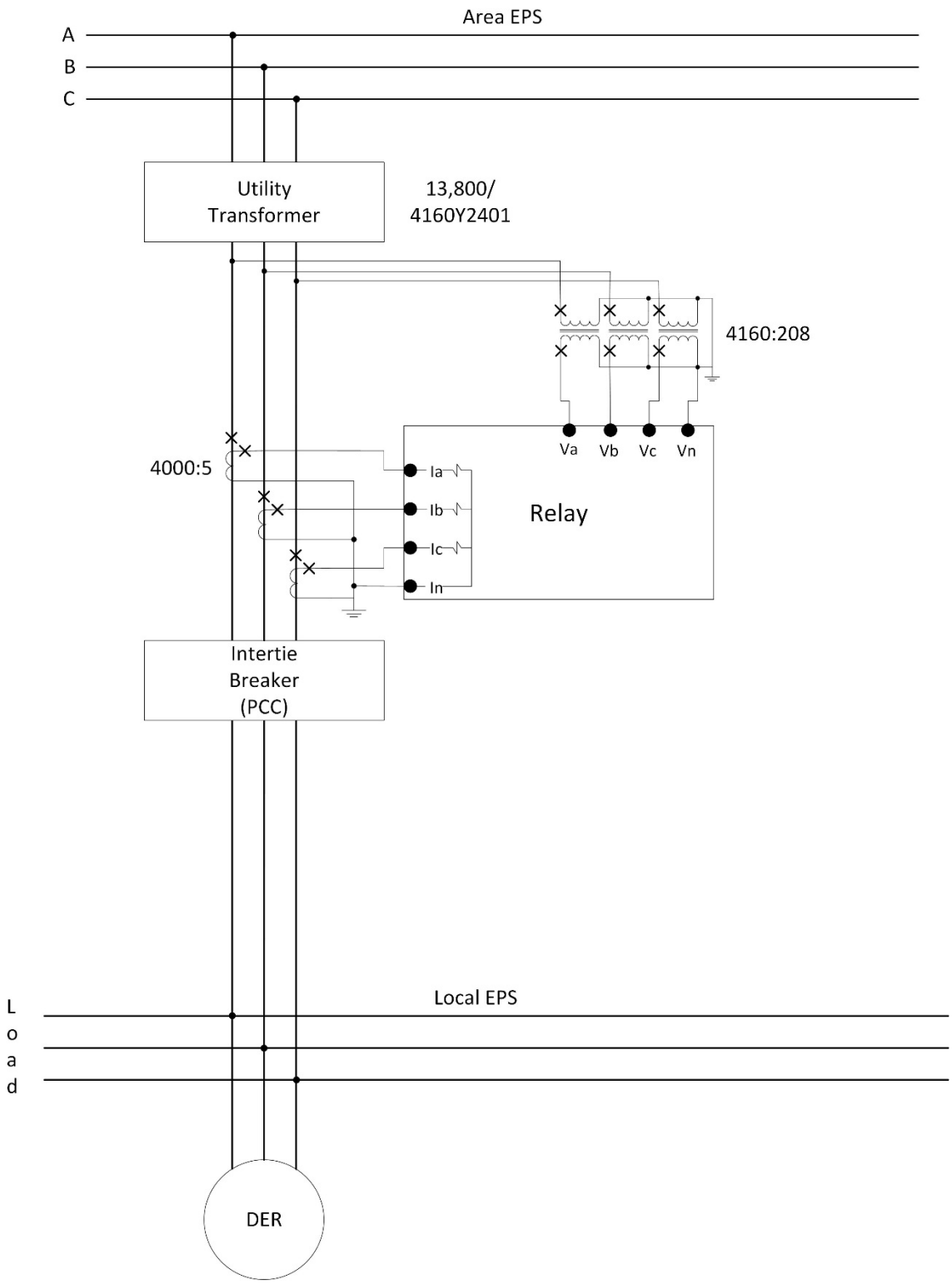

Figure 30. Connections for Wye-Wye VTs and Wye-Wye CTs

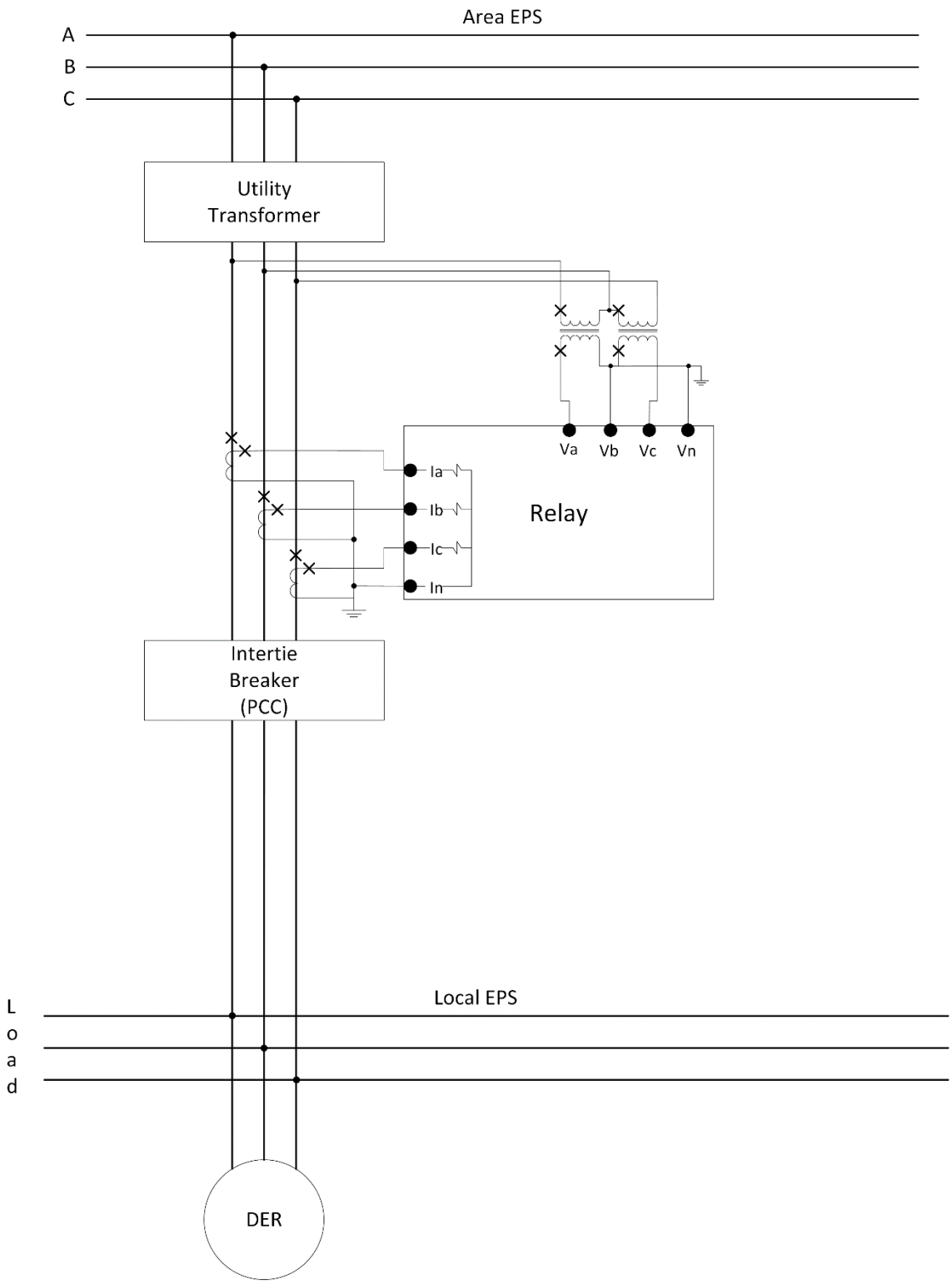

Figure 31. Connections for 3W Delta VTs and Wye-Wye CTs

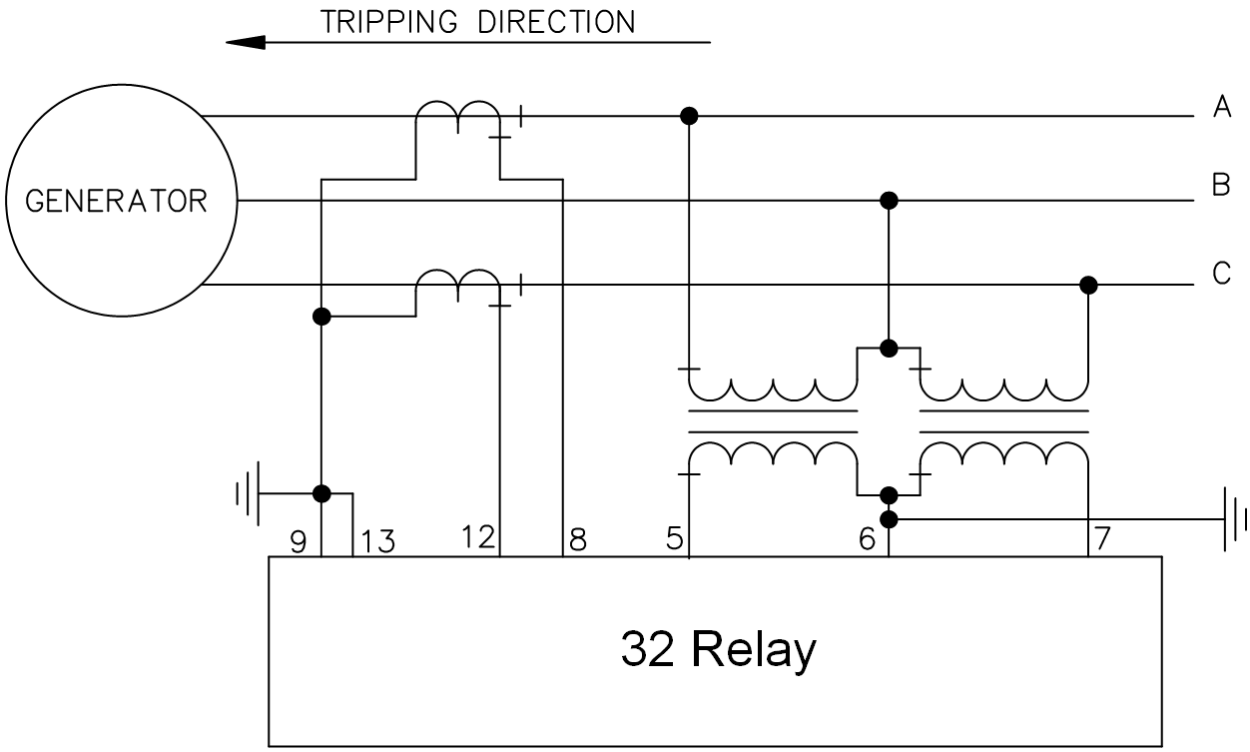

Figure 32. Connections for "Two Watt-Meter"

V. Application Details

The requirements and settings for a 32 installation vary widely depending on the utility's philosophy. Some have a fixed maximum export, while others might require a setting based on the percent of total available generation. As previously mentioned, the 32 Directional Power relay may not be installed as part of anti-islanding detection. It may be installed to ensure that compliance of a net-metering agreement is maintained, a setting for which might be 110% of agreed upon export with a time delay of several minutes. Usually, the settings for the required directional power are provided in the interconnection agreement.

A misconception still exists in the DER community that reverse power relays are used to detect faults on the utility system. This is not the case as mentioned earlier in this paper. Excluding net-metering, the reverse-power detection is for anti-islanding protection. Many faults are highly reactive in nature and may dissipate very little real power (Reference 14, page 8). Measurement errors in CTs, VTs, and relays complicate the accurate detection of directional power as the power factor approaches 0.0, or +90 to -90. These are only two details that make directional power relays inadequate for fault detection. There are other reasons beyond the scope of this paper. See Reference 14 for more information.

One problem that can arise when DER is added to an existing facility is an inability to meet the maximum reverse export requirement of the interconnection agreement with the use of existing CTs and VTs. Consider that a utility needs a reverse power relay to trip if the facility exports 25 kW. Study of the system in Figure 30

indicates CTs with a 4000:5 (800:1) ratio and the VT has a nominal voltage of 120 V phase-to-neutral, and the system voltage is 4,160 V; thus, the VT ratio is 34.67:1. Consider that the directional power relay offers a minimum setting of 1 W secondary and is accurate to ±2 W. Because the minimum setting is 1 W, the minimum relay setting sensitivity can be checked by observing the product of the VT and CT ratios, e.g. $800 * 34.67 = 27.73 kW\ primary$. Without even considering the accuracy of the relay, VTs, and CTs, it is apparent that this relay cannot meet the 25 kW export limit set by the utility, or can it? CTs are sized and installed to perform in such a way that, in part, they can respond to faults, which may be many magnitudes higher than the nominal rating. As such, the ratio is adequately high to the point that it might be unfortunate for sensitive reverse-power settings. However, there is another way to accomplish the task. If the capacity of the DER to the facility in question is such that it does not exceed normal plant loads, the relay can be programmed to use a minimum import setting. See Figure 33. In effect, this method allows the reverse-power requirement to be met.

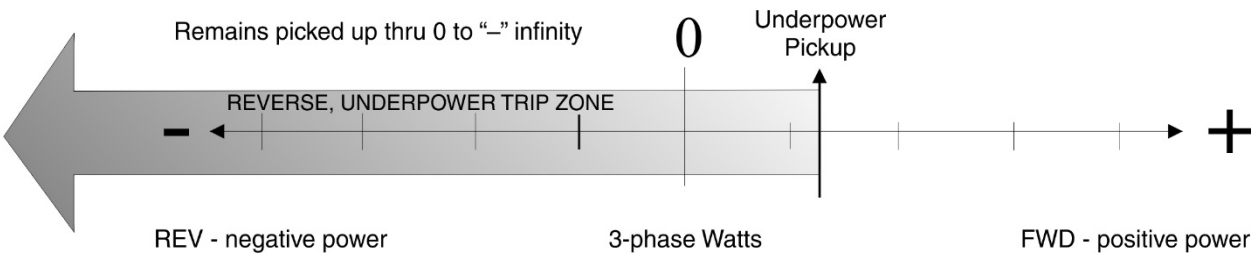

Figure 33. Relay Minimum Import

VI. Conclusion

In today's distributed environment, DER developers, owners, and utilities hold stakes in how power will be consumed and delivered in the future. Utility requirements exist for safety and liability reasons that are sometimes not entirely obvious, such as equipment damage to an adjacent EPS during an island condition. Often, these requirements are the result of applying reliable engineering practices and studies. DER owners and developers who wish to interconnect can contact state regulatory authorities in the event that they feel their request is unjustly denied or curtailed. That evens the balance of "power" as DER is added to the system to maintain power quality and reliability to today's standards. As DER penetrations increase, that challenge becomes more complicated. In fact, the 32 element for islanding protection may prove to be less useful as DER penetrations increase. However, it is still used by many utilities, and in many places it is still an effective method for detecting islands. Therefore, it will continue to be used for some time.

Often, incorrect wiring is the root cause of islanding-detection failure during a utility witness test. By applying the principles in this paper, one can apply effective testing and commissioning tools to increase the likelihood of getting everything correct the first time, while at the same time, expanding one's knowledge of the relay's operation in regard to directional power.

Biography

R. Benjamin Kazimier is a Principal Application Engineer with Basler Electric Company. He holds a Bachelor's Degree in Electrical Engineering Technology from Purdue University. His work experience includes design, installation, testing, and commissioning of protective relaying equipment and a diverse range of power system apparatus. He is a member of the Georgia Tech Protective Relay Conference planning committee, the IEEE, the IEEE 1547 working group, the IEEE SCC21 working group, regularly attends IEEE-PSRC functions, and is the chairperson of the PSRC K10 working group.

References

[1] Electric Power Monthly. U.S. Department of Energy. Retrieved April 4, 2017, from http://www.eia.gov/electricity/monthly/pdf/epm.pdf

[2] EIA electricity data now include estimated small-scale solar PV capacity and generation. U.S. Department of Energy. Retrieved April 4, 2017, from http://www.eia.gov/todayinenergy/detail.php?id=23972

[3] IEEE Standard 1547-2003. *IEEE Standard for Interconnecting Distributed Resources with Electric Power Systems.*

[4] Johnson, G. *Protection Considerations for Installation of DER.* Basler Electric

[5] An IEEE Industrial Application Society Working Group Report. *Application of Islanding Protection for Industrial and Commercial Generators*.

[6] IEEE Xplore® Digital Library. http://ieeexplore.ieee.org/Xplore/home.jsp

[7] IEEE Standard 1459-2010. *IEEE Standard Definitions for the Measurement of Electric Power Quantities Under Sinusoidal, Nonsinusoidal, Balanced, or Unbalanced Conditions.*

[8] IEEE Standard C57.13-2016. *IEEE Standard Requirements for Instrument Transformers*

[9] Blackburn, J. and Domin, T. *Protective Relaying: Principles and Applications, Third Edition (Power Engineering)*

[10] IEEE Standard C37.110. *IEEE Guide for the Application of Current Transformers Used for Protective Relaying Purposes*

[11] A report to the Relaying Practices Subcommittee I, Power System Relaying Committee, IEEE Power Engineering Society. *Schematic Representation of Power System Relaying*

[12] UL Standard 1741, Edition 2. *Inverters, Converters, Controllers and Interconnection System Equipment for Use with Distributed Energy Resources*

[13] Basler Electric. BE1-32R Instruction Manual

[14] Dalke, G. *"Myths" of Protecting the Distributed Resource to Electric Power System Interconnection.* Basler Electric