Deploying Digital Substations:
Experience with a Digital Substation Pilot in North America

Harsh Vardhan, R Ramlachan
GE Grid Solutions, USA

Wojciech Szela, Edward Gdowik
PECO, USA

SUMMARY

Though IEC 61850 GOOSE has been in use for a while for various applications such as controls, interlocking, blocking etc. with substations across the world running successfully in a multi-vendor environment but IEC 61850-9-2 Sampled values and switched Ethernet process bus have yet to gain popularity. The use of NCITs (Non-Conventional Instrument transformers) have been limited to some niche application so far, such as measuring GICs, Open Phase detection, measuring very low magnitude AC, measuring DC etc. Introduction of IEC 61850 process bus and availability of NCITs have led to the way to real word deployment of Digital Substations. There have been several papers published and studies done on the design benefits and various tangible and non-tangible savings attained in digital substations as compared to Conventional Substations. This has interested utilities across the world to start deploying digital substations as pilot projects to realize the real-time benefits, understand the difficulties or ease to deploy such systems and have practical experience while comparing digital substation to a conventional system.

This paper discusses PECOs perspective in deploying one of the first digital substation pilot projects in North America. The pilot project is installed on a 230kV line connected to the ring bus managed by PECO, Philadelphia. The main aim of the project is to evaluate and learn the state of the art digital substation technology and compare the various aspects to a conventional substation. The project involves primary optical sensors, merging Units, Protection IEDs supporting 9-2LE, IEEE 1588 Clocks, Substation Servers and Substation hardened Ethernet switches.

KEYWORDS

Digital Substation, Process Bus, IEC 61850, Protection schemes, Optical Current Transformer.

1.0 Introduction

The term Digital Substation refers to a substation that employs both IEC 61850 Process Bus [1] and Station Bus [2] in its protection & control architecture. In a digital substation, the primary signals such as current and voltage measurements, switchgear position status and control etc. are digitized in the field at the process source and are sent to the protection & control devices using fiber optic cables as per IEC 61850 9-2 and IEC61850 8-1. The communication between the station level devices is achieved using IEC 61850 GOOSE and MMS services.

The digital substation pilot project described in this paper is installed at one of the substations managed by PECO. The purpose of this project is to implement the digital substation technology in the substation as a "proof of concept" and learn and understand the concept & different components of a digital substation.

Basic details of the project are given below:

Name of the substation: POST Substation

Location: Philadelphia, PA

Total Number of Bays: 12

Digital Substation Pilot Bays: 2

Commissioning Date: May, 2017

The paper discusses the digital solution installed on one of the two 230kV Lines. This 230kV line consists of two circuit breakers, CB 895 and CB 695. The line details are given below:

Name of the circuit: 220-39 Line

Length of line: 2.3 Miles

The digital solution applied to these bays run in parallel to the conventional systems and does not send any trip commands to the circuit breaker or control any switchgear in the field. Instead, the trip commands from the 9-2LE process bus relays are sent to the auxiliary relays mounted in the relay panel for monitoring and performance evaluation purposes.

2.0 Selection of Equipment

The first step of the project was to select the necessary equipment for the project and design an architecture.

2.1 Primary Sensor – Optical Current Transformers:

NCITs (Non-Conventional Instrument Transformers) are one of the key components in Digital Substations.

There are various options available to measure the AC currents and voltages. Conventional current and voltage transformers with copper wires have been in use for a long time. Non-Conventional Instrument transformers such as Optical current transformers (OCT), Rogowski Coil CTs, Power electronic based VTs, have also started gaining popularity. In this project, we are using Optical Current Transformers for the measurement of primary currents. Existing conventional VTs have been used for measurement of primary voltages.

Optical current transformers used here work on the principle of Faraday's effect – the current flowing through a conductor induces a magnetic field that affects the propagation of light travelling through an optical fiber encircling the conductor. The OCT are placed around the primary current carrying conductor and an output signal corresponding to the primary current is produced as per IEC 61850 9-2LE. Optical CTs are advantageous over conventional CTs for several reasons including a better frequency response and range, wide linear range, lighter weight etc.

Optical current transformers come in different shapes and sizes to meet different installation & performance criteria. The OCT used in this project is of Flexible Type (COSI-F3) which was wrapped around the high voltage bushing of the dead tank circuit breaker as shown in fig 1.

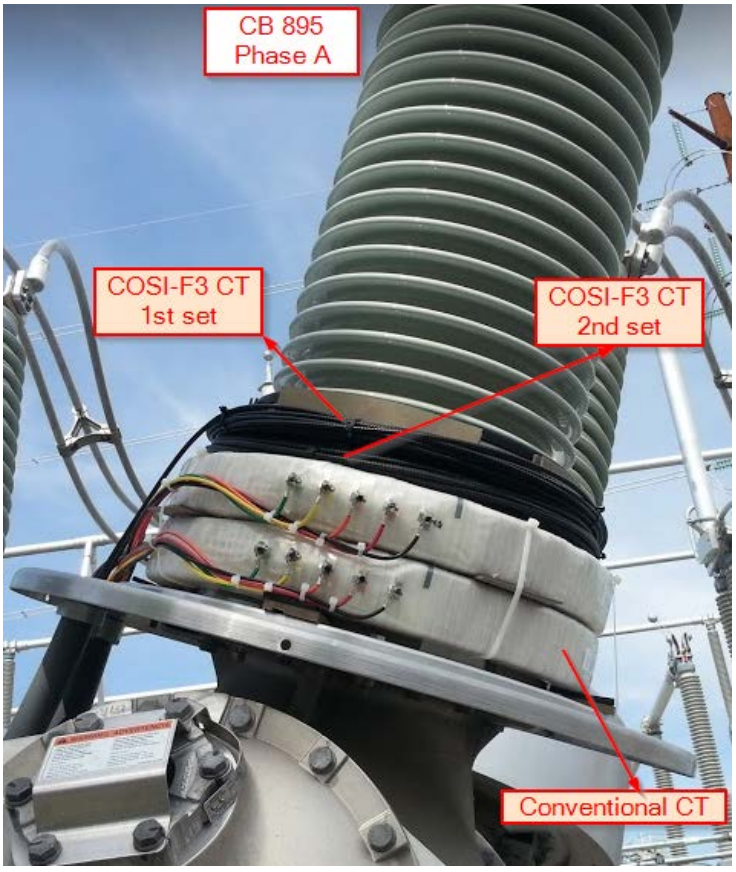

Fig 1 – Optical CT installed on the Breaker Bushing

The above picture shows 2 sets of COSI-F3 CTs wrapped around phase A of CB 895. On the bottom of the COSI CTs, there are two conventional CTs which are being used by the existing conventional relays and meters. Similarly, there are COSI-F3 CTs on the other phases, B & C, of the circuit breaker.

The system is designed to have primary and backup protection systems; therefore, both the circuit breakers, CB895 and CB695 have six OCTs (2 OCTs per phase) – one set of 3-phase OCTs feeding the primary system and other set of 3-phase OCTs feeding the backup system.

Fig 2 – Optical Current transformers installation on CB 695 and CB 895

2.2 Primary Interface Devices: Merging Units and Switchgear Control units

Primary Interface Devices are one of the main components of IEC 61850 Process bus. This project uses two types of Primary Interface Devices – Merging Units and Switchgear Control Units (SCUs). Merging Units are used to merge the output signal from COSI-F3 Optical current transformers and conventional VTs to produce the 9-2LE Sampled value streams. These 9-2LE Sampled value streams with 80 samples/cycle are available on the Ethernet network ready to be subscribed by different protection & control devices.

Switchgear Control Units are used to interface with the Circuit Breakers. The Circuit breaker status inputs (52a and 52b contacts) are hard wired to the SCU. SCU then communicates these signals to the protection and control devices on the station bus. SCU is a process bus equipment and ideally, it is mounted in the switchyard. However, in this pilot, the SCUs are mounted in the relay panels in the control room to avoid extra work needed to be done to install these in the field.
As stated before, this pilot project does not involve controlling (opening/closing) the circuit breakers or sending protection trips to the CB in the switchyard. Hence, the protection trips/ close commands from the MU320 are wired to the auxiliary relays (LJ Relay) in the panel for monitoring purpose.

2.3 Protection Relays

A Line distance protection relay supporting IEC61850 9-2LE is selected. The relay can subscribe to multiple streams of 9-2LE sampled values. Each primary and backup system has one such relay.
The primary protection relay subscribes to the sampled values coming from the primary Merging units, MU-CB895 and MU-CB695 through the Ethernet Network in the primary panel. Similarly, the backup protection relay subscribes to the sampled values coming from the backup Merging units, MU-CB895 and MU-CB695 through the Ethernet Network in the secondary panel
Once the relay has the successfully subscribed to the sampled values from both the Merging units, it is ready to perform the protection functions. If for some reason, the sampled values are not available or if the quality of the sampled values is not good, the relay generates a 9-2LE SV alarm and blocks all protection functions associated to those sampled values and hence avoid any maloperation due to loss of sampled values.
The relay communicates to the SCU using GOOSE for receiving the CB status and sending trip commands to auxiliary relays.

2.4 GPS Clock and Ethernet Switches

Time synchronization is critical in Digital Substation architecture, especially when the samples values which are to be processed by a given IED are published by different merging units. In terms of this project, it is important that both the Merging Units for CB895 and CB695 in each system are time synchronized so that 9-2LE samples are taken at the same time intervals. Time Synchronization is also important for the correct time tagging of the events. For this, a GPS based time server is selected. Each primary and backup system has its own clock. All the devices in each system are time synchronized to its respective time clock. In the event of failure to receive the time synchronized samples, the protection relay would raise an alarm and block the protection. Other devices such as merging units and SCU also have the means to generate an alarm when the time sync is lost. The below table shows the time synchronization method used for various devices:

Equipment	Time synchronization Method
Protection Relay	PTP (Precision Time Protocol) [3]
SCU	PTP (Precision Time Protocol)
Merging Units	PPS (Pulse Per Second) over Fiber
Substation Server	SNTP (Simple Network Time Protocol)
HMI PC	SNTP (Simple Network Time Protocol)

Table 1 – Time Synchronization in the substation

Ethernet switches are required to make the necessary Ethernet network for process bus and station bus. Ethernet switches selected in the project also supports the functionality of PTP Transparent clocks for the time distribution using PTP.

2.5 Substation Server and HMI

A substation server (with HMI) supporting IEC61850 Client functionality is also provided for local monitoring & engineering of the system. All the Equipment (Protection relays, Merging units, GPS clock etc.) could be accessed via the HMI PC.

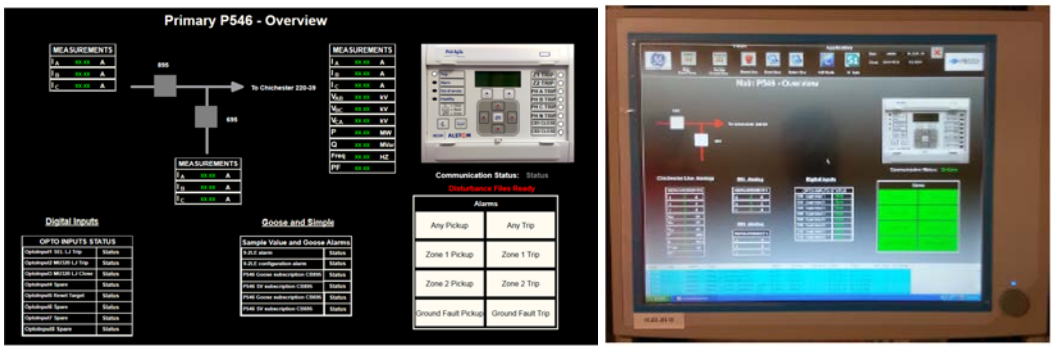

Fig 3 – HMI PC

3.0 Designing the Architecture

Selection of the right architecture is very important in designing digital substations. The nature of the network based devices offers several possible architectures such as point to point, ring, star, mesh topology etc. Various interconnections are possible in a digital network, e.g. One GPS clock might be used to synchronize all the equipment in the substation while the 2nd GPS clock might be a backup; or there might be different sub-networks and each sub-network might have its own GPS clock; each relay might have its own merging unit or the same merging unit might be feeding two different relays or each relay might have the functionality to choose between a given set of merging units as a failover mechanism etc.

Reliability & Availability, performance, economics & manageability are four important factors while designing the system architecture. Care must be taken to achieve a balance among all four factors. e.g. The reliability & Availability of the system shall not be achieved at the cost of its manageability.

In this project, an architecture with two completely independent system was selected as primary and backup system. The backup system is an exact replica of the primary system as shown below, except for the substation HMI – which is a common for both the systems and is only used for local monitoring & engineering.

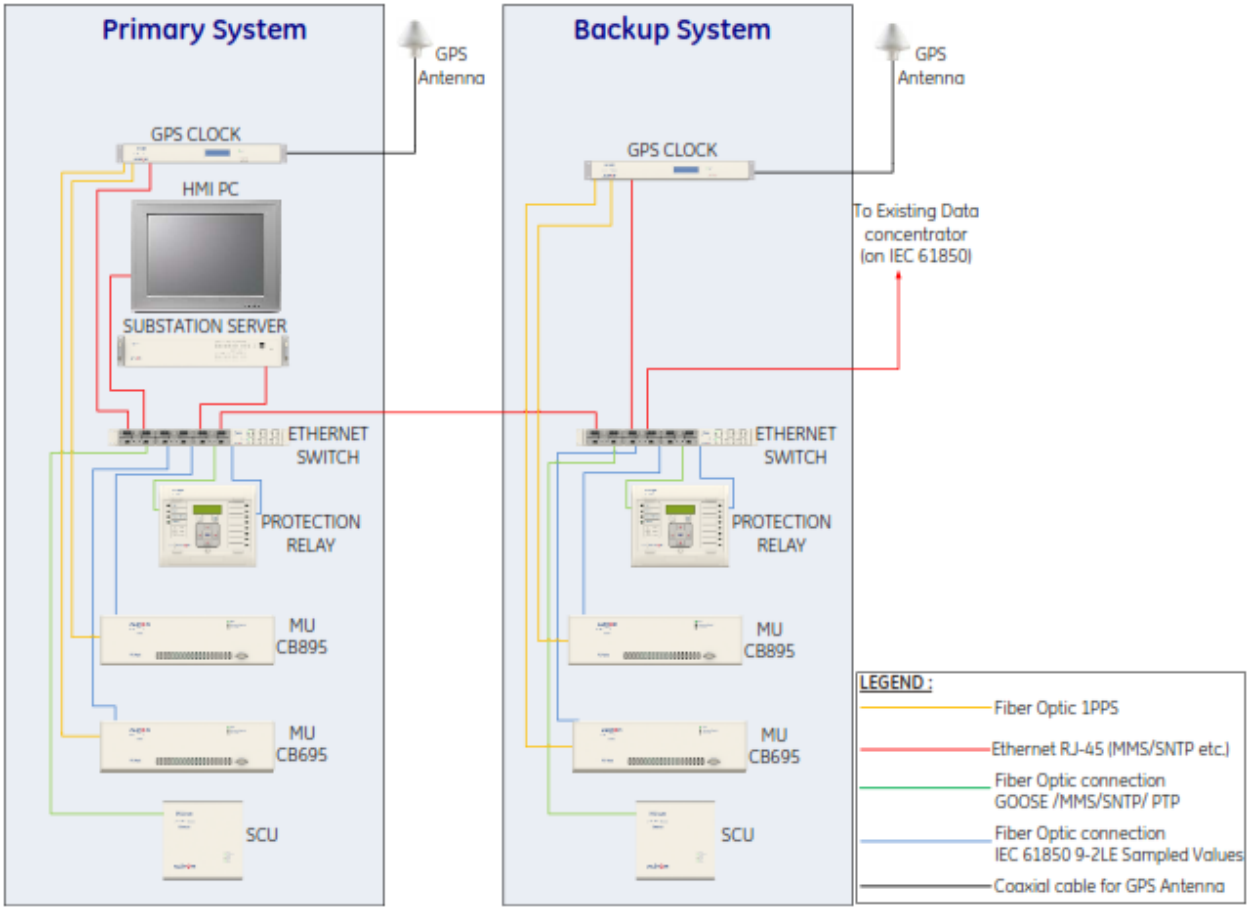

Fig 4 – Digital Substation Architecture

3.1 Segregating Process Bus and Station Bus

Process bus and Station bus carry different types of traffic and have different performance requirements. A physical separation between the two buses might not always be feasible due to various factors, but care shall be taken while configuring the system such that there is a logical separation between the two buses and different types of traffic. E.g. the sampled values coming for a merging unit shall not flood all the ports of an Ethernet switch and shall only go to the port where the respective subscribing relay is connected. Similarly, GOOSE signals for the trip command from the protection relay shall only be forwarded to the port where the subscribing SCU is connected.

The segregation of traffic is an important step in maintaining the required performance and not to overload the network devices. This can be done either by defining Multicast domains or by using V-LANs. In this project, the segregation between process bus and station bus traffic is achieved by using “static multicast filtering” where the multicast filters of the ports of the Ethernet switches are defined explicitly at the time of engineering.

4.0 Testing, Commissioning & Installation:

4.1 Primary Equipment - Optical CTs

Each Circuit Breaker has two sets of COSI-F3 CTs on each phase (A, B & C). First set of CT is for the primary system and second set of CT is for the backup system. COSI-F3 is a flexible type of CT which can be wrapped around the primary conductor. Because of the flexible nature of the selected CTs, it was not required to disconnect the primary bushings. The bushing covers were opened and the CTs were wrapped around the bushings as shown in Fig.1

Each breaker has one Cable Management box (CMB). All the cables from the primary & backup COSI-F3 CTs are terminated in the CMB. The merging units are mounted in the panels placed in the control room. Standard fiber optic cables are used for connections between the MU and Optical CT.
CTs are pre-calibrated at the factory for a stated accuracy for a given range of primary current and generally the only testing necessary at site is to make sure that the fiber cables are patched properly. However, a primary injection test is always recommended. After the CTs are installed at site, a primary injection test is done to verify the output accuracy in the 9-2LE sampled value streams.
One of the benefits of using NCITs is that the user doesn't have to worry about the CT ratios and CT polarities. Once the primary injection testing is done, the CT polarity and ratio is configured using the MU software and can be changed as per the requirement.

4.2 Secondary IEDs

All the secondary equipment is mounted in the panels as per the architecture shown in Fig. 4
One of the benefits of digital substations is that since most of the system is based on digital communication and only a minimal of the wiring needs to be terminated at site, the overall installation, testing & commissioning time is much lesser than the time taken for a conventional system. The system is thoroughly tested at the factory before it is shipped to the site. This basically shifts the focus from Site Acceptance Test (SAT) to Factory Acceptance Test (FAT). Once the Optical CTs are commissioned and sampled values are available on the Ethernet network, the relays have just to defined the Sample Value Id of the MU to subscribe to those SV streams. The configuration tool and method for process bus relays remain the same as it is for conventional relays. So, for the end user, it is like configuring a conventional relay with some additional settings for sample value Id SvId, time sync etc.
A secondary injection kit supporting IEC 61850 9-2LE was used to test the protection relays. Again, using the secondary injection kit with 9-2LE output was the same as using a standard injection kit. The 9-2LE Ethernet port of the secondary injection kit was connected to the Ethernet switch of each panel and it was possible to test the both primary and backup relays at the same time using the single injection kit.

The only field wiring required in this project was the CB status which was wired to the SCU. All the secondary equipment were mounted in the panel except the GPS Antenna.
The antennas for Primary and Backup GPS receivers are mounted at two different locations to ensure higher availability of the time signals.

The below picture shows the logical wiring diagram:

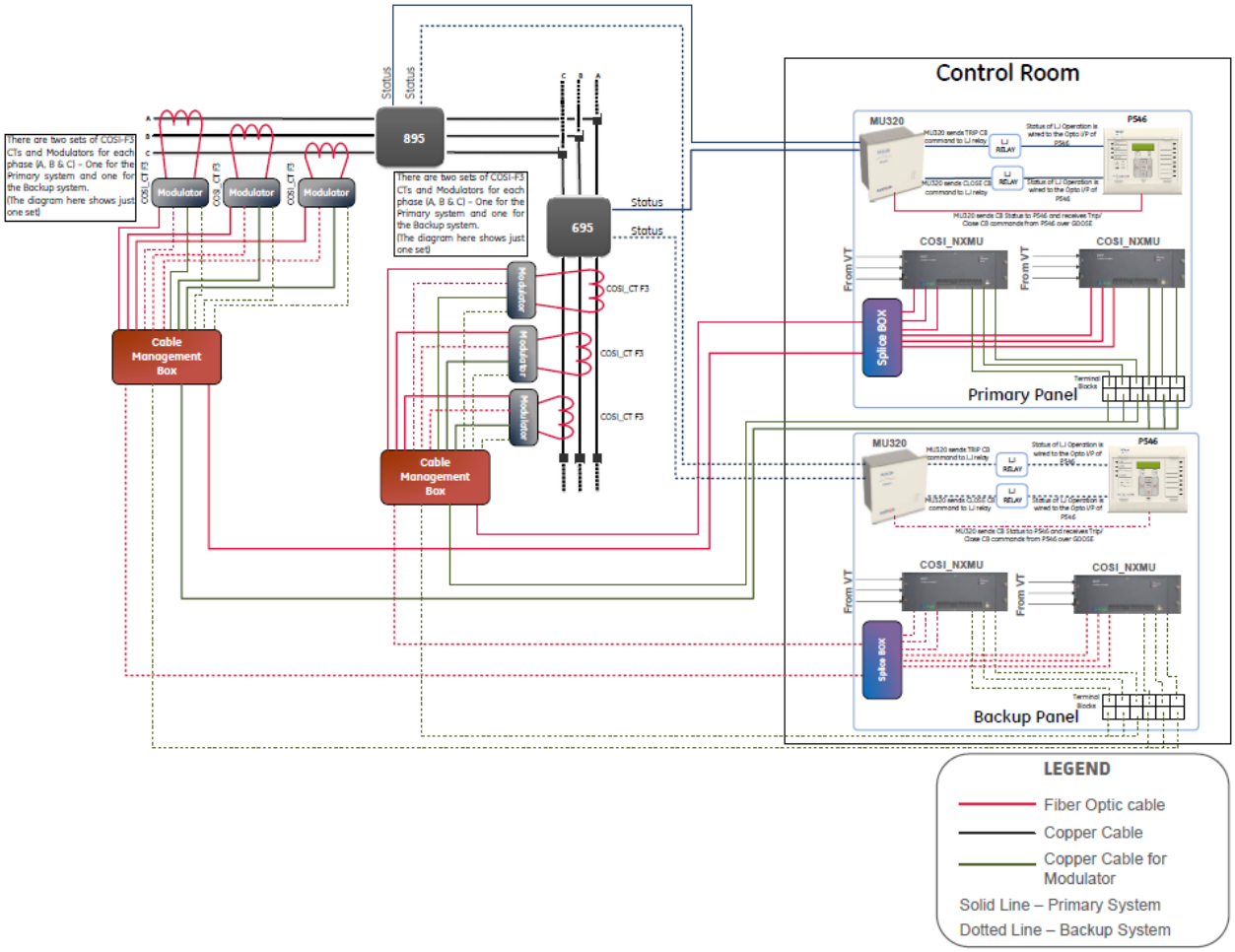

Fig 5 – Logical Wiring Diagram

5.0 Self-Diagnostic & Monitoring System

All the devices in the system have self-diagnostic capabilities so the end user does not have to spend much time troubleshooting the system. E.g. If the protection relay fail to subscribe to any of the two merging units or if the samples coming from any of the merging units are not time synchronized, the relay will generate an alarm for this. Another example, If the SCU fails to subscribe the GOOSE signals from the protection relay, the SCU will generate an alarm for this and send it to the SCADA.

If there is any failure in receiving the digital signal from the optical CTs mounted in the field, the merging unit will generate an alarm for this. Moreover, the merging unit will also raise the corresponding quality flag for this in the sampled value frames so that the subscribing protection relay would know about this failure and would act accordingly.

6.0 Conclusion

Studies have shown that the implementation of digital substations not only reduces the capital cost of building substations but also reducing the cost of ownership (operation and maintenance costs) over the lifetime of the substation. This project is a first step beyond studies to understanding and realizing the practical benefits from the design process to implementation and maintenance. Implementing a digital system in parallel with a conventional protection and control system was necessary to evaluate and compare the performance between the systems. The goal being to ensure the performance is at

least equivalent from operational data gained. This project will be an invaluable vehicle and model to proving that digital substations can be a practical reality.

BIBLIOGRAPHY

[1] IEC 61850-9-2 Ed.2.0 2011 - Communication networks and systems for power utility automation – Part 9-2: Specific communication service mapping (SCSM) – Sampled values over ISO/IEC 8802-3

[2] IEC 61850-8-1 Ed.2.0 2011 - Communication networks and systems for power utility automation – Part 8-1: Specific communication service mapping (SCSM) – Mappings to MMS (ISO 9506-1 and ISO 9506-2) and to ISO/IEC 8802-3

[3] IEEE Std C37.238 - 2011 - IEEE Standard Profile for Use of IEEE 1588™ Precision Time Protocol in Power System Applications