Application of Undervoltage Protection to Critical Motors

Matt Proctor, Member, *IEEE*

Abstract— **Undervoltage protection is commonly used to protect motors from damage during abnormal conditions and to prevent breaker-fed motors from re-accelerating after a restoration of bus voltage. This protection method has the unfortunate consequence of introducing the possibility of a nuisance trip when VT's fail. This paper explores fundamentals of under voltage protection as well as pros and cons of different methods that can be deployed to prevent VT failure from causing costly outages. Case studies will be presented as well as methods which include both monitoring of hardwired VT status contacts and internal relay algorithms.**

***Index Terms*—Motor protection, Undervoltage application, VT Fuse Failure**

I. Introduction

Electric motors are designed to operate under specific rated conditions of current, speed, mechanical torque, temperature, frequency and voltage. An undervoltage condition, either transient or continuous, influences each of these rated conditions, which can have adverse effects including reduced performance, reduced useful life expectancy of the machine and/or complete mechanical failure. Furthermore, the entire distribution system can be impacted.

Undervoltage protection is recommended by the IEEE Std 242 Buff Book[1], but it must be applied with the proper balance of security and sensitivity. Any motor that is considered imperative to the industrial facility's process is referred to as a critical motor, one which should only be taken offline under dire circumstances. It is sometimes prudent to allow a critical motor to ride through an undervoltage disturbance and automatically reaccelerate. Still other scenarios may pose an imminent threat to the motor or the whole distribution system, and undervoltage protection must be applied. It is the aim of this paper to provide undervoltage protection application ideas to reduce the likelihood of needlessly tripping these critical motors.

II. Undervoltage Conditions

There are three types of undervoltage conditions to consider:

- Transient undervoltage
- Voltage sag
- Complete loss of source

A. Transient Undervoltage Conditions

A transient undervoltage condition is one that initially occurs due to a fault in the system but then quickly recovers when the fault is cleared. Consider the sample system in Figure 1.

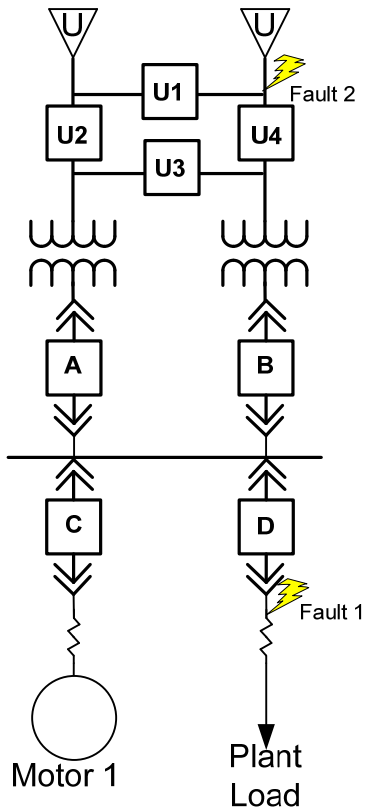

Figure 1: Sample Medium Voltage Distribution System

When a 3LG bolted fault occurs on the feeder to Motor 2 (shown as Fault 1), the bus voltage will drop to 0 V, assuming no impedance between the fault and the bus. Presumably, Breaker D has overcurrent protective relaying that will trip the breaker and clear the fault, likely in the order of 5 to 30 cycles. This creates a transient voltage dip at the terminals of Motor 1.

This dip recovers in a time that is based on several factors including inertia, the motor's torque vs speed characteristics as voltage decays, the load torque response, and motor regeneration based on decaying air gap flux. Figure 2 shows a sample voltage recovery.

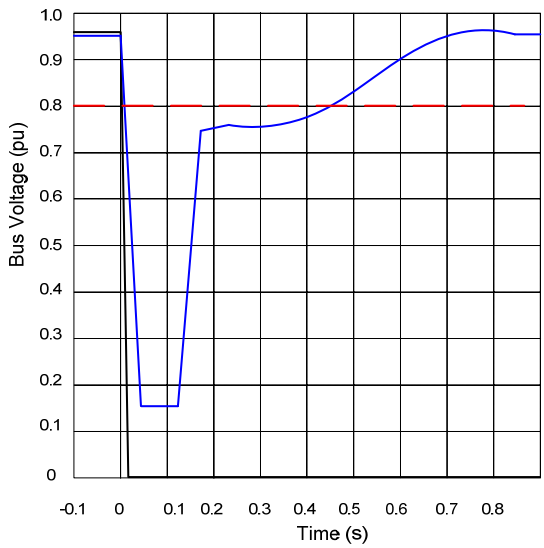

Figure 2: Sample Transient Voltage Recovery

B. *Voltage Sag*

A voltage sag is an undervoltage condition that occurs over a relatively long time. It is not rectified quickly. Consider Fault 2 in the sample system of Figure 1. When the fault is cleared quickly by utility ring bus protection, the utility power delivery capability is halved. If this cannot meet the load requirements, voltage will sag until enough load is disconnected.

Compounding the problems of the source deficiency is that induction motor torque is proportional to the square of the motor terminal voltage. This means that a drop in voltage results in a reduction in motor torque, a decrease in motor speed, an increase in slip and an increase in motor current. Notice the point in Figure 3 where the load torque exceeds an induction motor's torque applied at 70% voltage. At this point, the load will fail to accelerate, and the motor will stall. The motor will likely draw locked rotor current until the motor is tripped by mechanical jam protection or thermal overload. This increase in current further stresses an already depressed electrical source, and this cascade of events could cause more widespread loss of load.

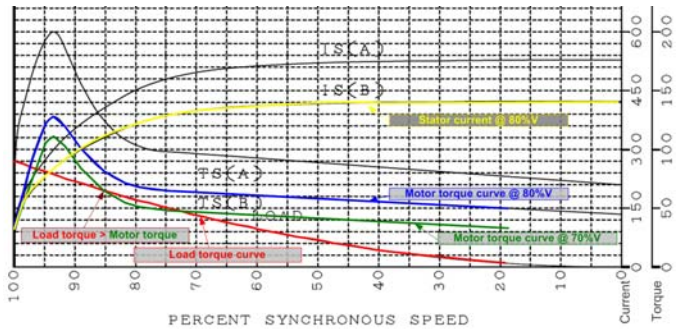

Figure 3: Sample Speed vs Torque/Current Curve

C. *Complete Loss of Source*

A complete loss of source is when a breaker or contactor is opened to decouple the motor from the source. If the source remains open, the motor, lacking an emf, will obviously continue to decelerate until it stops. Once the motor is removed from the source supply, the inertia of the machine will cause the rotor windings to cut the decaying air gap flux. The danger in this scenario is not the undervoltage itself but the possibility of restoring source voltage out-of-phase with the motor's residual voltage. If an automatic reclosing scheme or bus transfer scheme is used that does not account for this residual voltage, there is danger of excessive transient torques that could damage the load, the motor or the motor coupling. There is a great deal of literature that discusses this topic and how to safely implement a motor bus transfer, which is beyond the topic of this paper[2][3].

For the purposes of this paper, it should be noted that the IEEE Buff Book recommends a considering a combination of protection functions to guard against the complications from auto reclosing and/or bus transfer, all of which require voltage measurement:

- Undervoltage (27)
- Underfrequency (81)*
- Loss-of-Power (37)
- Reverse Power (32)

* Frequency can be measured by using the zero-crossing of the current sinusoid, but this is not a preferred method of frequency measurement because harmonic noise can more easily distort the current waveform than it can the voltage.

III. MOTOR CONTROL TYPES

A. *Electrically (Magnetically) Held Contactor*

An electrically held contactor is held closed by the same electrical supply that energizes the motor's stator windings. It has an inherent undervoltage protection because the motor contactor will open once the motor's electrical supply dips below a certain threshold, typically 60-70% of the nominal voltage. See Figure 4.

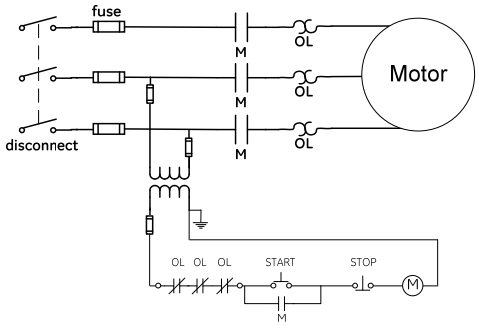

Figure 4: Sample Electrically (or Magnetically) Held Contactor

This inherent undervoltage protection is usually sufficient for small, non-critical motors, which are sized with ample pull-up torque. Generally, the motor reacceleration stall consequences from an undervoltage condition as detailed earlier are not of great concern to smaller motors. Transient torques can be considered small enough that they are no threat to motor shafts or load couplings. The starting current on any individual small motor is not a large percentage of the overall load on the system, so the cascading voltage dip due to reacceleration is not of great concern. But considered as an aggregate, many small motors all attempting to reaccelerate at the same time may create a cascading outage.

For larger motors, it may not be sufficient to rely on the electrically held contactor dropping out. Larger motors have a higher inertia and a propensity to produce a residual voltage after the contactor has opened. This residual voltage can keep a contactor energized and held closed long enough for the motor speed to decrease beyond its critical speed where load torque exceeds motor torque. An undervoltage protection function that is independent of control power may be warranted.

B. Electrically Held Contactor with UV Ride-Through

Just as contactors powered from control power transformers (CPT's) provide an inherent undervoltage protection, they also provide an inherent undervoltage ride-through because of the residual magnetic flux and mechanical inertia in the contactor coil itself. The physics of this inherent ride-through is the same concept, albeit on a much smaller scale, of an induction motor's stator winding residual air gap flux that combines with inertia to produce a residual voltage.

The time characteristics of the residual flux decay of a contactor vary by manufacturer and coil type and are dependent on several factors including point of wave when voltage was disconnected. Generally, a contactor will provide a ride-through between 20 and 100 ms[5].

To provide a more defined ride-through, an electrically held contactor can be applied with an energy storage device which prevents an undervoltage condition from immediately opening the contactor. See Figure 5.

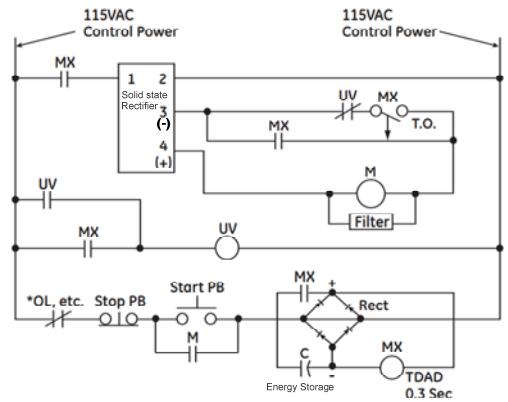

Figure 5: Sample Electrically Held Contactor Control Schematic with UV Ride-through[4]

One danger of using an electrically held contactor with a UV ride-through dropout timer is that the contactor could drop out during a severe voltage dip yet recover quickly before the ride-through time elapses. This creates a complete loss of source scenario, followed by an automatic reclose, which as described earlier, carries the risk of transient torques. If automatically reclosing the contactor is not feasible due to these consequences, a digital overload relay (or Intelligent Electronic Device – IED) can easily be programmed with a restart inhibit timer to prevent reclosure of the contactor.

Another method of controlling the undervoltage trip and ride-through characteristics of the motor circuit is to derive the motor control energy from an uninterruptable power supply (UPS) or DC battery system rather than a CPT. See Figure 6.

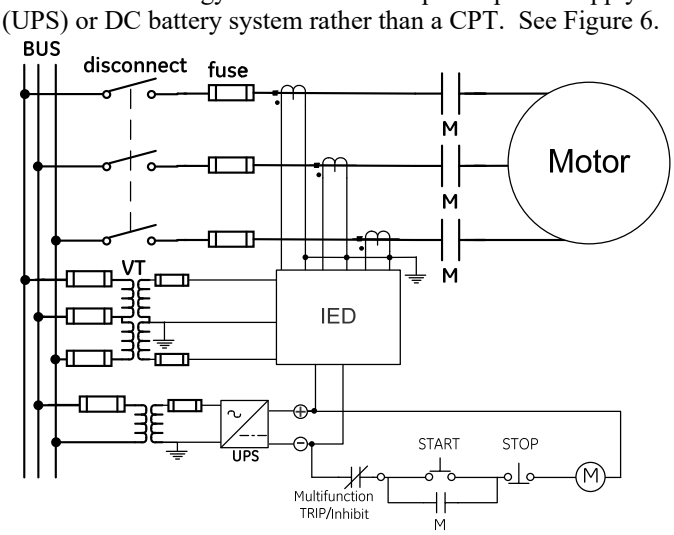

Figure 6: Sample Ups-Powered Motor Controls Circuit

An independently powered motor control system allows an IED to fully control the tripping, ride-through and start inhibit functions without much concern for the pickup and dropout of the contactor due to bus voltage fluctuations. The consequence of this system is the cost and maintenance requirements of the UPS or battery system. Also, the UPS introduces a point of failure that could needlessly trip the

motor offline. Of course, the natural value of a UPS is that it should be more reliable than a CPT. One advantage that a UPS has over the capacitive energy storage system shown in Figure 5 is that a UPS or battery storage system typically has self-monitoring diagnostics whereas a simple capacitor can fail to store energy without warning.

C. Mechanically Latched Contactor

For motors that are started and stopped frequently enough to warrant the use of a contactor, yet the application calls for the latching function of a circuit breaker, a latching contactor can be used. A mechanically latched contactor functions like a breaker in that it must be actuated to open. Otherwise, it will remain closed. For the purposes of this discussion on motor controls, a mechanically latched contactor can be considered a breaker.

D. Breaker Applications

It makes sense that most large, critical motors are not required to start and stop frequently, so breaker applications are not uncommon. See Figure 7.

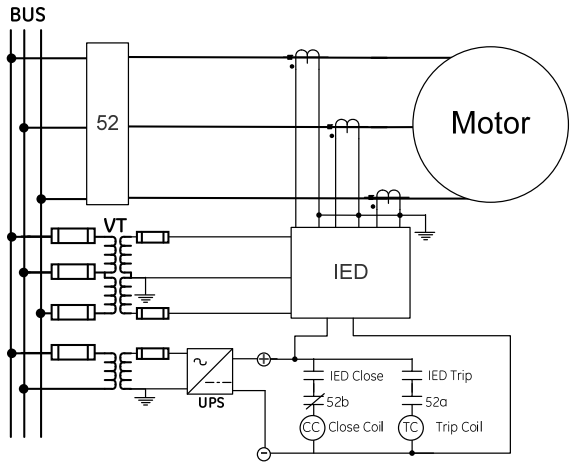

Figure 7: Sample Breaker Application

Because breakers rely on a separately derived energy source to open and close the breaker, an IED is typically used to control the tripping, ride-through and start inhibit functions. Unless a breaker is actively tripped for an undervoltage condition, manual intervention would be required to prevent the motor from re-accelerating once the source is restored.

E. Variable Frequency Drive (VFD) Applications

The requirements for undervoltage protection in VFD's vary depending on VFD specifications. See Figure 8. When a source voltage drops below the DC Link voltage, the drive's capacitor, whose primary function is to smooth AC ripple on the DC bus, begins to discharge. The DC bus voltage also drops. If the VFD uses ordinary Volts/Hz control method or an open loop vector, the drive will not adjust its output to accommodate the depressed DC link voltage. Once source voltage recovers, assuming the VFD's DC undervoltage protection has not disconnected the drive, the capacitor will begin to charge, and the motor will incur an increase in current. This charging current may damage the VFD, and the increased motor load could trigger mechanical jam or overload protection in addition to contributing to the cascading voltage dip problem[5].

If an IED is applied to perform undervoltage protection at the source of a drive, it must be applied in an IED separate from the one applied to the current-based motor protection. Separating these two functions allows an IED to properly track the varying current frequency at the output of the drive and adjust its digital sampling frequency accordingly while also measuring bus voltage, which remains at or near nominal frequency. If a single IED cannot adjust its sampling frequency for both drive output and bus voltage, separate IED's must be used.

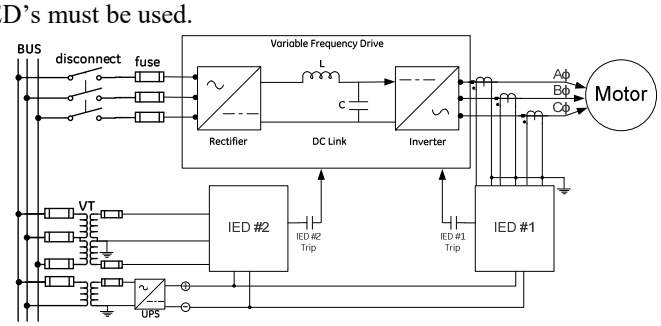

Figure 8: Sample Variable Frequency Drive Application

IV. Application of Secure Undervoltage Protection

For all the reasons previously outlined in this paper, hopefully it is evident that undervoltage protection is necessary in some motor control applications to prevent unwanted reacceleration of a load, to limit recovery inrush, and to avoid complications that arise from reconnecting a source to motor residual voltage. Because voltage-based protection is required, reliable voltage-based measurement is crucial. To prevent nuisance operations from VT failures, it is recommended to apply an IED in a way that can determine the difference between VT measurement errors from a true undervoltage condition.

To ensure that undervoltage protection operates for a voltage sag but does not operate for a blown VT fuse, a simple minimum voltage threshold can be applied. This threshold can be set below the minimum expected voltage sag. Presumably, any voltage measurement below this minimum threshold can be attributed to a VT failure.

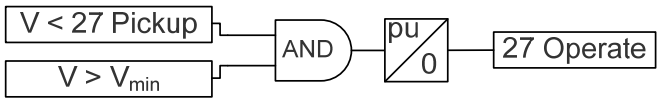

Figure 9: Undervoltage Logic Applied with Minimum Threshold

The consequence of adding security with this method is that this can prevent tripping on undervoltage when the source is completely removed or when a three-phase fault occurs close to the motor bus. Consider the example of a motor fed by a switchgear whose main incoming breaker is opened. It is preferable to trip the motor breaker on undervoltage. As the motor coasts down, the bus voltage will decay at some rate toward 0 V. If that voltage drops below the minimum voltage threshold prior to the undervoltage pickup timer elapsing, the time-undervoltage will fail to operate.

Another method of securing the undervoltage trip from occurring when a VT fails is to use a molded-case circuit breaker (MCCB) in lieu of fuses as the protective device on the secondary circuit. See

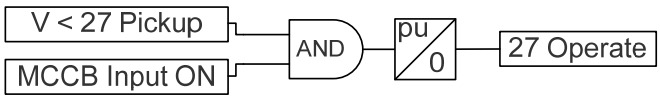

Figure **10**. This method is effective as long as the VT failure does not occur on the primary side of the VT, causing the fuses to blow but leaving the MCCB closed.

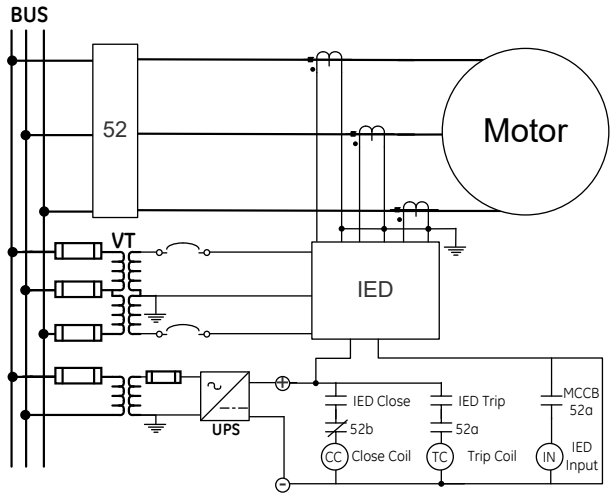

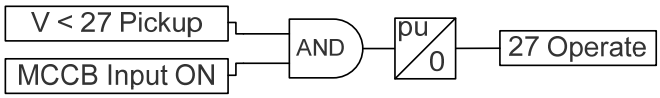

Figure 10: Undervoltage applied with MCCB Status Check

A third method of securing an undervoltage trip against a VT fuse failure is to apply advanced IED logic that is commercially available in IED's from multiple manufacturers[6][7]. While there are subtle nuances between manufacturers' logic, the basic premise is the same: for VT fuse failures, there should be no significant change in current magnitude or phase angle, whereas an actual disturbance will simultaneously affect both current and voltage measurement.

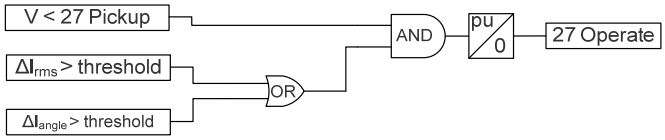

Figure 11: Simplified Concept of Undervoltage Applied with VT Failure Detection

The shortcoming of this concept is that certain applications have a consistently changing current magnitude. Consider the reciprocating compressor waveform in Figure 12. When the IED senses an undervoltage condition, it simultaneously checks current measurements and notices that current has significantly changed from that of only two cycles ago. The IED misinterprets the loss of VT signal as a true voltage disturbance, the breaker is allowed to trip, and the plant incurs the pain of a nuisance trip. Because of the constant loading and unloading nature of a reciprocating compressor, using current measurement alone to verify a VT failure is insufficient.

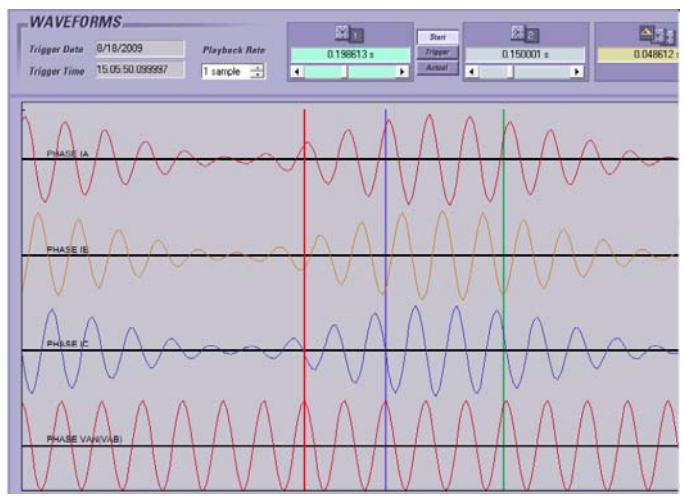

Figure 12: Sample Reciprocating Compressor Load

To address the complications of detecting VT failure on reciprocating load applications, another approach is to check for motor residual generation using a reverse power function. See Figure 13.

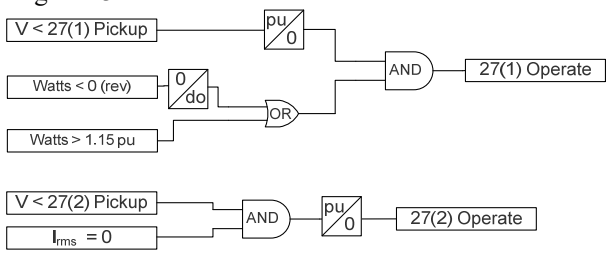

Figure 13: Undervoltage Supervised by Reverse Power or High Forward Power

This logic uses power measurement as a requirement for the undervoltage element to operate. The instant the motor begins to export power, the undervoltage element becomes armed. The IEEE Buff Book recommends the use of a loss of power instead of a reverse power relay to serve this function. It cites three objections:

1. Faults near the motor may have enough impedance between the motor bus and the fault to allow power to continue to flow into the motor, preventing any reverse power.
2. In absence of a load to absorb the power, reverse power may not flow.
3. Some reverse power relays may yield an operation based on vars instead of watts.

The third objection is simply not a concern with modern IED's, but the others are valid objections. Therefore, the logic of Figure 13 includes a pathway for the undervoltage to trip after timing out when either power is being sent back into the system or if the motor consumes a large amount of power, indicating that the external disturbance has cleared and the motor is attempting to reaccelerate. A loss of power relay cannot be used if the aim is to improve security against VT failures because a VT failure will make measured power equal 0.

The second objection where a motor is still weakly fed during a fault is addressed by including logic that allows the undervoltage element to trip when power surges above the level of a normal overload. This indicates that the external fault has cleared and the motor is attempting to reaccelerate. If voltage does not return to a healthy level before the undervoltage timer elapses, the motor will trip. The undervoltage timer is allowed to time regardless of the watt level.

The first objection in which a motor does not have a load to deliver it power is addressed by a second undervoltage element altogether. It is time-delayed longer than the first but can trip when current is equal to 0. This function meets the Buff Book's loss of power recommendation and serves as a backup to ensure that the motor is disconnected from a dead bus in the event that the motor neither back-fed the system nor attempted to re-accelerate.

The use of power elements used in the first undervoltage element verifies that the undervoltage condition is not a false indication due to VT failure. Likewise, the use of an undercurrent element in the second undervoltage element ensures that there is no motor load to be lost if the undervoltage element does trip. This combination of logic provides an improvement is security of the undervoltage element without sacrificing its efficacy.

References

[1] IEEE Recommended Practice for Industrial and Commercial Power Systems Analysis, IEEE Standard 399-1997, September 1997.

[2] ANSI/NEMA Std C50.41–2012, Polyphase Induction Motors for Power Generating Stations.

[3] IEEE Guide for AC Motor Protection, IEEE Standard C37.96-2012, February 2013.

[4] Limitamp Medium Voltage Motor Control, *GE Consumer & Industrial*, Plainville, CT, 2007, pp. *G21*.

[5] CIGRE/CIRED/UIE Joint Working Group C4.110, "Voltage Dip Immunity of Equipment and Installations," April 2010.

[6] 869 Motor Protection System Instruction Manual, *v. 2.2*, GE Grid Solutions, 2018, pp. 8-50.

[7] SEL-710 Motor Protection Relay Instruction Manual, Scheweitzer Engineering Laboratories, Inc., 2015, pp. 4.45.

Matt Proctor is currently a Senior Technical Sales Staff Manager for GE Grid Automation. He joined GE in 2010 as a protection & control engineer, specializing in power system studies and protective relay applications. Matt has applied protective relays in applications ranging from 500kV utility substations to 480V industrial distribution and from electromechanical relays to modern digital relays using IEC61850. Matt earned Bachelor of Science in electrical engineering from Louisiana State University in Baton Rouge, LA in 2001 and an MBA from LSU in 2005. He has been working in the electrical power field in various capacities since 1997 and is a registered professional engineer in the state of Louisiana. He can be reached at Matt.Proctor@ge.com.