Transmission Interconnection: Lessons learned from a recent event at an acquired Generating Plant.

Michael Jensen and Lokoko Kitenza
Electric Transmission System Protection
Pacific Gas and Electric Co. (PG&E)

Previously presented at WPRC, Spokane in Washington in 2016

***Abstract*— Transmission and Distribution (T&D) Companies tie to several generation plants and other utilities to make an electric transmission grid. Each of the interconnection facilities is governed by the Guidelines that ensure smooth operation of the Power System. However, the Interconnection guidelines are generally limited to equipment at the Point of Interconnection (POI), therefore a thorough investigation of protection schemes may not be carried out by the interconnecting Transmission Operator. North American Electric Reliability Corporation (NERC) PRC-001 requires review of the settings among interconnecting entities to ensure protection coordination. However, it does not cover a thorough review of settings that include oscillography requirements and other protective settings that may be critical to the operation of the interconnection but do not affect the protection coordination. Design standards and protection philosophies vary among generation and transmission operators. This variation in design standards makes it difficult for protection engineers to perform root cause analysis in an emergency event. In addition, testing procedures may be different from one facility to another and smaller interconnection parties may not have experienced staff to conduct maintenance testing or proper startup commissioning. A recent event at one of the combined cycle power plants recently acquired by PG&E is an example that points out some of the inadequacies of the existing interconnection guidelines. Lessons learned by PG&E have resulted in closer co-operation between the Transmission Operator and Generation Operator and is making us re-think about the way we interconnect to other customers.**

The policies and guidelines that govern third party interconnections are going to play even more important role in the future as the number of Interconnections are likely to increase due to the competitive bidding policy being pursued for new substations by the California Independent System Operator (CAISO) under FERC Rule 1000. As a result of CAISO's policy to bring competition to California electric transmission projects, there will be electric substations designed, owned and operated by a third party that would be surrounded by local utility grid. We as protection engineers need to re-think about how we review/analyze the third party protection schemes. The failure to do so can affect the whole electric grid. Protection Engineers should be more pro-active so that protection schemes and relay settings ensure the reliability of the Power System. Protective relays are the silent sentinels of the electric system, rules and policies need to be in place to allow the protection schemes to safeguard the power system.

Keywords—Interconnection; Cogeneration; Engineer Procure Construct;Turn Key; Reliability; Transmission Protection; Combined Cycle power plant; Steam Generator; Restricted earth; Sensitive ground; Ground differential; FERC Rule 1000; REF.

I. INTRODUCTION

The PRC standards outline the key activities needed to achieve "basic utility reliability". They do so by protecting the transmission system assets against routine events that could destroy elements of the power system. Some power systems elements (miles of conductor, large power transformers, Generators) have very long lead time in terms of replacements. Disruption of power flow through the operation of protection systems is key to retaining the resilience of the system. At the same time, as the 2003 Blackout Analysis revealed, lack of coordination and standardization of the design of protection systems can result in extensive cascading, making minor situations worse. Protection system performance issues, easily, can become a major risk for both system reliability and/or compliance with mandatory standards [7].

This paper is about an event operation experienced at an acquired "Turn-Key" power plant that subsequently led to a complete rewind of a generator and the plant shutdown for about three months because of the damage that incurred less than four year from the first commercial operation. The paper gives an overview of the event, the analysis finding, the problems mitigation's solutions and the lessons learned.

II. BACKGROUND

A. Natural Gas, Combined Cycle power Plant

The Generating Station in question here consists of a natural gas fired combined cycle power plant and associated linear facilities. The plant has the nominal Capacity of 660 MW. It consists of 2 Combustion Turbine Generators (CTG) fueled by natural gas and one Steam Turbine Generator (STG) with a multi-cell air cooled condenser. Combined cycle power plants produce electricity by mixing purified compressed air with natural gas and by recycling the steam produced from the combustion turbine to effectively produce more electricity. Within the gas turbine, the mixed natural gas-air is heated at a very high temperature. Then, the high velocity hot mixture spins the generators' blades to produce electricity. Moreover, the steam produced from the gas turbine is harvested through the Heat Recovery Steam Generator (HRSG) system. The

recovered high pressure steam is in turn used to spin another generator (the Steam Turbine Generator), and produce even more electricity.

In a combined cycle power plant, the combination of the gas and the steam turbines produce up to 50% more electricity than the traditional one cycle combustion generator. One of the other great advantages of combined cycle power plants is that they are designed to allow a rapid start and shutdown in comparison to other types of rotating systems. This feature makes these types of plants very attractive in this era of renewable energy, because they are capable of accepting quick load variations and as such help to maintain the Bulk Electric System (BES) more stable.

At Generation Station, each of the two CTG is a 3 phase, 231.5 MVA at 0.85 PF, 18kV, with 3,600 rpm nominal speed. The STG is 411 MVA at 0.85 PF at the same voltage and nominal speed as the CTG.

A "Turn Key" project, the plant first came online in 2010 after about 3 years of planning, construction and commissioning.

B. *Green field "Turn Key" proejct: Engineer, Procure and Construct (EPC)*

Under a Renewable Power Purchase and Sale Agreement (PSA), The Utility Company acquired a generation station that was engineered, procured and constructed by a third party organization as a "Turn Key" power plant. This means that the System Protection department was involved in the design process but the project was considered a third party interconnection power plant. This is an important fact to take in account as we present the root cause of the event of March 14, 2014, just four years after the first commercial operation of the plant.

In 2007 the interconnection process for a third party generator interconnection guideline was limited to our in-house guidelines based on the PRC-001 requirements. It is important to note that the oscillography and other similar monitoring devices installed on the generator side were not enforced by NERC. In fact, prior to June 18, 2007 (the date when NERC standards become mandatory and enforceable in the USA) NERC standards were good industry practice, they were not enforceable and they were not mandatory.

III. EVENT ANALYSIS, FINDING AND MITIGATION

The CTG1's Generator transformer's sustained a C phase bushing flash over. As a consequence, the Generation Station 230/18kV CTG1 Generator Step Up's (GSU) 230kV breaker correctly tripped on transformer differential operation, and the 230/18kV STG GSU's 230kV breaker incorrectly tripped on Restricted Earth Fault (REF), also known as the ground differential, causing the loss of one of the CTGs and the Steam generator.

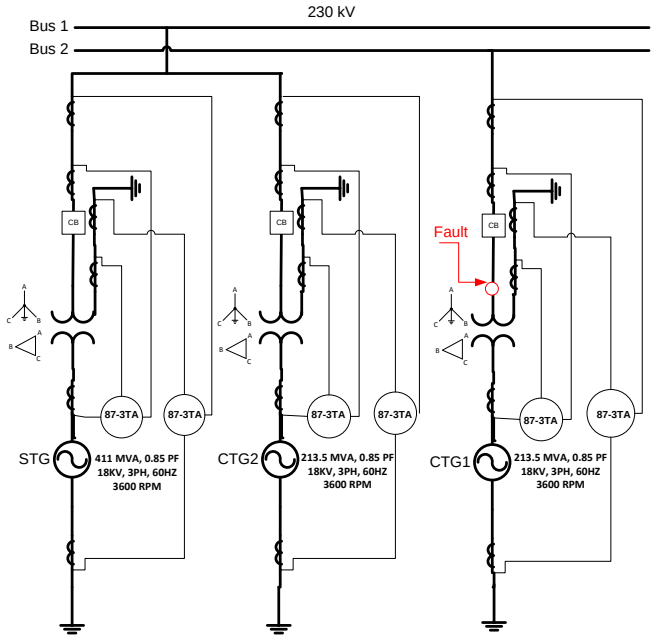

Fig.1 Generation Station Configuration

The transformer differential event was a legitimate operation caused by the bank high side single phase bushing flashover. The failed bushing was in the transformer differential protection zone. However, the STG2's REF element operation was a misoperation. The sensitive ground element operation was not expected given that the fault was out of section for STG2's sensitive ground relay. The ground differential scheme is not a standard protection for transformer protection at PG&E and it is one of the elements that are not required by NERC PRC-001 for third party interconnection projects. Since the REF operation was a misoperation in this case, we had to investigate further to determine why it operated incorrectly.

	CTG1		STG	
	87-1TA	87-1TB (T60)	87-1TA	87-1TB (T60)
PH DIFF OP	Yes - (Correct)	Yes - (Correct)	No - (correct)	No - (Correct)
REF OP	No - (Incorrect)	Yes - (Correct)	Yes - (Incorrect)	Yes - (Incorrect)
FAULT LOCATION	In Zone	In Zone	Out of Zone	External
PH CT WIRING	Wrong (Floating)	Wrong (Floating)	Wrong (Floating)	Wrong (Floating)
NEUT CT WIRING	Wrong (Rolled)	Correct	Wrong (Rolled)	Wrong (Rolled)

Table 1. Summary of GSU event analysis and field finding

A. *Steam Turbine Generator GSU's REF misoperation*

1. *Wiring issues*

As shown in in Fig. 2, the expected current flow of the zero sequence for an external fault should be opposite to the neutral current recorded by the relay. However, the raw event record downloaded from the relay showed that the ground differential

picked up and initiated the breaker tripping for this external fault. After reviewing the event records, and double checking the settings, we suspected the CT wiring may have been rolled.

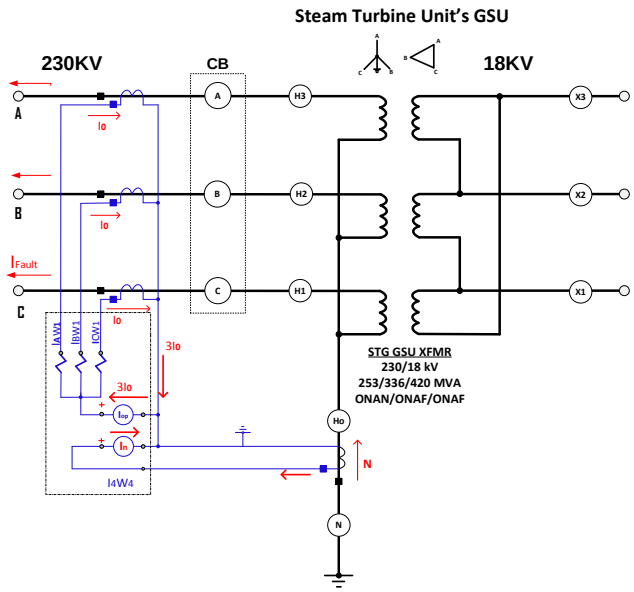

Fig.2 STG Expected wiring and current flow for a phase to ground external fault

Field investigation of the current transformers (CT) wiring revealed that the phase CTs summation point for the bank differential protection was mistakenly not terminated to ground, and the neutral CT wiring was grounded at the outdoors CT cabinet and also indoors at the relay terminals. Our standard practice is to ground the CT at a single point (see Fig. 2).

This unusual setup made the event analysis even more complicated because the grounds were made at different sides of the CT leads, such that the CT circuit was in parallel with the relay coil from one grounding point, through the ground grid and back to the other grounding points (Fig. 3 and 4). After this discovery, we realized that a lot more investigation was required. However, we were running out of time because the plant management was asking to go back in service as soon as possible. After a long discussion and negotiation with the plant operation management they allowed the protection and Test department to do the necessary work to bring the plant back for service after mitigating the wiring and the settings' issues.

The double ground, after a circuit analysis, justified why REF polarizing neutral current (I0W4) was so much smaller (1.5 to 2 times less) than the operating current (I0W1). As seen in fig. 4 the secondary currents split proportionately between the ground grid's impedance and the relay coil since the grounds were at two separate locations.

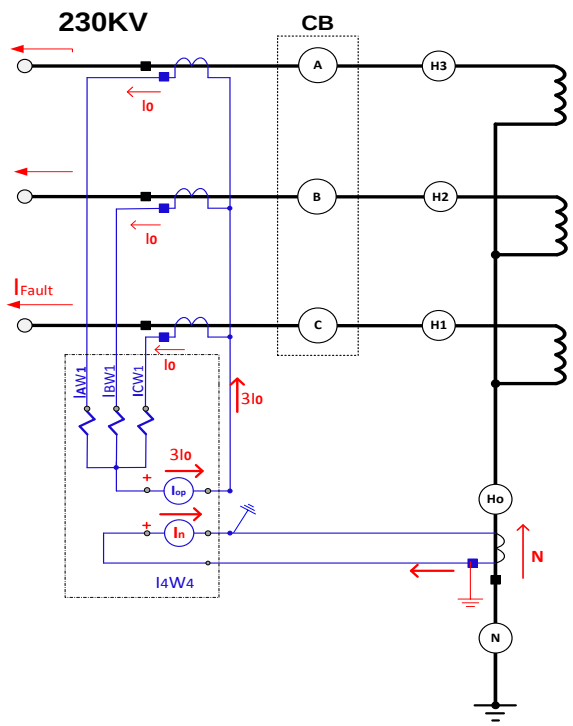

Fig. 3 As found CT connection and interpreted Relays current direction based on event records.

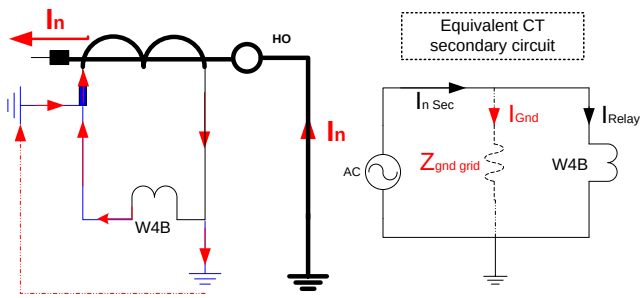

Fig. 4 Simplified, equivalent CT secondary circuit due to double grounding

The observation above led the protection Engineers to recommend checking all GSU's differential wiring for both the CTG1 and STG, verify all differential protection settings, and do load and directional checks before the plant goes back online after repairs.

2. *Restricted Earth operation*

The Restricted Earth Fault (REF) element is used to provide sensitive protection against ground faults in the last 30% of the wye-connected transformer winding since phase differential may not be sensitive enough to detect this kind of fault. The element is "restricted" in the sense that protection is restricted to ground faults within a zone defined by neutral and line CT placement. [4]

Field investigation revealed the sensitive ground relay's CT was wired wrong. Fig. 2 shows the expected simplified wiring of the GSU high side, Y-connected winding differential protection. The drawing does not show the CT connection for the 18kV side of the transformer.

Per the relay manufacturer's logic for the REF scheme, the relay to operate, it requires the CT to be Y connected. However, in this case, the CT circuit "star" point was not grounded, leaving the CT circuit floating, with no ground reference. With this wiring, under normal balanced conditions there are no issues since the voltage at the "star" point may be approximately equal to ground potential. However during fault or transient conditions the potential difference between ground and the CT's circuit can be significantly different. This voltage difference can very well lead to insulation breakdown and damage on all CT circuit equipment. For example, as the result of the field test after the event, one of the transformer differential protection phase CTs failed the insulation test. We believe the insulation failed during the fault, but it did not necessarily lead to the misoperation because the three phase differential protection did not pickup.

Additionally the lack of a voltage reference could also lead to induced currents on the CT circuit resulting in a false relay operation. Relay event analysis indicated there were uneven currents through the unaffected phase CTs with a difference in magnitudes between phase IA (1,810A primary) and phase IB (1,250A primary) (Fig. 8). The zero sequence current (3I0 = IAW1+IBW1+ICW1) was much greater than the recorded neutral current (IBW4) as seen in Fig. 5. We expect 3I0 to be equal and out of phase compared to the recorded neutral current if the CT "star" point was grounded as designed.

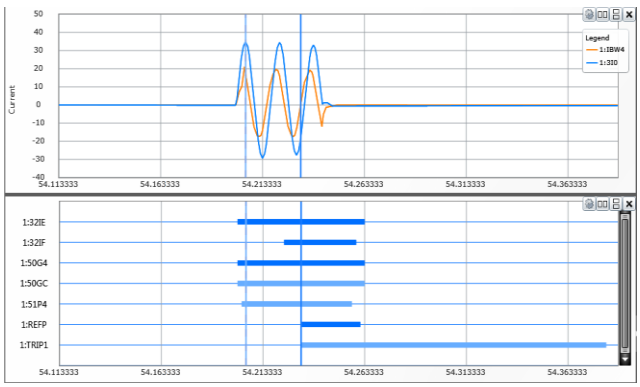

Fig. 5 Recorded operating 3I0 vs. polarizing IBW4 neutral Currents

As referenced in Figure-5 the trip occurred when REFP operated. For the discussion below refer to Figure-7 for REF scheme logic.

The REF is a low impedance ground differential scheme based on zero sequence current components. The logic compares the relay's calculated zero sequence current components of the recorded phase currents to the measured neutral current.

Co	Name	Mag	Angle
	1:I0W1.Phasor	6.15	-136
	1:I0W4.Phasor	4.06	-92.4

Phase CTR1 = 300:1
Neutral CTR4= 260:1

Fig. 6 Recorded Phasor 3I0 Vs Neutral current

Per the logic, REF is enabled if the measured neutral current is above the pickup setting element, 50GP. To prevent the directional supervision element 32IE from asserting if the CT saturates (or if the relay word bit CTS asserts), the directional element inhibit was set $E32I = !CTS$. The raw event signal did not indicate CT saturation, and E32I did not assert, allowing the forward direction element E32IF to assert.

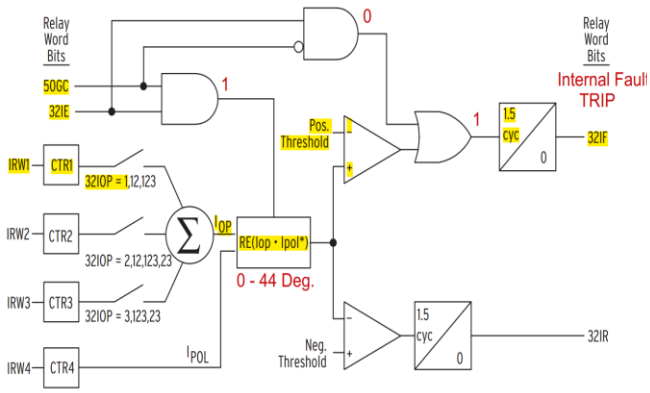

Fig. 7: SEL 387 REF logic diagram. Source SEL Manual

Per both relays' event reports, all the conditions were met to trip as if the fault was internal to the differential zone (see Fig. 7's highlighted elements). Note that the angle between the Operating current I0W1 and the polarizing current I0W4 stayed between -44 and 44 degrees from fault inception to the time the relay sent the commend to trip on REF.

To determine the direction of the fault, the relay calculates the product of the operating current (I_{op} or I0W1in our case) and the complex conjugate of the polarizing neutral current (I_{pol} or I0W4 in our case) [4]. This equation is also known as the relay's torque control (T). If the torque is positive, it means the fault if in the protection zone, otherwise it is external or out of the zone:

$$T = RE(Iop * Ipol^{*}) \qquad \text{(Equation 1)}$$

Equation 1 is mathematically equivalent to multiplying the magnitude of the two currents by the cosine of the angle between them:

$$T = |Iop * CTR1| * |Ipol * CTR4| * \cos(\theta_{Iop} - \theta_{Ipol})$$

From the event records:

$$|Iop| = 6.15 \; with \; \theta_{Iop} = -136°$$

$$|Ipol| = 4.06 \; with \; \theta_{Iop} = -92.4°$$

$$\begin{aligned} |Iop * CTR1| * |Ipol * CTR4| * \cos(\theta_{Iop} - \theta_{Ipol}) \\ = 6.15 * 300 * 4.06 * 260 * \cos(-43.6°) \\ = +1{,}410{,}384.08 \end{aligned}$$

Since the result is positive, it means the fault is within the zone. The relay waited for about 1.5 cycles before it called to trip on ground differential (REFP). In general the requirement is that the angle must stay between -90 and + 90 degrees for 1.5 cycles before a trip is issued.

For this event, the operation was incorrect for the STG GSU because:

1. The neutral CT was wired with two separate grounds (one inadvertently left at the outdoor CT cabinet and the other at the relay cabinet in the control building)
2. The phase CT star points were ungrounded for each relay winding contribution

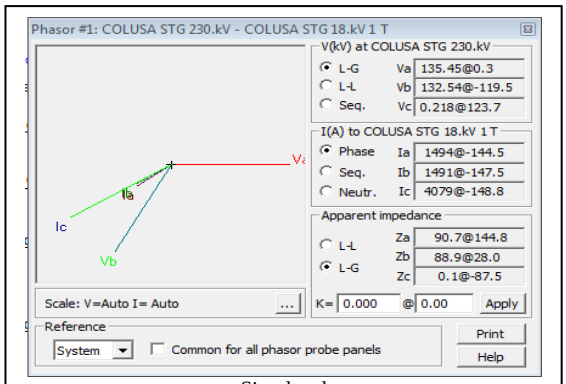

Simulated

Actual

B. *STG Stator damage evaluation*

Summary of the event

The inspection of the plant by field personnel, as the result of the CTG1 transformer bushing flashover operation, revealed that the STG sustained great damage to one of the stator's windings, which required a complete rewind. The burn marks were at the end windings towards the end turn of the generator stator. The fault locations were evidence of possible excessive vibration that may have caused the winding copper bar to break at specific points over time due to high cycle fatigue before the CTG1 fault. Figure 9 shows the picture of the actual stator winding damage at three different locations as described. It is possible that the Combustion Turbine unit 1 GSU flash over fault accelerated a pre-existing condition. Relay data event analysis concluded that the GSU busing failure was not the primary cause of STG winding failure, however there was still the lingering question of why the generator relays did not operate for such a significant winding fault.

Split phase winding

The Steam Turbine Generator in question is manufactured with a three circuits winding design, also known as "split phase" winding design. The stator has 72 slots, three parallel circuits, with eight coils per circuit. Figure 10 shows the simplified configuration of this type of winding. Terminal T-1 to T-2 make phase A, terminals T-2 to T-5 make phase B, and terminals T-3 to T-6 phase C.

As seen in Figure 10, each phase of the winding is made of three parallel circuits. A circle indicates where arcing occurred in the winding. Only one of the three circuits was interrupted. When it was learned that the STG had sustained significant damage in the split phase winding, it was determined there needed to be a closer review of the design drawings. Steam Turbine Generator relay event records also needed to be reviewed. It is important to note that the event recording settings in the generator protective relays where erroneously set, which further complicated the analysis.

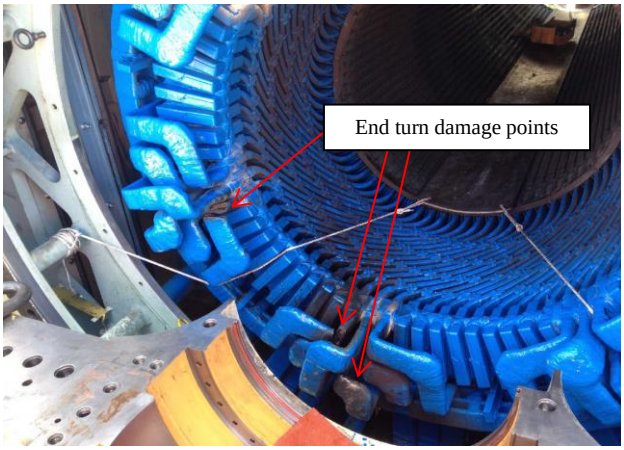

Fig. 9 STG Stator End winding damage

The design drawings' review revealed two important facts:

1. Relay split phase differential protection was not implemented.
2. Partial Discharge Analysis (PDA) Monitoring system was designed; however it was inadvertently not installed.

In this design, the PDA monitors the stator winding's insulation integrity and could have possibly helped detect the winding problem before it caused significant damage.

There was a question on whether the winding damage was a result of the GSU bushing fault or was a preexisting condition. Event data analysis showed that the fault was external to the STG and nothing within. The maximum RMS current contributions from the STG was approximately IA= 14,000A, IB=5,200A and the faulted phase IC= 19,200A. These values are from the relays located on the Delta connected 18kVside of the step up transformer. These values match almost exactly the simulated model of the system for an external fault (Figure 12.).

The sequence of events from all the other relays such the under voltage, the negative sequence and the distance elements protecting the STG machine, showed them picking up but did not initiate a trip. This observation helped us conclude that the fault was indeed external and the GSU's REF operated within three cycles and cleared the fault before the other elements.

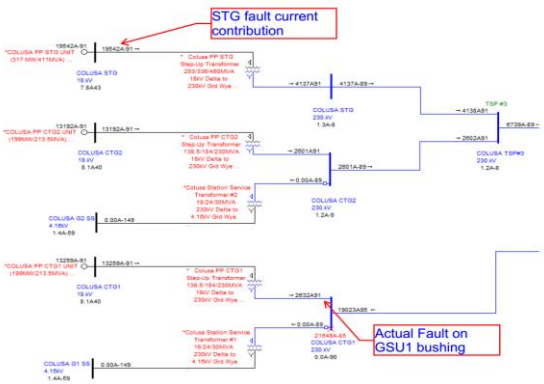

Fig. 11 Fault simulation showing the STG contribution: matches relays record the even

generator differential could not have operated. The reason the differential is not effective in these types of winding faults is because the relays just measure what goes in and what comes out! For an open circuit fault, as it was the case here, there is no differential current to detect. This winding configuration makes it a very difficult, or an impossible fault to detect with differential relaying, unless there is special protection such as a split phase protection appropriately designed for this machine. Split phase design was not part of the design.

Despite the protection deficiency and given the level of fault contribution recorded during the CTG1 GSU fault, we concluded that if the machine was healthy before the event, taking in account its rating, the machine should not have sustained the damage observed. This machine normal load rating is 13,792A (RMS). The RMS fault duty recorded during the event was about 19,200A for 3 cycles. Per IEEE C50.13 Section 4.2.2 the STG should have been able to withstand this fault with no damage. The generator stator shall be capable of operating at 150% of rated stator current for at least 30 seconds starting from stabilized temperatures at rated conditions [5].

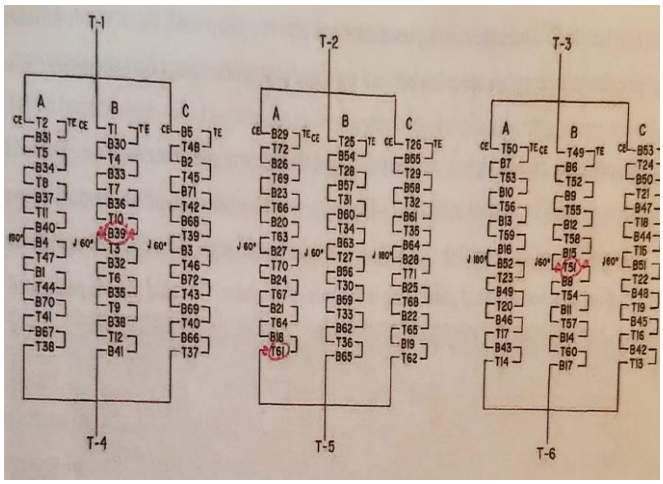

Fig. 10 Stator winding schematic diagram
Arcs located at B90, T61 and T51

IV. LESSONS LEARNED

A. *"Turn Key" Project Process*

Interconnection and generation projects need to be evaluated to ensure the protection schemes are specified and applied properly. Turnkey projects need special attention; these projects may have several different entities specifying the individual components and systems of the project. The entities can range from the individual component manufactures to the subsystem developer. In order to pull the individual pieces together there must be an overall project protection engineering and test team involved to provide the proper coordination for the overall project. The task would be to ensure the various protection elements and control schemes operate in conjunction with each other. In this case the project was fast tracked and there was a change in ownership which placed pressure to get the project on-line to meet the schedule. There was no overall project protection engineer to pull the various pieces together and perform the proper reviews during the design and

construction phase. In the case of this installation, split phase protection was not applied to the generator. Additionally CT wiring for the GSU relay was not properly verified during commissioning.

In order to ensure the protection schemes and relays are properly designed, selected and set, the review should consist of drawing and setting reviews, ensuring the proper relays are applied and wired correctly and provide adequate coordination.

The review steps are listed below:

- *Drawing review*-The following drawings should be reviewed:
    - **Single Line Meter and Relay** – Showing CT/PT interconnections to relays and other required control elements.
    - **DC schematic drawings** –These are schematic drawings for the required relays and circuit breakers that are used to separate the facility from the utility system.
    - **3 Line AC** – Showing relay CT/PT connections. Verify CT /PT polarity, ensure circuits are grounded properly (which was missed in this case).

- *Relay review*- Relays should be utility grade to ensure they will operate properly in the high voltage substation environment. Review the designated relay models, settings, and instrument transformer ratios for the proposed relays ensuring they meet the application. The selected relays should be familiar to the personnel who have to set and maintain the devices.

- *Functional Testing* -Prior to energization, the protection scheme should be function tested to ensure it operates per the design and as intended. The function test should include:
    - Trip checks.
    - Testing of interlocks, if applicable.
    - Indication and targeting.
    - Secondary current and voltage injection should be performed to verify CT/PT connections and ratios.

The relays should be bench tested to verify the applied settings. This could be accomplished by using test equipment to inject fault values which are provided by the protection engineer. The faults should consist of phase and ground faults that pick-up the Zone-1/Instantaneous elements and the Zone-2/time delayed elements along with out of section line faults to verify the protection pick-ups and relay targeting. Shown below is an example where a spread sheet is used to enter relay data. Figure-15 is the data entry from the fault simulation. These are converted from the fault study primary values to secondary values used by the test equipment as shown in Figure 15 sheet-2 below:

End to End Test Information for the Terminal 1-Terminal 2 two terminal Line

The breakers are (The CT and PT information shown was used to compute the secondary values contained withing the Fault Files.
Please Verify in the field):

Station A=	Terminal 1	Station B=	Terminal 2
CB No.=	1	CB No.=	2
CT Ratio=	400 :1	CT Ratio=	400 :1
PT Ratio=	1000 :1	PT Ratio=	1040 :1
LINE SIDE PT	☐	LINE SIDE PT	☐

SYSTEM VOLTAGE: 115 kV Prefault Current: 0.5 amps secondary
LINE LENGTH: 4.65 MILES

The following is a description of the end-to-end Doble test files and the Protection scheme response by terminal.
Load Current is programmed to be balanced 0.5 Amp Secondary from Terminal 1 to Terminal 2

1) IS (In-Section) 3 PHASE fault 50% of the line

Terminal 1 1	TRIP.	Zone 1 A-B-C Phase Target.	No Blocking Signal.	No HSRI	2.3 mi
Terminal 2 2	TRIP.	Zone 1 A-B-C Phase Target.	No Blocking Signal.	No HSRI	2.3 mi

2) IS (In-Section) A PHASE-Ground fault 5% of the line from Terminal 1 to Terminal 2

Terminal 1 1	TRIP.	Zone 1 A Phase Target.	No Blocking Signal.	HSRI	MODIFY TEST:	1.4 mi (30% from Met.)
Terminal 2 2	TRIP.	Zone 1 A Phase Target.	No Blocking Signal.	HSRI		4.4 mi (95% from Prcy.)

3) IS (In-Section) B-C PHASE fault 5% of the line from Terminal 1 to Terminal 2

Terminal 1 1	TRIP.	Zone 1 B-C Phase Target.	No Blocking Signal.	No HSRI	MODIFY TEST:	1.4 mi (30% from Met.)
Terminal 2 2	TRIP.	Pilot Trip Target.	Zone 2 B-C Phase Target.	No Blocking Signal.	No HSRI	4.4 mi (95% from Prcy.)

4) IS (In-Section) A PHASE-Ground fault 5% of the line from Terminal 2 to Terminal 1

Terminal 1 1	TRIP.	Pilot Trip Target.	Zone 2 A Phase Target.	No Blocking Signal.	HSRI	4.4 mi (95% from Met.)
Terminal 2 2	TRIP.	Zone 1 A Phase Target.	No Blocking Signal.	HSRI		0.24 mi (5% from Prcy.)

5) IS (In-Section) B-C PHASE fault 5% of the line from Terminal 2 to Terminal 1

Terminal 1 1	TRIP.	Pilot Trip Target.	Zone 2 B-C Phase Target.	No Blocking Signal.	No HSRI	4.4 mi (95% from Met.)
Terminal 2 2	TRIP.	Zone 1 B-C Phase Target.	No Blocking Signal.	No HSRI		0.24 mi (5% from Prcy.)

2) IS (In-Section) A PHASE-Ground fault 5% of the line from Terminal 1 to Terminal 2

Terminal 1 1	CT:	400	PT:	1000	Angles are different for Doble and Manta. Doble takes actual
Terminal 2 2	CT:	400	PT:	1040	Aspen Output angles (0 to +180 and 1 to -180)
SYSTEM VOLTAGE:		115	kV		For line side Potentials, trip post fault should be 0 Volts

Terminal 1 **Load from this bus onto line (SOURCE BUS for Prefault)**

	Aspen Output Pre Fault		Aspen Output Fault 1		Aspen Output Post Fault		PRE FAULT		FAULT 1		Post Fault	
	Values	Angle	Values	Angle	Values	Angle	Secondary Test Set		Secondary Test Set		Secondary Test Set	
VA	66.395	0	38.27	-4	66.395	0	66.4	0.0	38.3	-4.0	66.4	0.0
VB	66.395	-120	64.17	-116	66.395	-120	66.4	-120.0	64.2	-116.0	66.4	-120.0
VC	66.395	120	64.48	116	66.395	120	66.4	120.0	64.5	116.0	66.4	120.0
IA	200	-10	20087	-82	0	0	0.50	-10.0	50.22	-82.0	0.00	0.0
IB	200	-130	149	79	0	0	0.50	-130.0	0.37	79.0	0.00	0.0
IC	200	110	151	78	0	0	0.50	110.0	0.38	78.0	0.00	0.0

Terminal 2 **Load into this bus from line (LOAD BUS for Prefault)**

	Aspen Output Pre Fault		Aspen Output Fault 1		Aspen Output Post Fault		PRE FAULT		FAULT 1		Post Fault	
	Values	Angle	Values	Angle	Values	Angle	Secondary		Secondary		Secondary Test	
VA	66.395	0	13.98	-2	66.395	0	63.8	0.0	13.4	-2.0	63.8	0.0
VB	66.395	-120	62.85	-113	66.395	-120	63.8	-120.0	60.4	-113.0	63.8	-120.0
VC	66.395	120	62.65	113	66.395	120	63.8	120.0	60.2	113.0	63.8	120.0
IA	200	170	1965	-78	0	0	0.50	170.0	4.91	-78.0	0.00	0.0
IB	200	50	306	109	0	0	0.50	50.0	0.77	109.0	0.00	0.0
IC	200	-70	305	109	0	0	0.50	-70.0	0.76	109.0	0.00	0.0

Fig. 11 Fault simulations used for relay bench testing

- *Energized testing* -When the interconnection or the station is first energized, PT and CT connections can be verified with actual load voltage and current. The obtained values are compared to a proven reference. A reference can be current and voltage values from a remote line relay. The obtained current and voltage quantiles are corrected to account for the reverse MW and MVAR flow from the remote terminal. Listed below is an example of a direction check for verification of relay's CT/PT connections.

STATION NAME: _____ DATE: _____ GM: _____

EQUIPMENT: CB-212 Dev 221/267NB-1 SWITCH #: _____

INSTALLATION: No ROUTINE: _____ OTHER _____

TESTED BY: _____ SERIAL #: _____

STATION READING: 22 MW OUT (+) IN(-) 5 MVAR OUT (+) IN(-)
233.9 kV 58 AMPS

SEL READING: 23 MW OUT (+) IN(-) 5 MVAR OUT (+) IN(-)

As Seen on Relay	Ia	Ib	Ic	Va	Vb	Vc
PG&E	Ia	Ic	Ib	Va	Vc	Vb
Y-Component	-60.0	26.0	32.0	-131.2	38.0	93.0
X-Component	-1.0	-52.0	51.0	31.7	-130.1	98.6
Magnitude	60.0	58.1	60.2	135.0	135.5	135.5
Angle from X-axis	269.0	153.4	32.1	283.6	163.7	43.3
For Phasor Diagram All angles shifted so Va is at 90 degrees.	-14.5	-130.1	-251.5	0.0	-119.9	-240.3

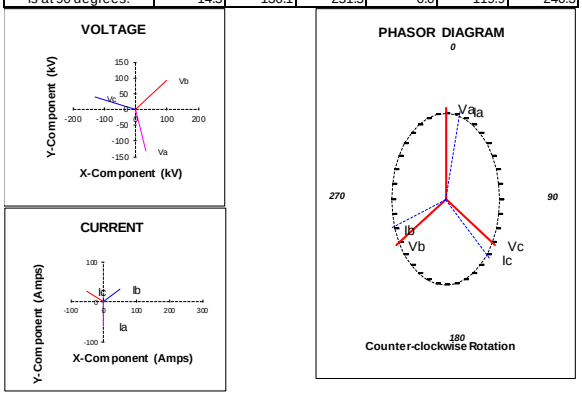

Fig. 12 Direction check form

NERC Requirements:

In recent years various NERC requirements have been developed. These requirements range from protection element setting, utility to non-utility coordination, and fault recorder requirements. Could these requirements have prevented the gaps that led to the relay misoperation and generator damage? Several of the applicable PRC requirements are noted below:

- PRC -001-2 –Verifies protection coordination of all new protection systems and all new protective system changes with its neighboring Transmission/Generation and Host Balancing Authority. This also requires ongoing review when there are major setting or system changes.
    - R1 Each Transmission Operator, Balancing Authority and Generator Operator shall be familiar with the purpose of the limitations of Protection System schemes applied in its area.
    - R2. A Generator Operator or Transmission Operator shall coordinate new protective systems and changes as follows:
        - R2.1 Each Generator Operator shall coordinate all new protective system changes with its Transmission Operator and Host Balancing Authority.
        - R2.2 Each Transmission Operator shall coordinate all new protective systems and all protective system changes with neighboring Transmission Operators and Balancing Authorities
        - R3 Each Transmission Operator shall coordinate Protection System on major transmission lines and interconnections with neighboring Generator Operators.
- PRC-002 Fault Recorder Requirements. Establishes requirements for Fault/Disturbance Event Recorders. Ensuring subsequent operations will have data for review.
- PRC-19-2 – Generation exciter protection and control requirements. Ensures the generator exciter limiters and protection are properly coordinated. Prevent the exciter protection from inadvertently tripping the unit from a recoverable system transient.
- PRC 23.4/25.1 Transmission line and Generation relay loading requirements. Ensure relay settings will not operate under maximum loading conditions.
- PRC-24-2- Generation voltage and Frequency- Ensure generator protective relays are set such that the generating units remain connected during defined frequency and voltage excursions.
- The standards ensure the bulk electric system is not adversely affected from the failure of a component or that a stable system event will not result in a cascading loss of elements. These standards do not cover the individual loss of an element; therefore the issues leading to this event would not have been mitigated by present or future NERC standards.

B. FERC order 1000: The need for Collaboration to insure reliability of the Bulk Electric System

FERC Order 1000 allows the installation of 3rd party substations in areas historically served by utilities. The new facilities could be switching stations installed on a transmission line. These stations are built, owned and maintained by the 3rd party, hence they need to coordinate and have the same level of review of their protective schemes as those for generation and load interconnections. In the example below the interconnecting utility stations located at A, C and D need to coordinate with the relays located at Station B, which is the same as the requirements for typical 3rd party interconnections.

As a Transmission Operator the FERC 1000 station owners also have to comply with the above NERC requirements. Compliance with these requirements should ensure the station is designed and maintained so that bulk electric system reliability is not degraded. California is the first in the nation to have FERC 1000 installations.

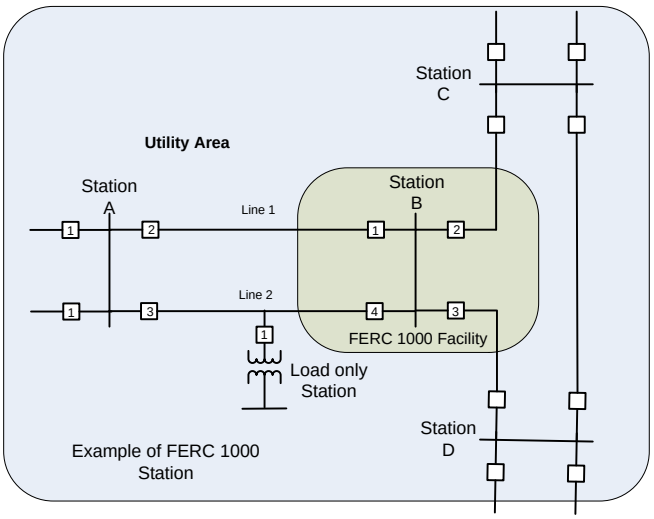

Fig. 13 Typical 3rd party Interconnection

V. CONCLUSION

In today's world of competitive bidding for large regional projects, Transmission and/or Generator Owners are not the sole entity in control of the equipment design and resources. For example, for a typical EPC "Turn-key" project, the owner hires a third party company to engineer, procure and construct the project. The contracted firm "turns in the key" once the project is ready for service. The experience shared in this paper calls for a review of the process of a typical EPC project in order to address some of the gaps that led to this event.

Protective relays are the silent sentinels of the electric system. Rules and policies need to be in place to allow the protection schemes to safeguard the power system. For large "turn-key" power projects built to be owned and maintained by a Transmission or Generator Owner, there should be an overall engineering and testing team to oversee the project in its entirety from the initial design phase to construction and final functional testing. This will provide the consistency and overview needed to pull the individual pieces together to create one functional facility.

REFERENCES

[1] "Power Plant and Transmission System Protection Coordination," NERC Technical Report, Revision 1 July 2010. (available on the NERC website).

[2] IEEE Guide for AC Generator Protection, IEEE Std C50.13-2014. "Protective Relaying Theory and Applications" edited by Walter A. Elmore, ABB Power.

[3] "Final Report on the August 14, 2003 Blackout in the United States and Canada: Causes and Recommendations," U.S. – Canada Power System Outage Task Force, April 5, 2004.

[4] "SEL-387 Relay Instruction Manual", Schweitzer Engineering Laboratories, Inc., 2014.

[5] IEEE Standard for Cylindrical-Rotor 50 Hz and 60 Hz Synchronous Generators Rated 10 MVA and Above, IEEE C37.102-2006.

[6] IEEE Guide for Differential and Polarizing Relay Circuit Testing, IEEE C37.103-2015.

[7] "Regulatory Update NERC-PRC Standards Changes", TRC Companies,Inc. November 5, 2015.

VI. BIOGRAPHIES

Mike Jensen is a Principal Protection Engineer with Pacific Gas and Electric, with 24 years of transmission protection, substation design, and nuclear power plant maintenance and design experience. He served six years in the U.S. Navy on board nuclear submarines. Received a BS in Electrical Engineering from California Polytechnic University, San Luis Obispo in 1992 and is a registered professional engineer in the state of California. He is a member of IEEE and several IEEE working groups, and served on NERC drafting teams.

Lokoko L. Kitenza is a Senior Protection Engineer with Pacific Gas and Electric Company in Sacramento, California. He has 11 years' in protection and control, in addition to 5 years' experience as distribution planning Engineer. He has a Master's of Business Administration (MBA) with focus in Energy Management. He received his BSEE in 2001 from Montana State University, in Bozeman, Montana. He worked as an Engineering Technician, to test and troubleshoot analog signal circuits designed to control and monitor lasers, photodetectors, and other photonic components at ILX Lightwave in Bozeman, MT. He has also worked as a fire protection Technician at Fire suppression Systems in Bozeman, MT. He was a Vocational School Teacher in Africa and worked as humanitarian Electrician and logistician in Tanzania. In 1989, he received a higher Diploma in Industrial Electricity from a Catholic Brothers Vocational high school in the Democratic Republic of Congo. He is a member of IEEE PES (Power & Energy Society).