THERMAL IMAGING: JUST A NOTE, NOT THE WHOLE TUNE

Paper No. PCIC-(do not insert number)

Shelly DeGrate
Member, IEEE
Powell Electrical Systems, Inc.
8550 Mosley Road
Houston, TX 77075
USA
shelly.degrate@powellind.com

James Payne
Member, IEEE
Valero Refining Company
1801 South Gulfway Drive
Port Arthur, TX 77640
USA
jim.payne@valero.com

Roy Belak, P.Eng
Member, IEEE
Powell Canada, Inc.
201-55 Gostick Place
North Vancouver, BC V7M 3N2
Canada
roy.belak@powellind.com

Abstract – A rigorous thermal monitoring regiment is considered standard by those responsible for maintaining critical electrical infrastructure. As thermal imaging technologies mature and infrared (IR) cameras become increasingly ubiquitous, it becomes necessary to understand any limitations that may be imposed by methods that capture data infrequently. This paper will frame the benefits of thermal monitoring in an industrial process environment, including thermal imaging, and contrast them with continuous thermal monitoring. Attention is focused on medium and low voltage switchgear due to their prevalence in these industrial conditions. In particular, continuous thermal sensing with fiber-optic based sensors will be reviewed, along with installation considerations and methods for analyzing data.

I. INTRODUCTION

For decades, thermography has been the primary method for detecting thermal conditions, or hotspots, within electrical equipment. Many industrial facilities have incorporated thermal imaging, or infrared (IR) scanning, into their preventative maintenance plans. These plans, however, have many implementation limitations.

Loosely bolted connections and circuit overloading are some contributors to the rise in temperature at electrical connection points. Organizations like the NFPA have recognized that "Temperatures over design levels for prolonged periods can reduce the electrical life of organic insulating materials" and can "cause physical deterioration of the materials, resulting in lowered mechanical strength."[1]. If an infrared snapshot is only one note in the tune, then how does the rest of the melody sound? What is happening with the equipment during peak operating conditions; during the heat of the summer; after maintenance or retrofit activities?

The need exists for monitoring of internal thermal conditions of electrical equipment, on a continual basis, so the whole tune of equipment performance can be heard. Captured data could be utilized as a basis for a predictive maintenance plan, saving time and money by identifying potential issues in advance of turnaround activities, or worse, a catastrophic event.

II. INDUSTRIAL JUSTIFICATION FOR CONTINUOUS THERMAL SENSING

From the perspective of an industrial end-user, there are many advantages to establishing continuous thermal monitoring on critical equipment. Various temperature sensing technologies exist, all with differing technical attributes, robustness and costing models, but all are essentially intended to provide the following benefits to those that use them.

A. Improving Worker Safety

Modern industrial facilities are continuing to place more emphasis on personnel safety utilizing the guidelines set forth in NFPA 70E [2]. As a result, many formerly accepted inspection practices are no longer permitted. In the recent past, it was common for a plant electrical worker to open enclosures on energized 480V and higher equipment for inspection and testing using everyday clothing and tools. This activity now requires significant Personal Protective Equipment (PPE) be utilized, and under some circumstances, may not be allowed at all.

Improved personnel safety, above all else, is the predominate reason to embrace alternate technologies to execute hazardous tasks without sacrificing end results; including those gained from infrared thermal imaging.

B. Improving Reliability of Thermal Measurement

One of the most significant challenges with thermal measurement on electrical equipment is gaining visual access to the equipment being measured. In an effort to obtain the most accurate assessment of the temperature rise, equipment must be surveyed during peak load conditions which require the removal of bolted covers or opening of hinged covers or doors to expose the electrical conductors. NFPA 70E has created hazard/risk categories associated with gaining access to energized equipment. Table 1 represents an excerpt from the standard which details the significance of the risks associated with working around energized equipment. It should be noted that Hazard Category 4 is the highest allowable under the guidelines.

TABLE I [2]
NFPA 70E TABLE 130.7(C)(9)(a)
EXPOSURE OF BARE, ENERGIZED PARTS

EQUIPMENT	HAZARD/RISK CATEGORY	
	Removal of Bolted Covers	Opening of Hinged Covers
600V Class MCC	2	1
600V Class Switchgear	3	2
NEMA E2 Motor Starters 2.3kV-7.2kV	4	3
Metal Clad Switchgear 1kV & Above	4	3

Infrared windows provide a solution to that problem by allowing IR cameras to capture thermal data on energized equipment. However, infrared windows do not allow for complete line-of-site access to all critical electrical connections within a switchgear enclosure. Often, cables and safety barriers obstruct the view of the connections that need to be monitored. Fig. 1 depicts a new switchgear installation with cable chimneys that block the view of the B phase lug on the landing pad.

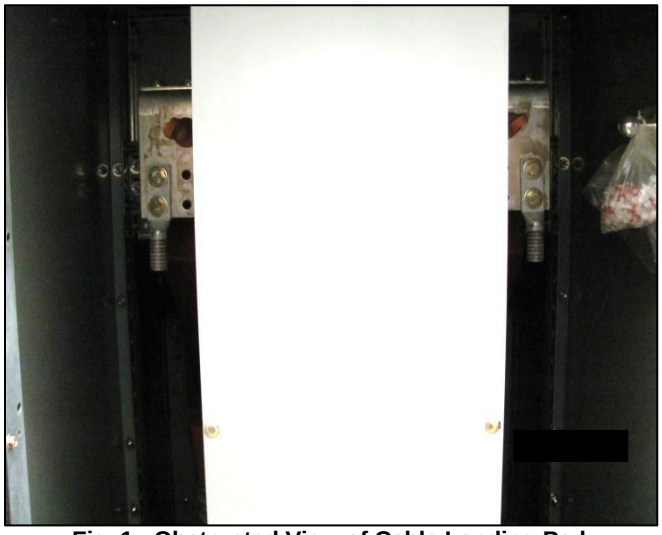

Fig. 1 - Obstructed View of Cable Landing Pad

Fig. 2 is an image of discolored bus bar which had clear signs of thermal fatigue due to overheating. This discovery occurred at an industrial facility during a scheduled outage. Barriers within the construction of the switchgear obstructed the view of the bus. The switchgear gave no indication of issues prior to the inspection.

Fig. 2 - Discolored Bus Bar Exhibits Signs of Overheating

C. Improving Maintenance Plans

1) Planned Outages: Process related industrial facilities present many challenges for maintaining critical electrical equipment as outages must coincide with process outages. Major electrical maintenance is often scheduled during a plant turnaround. Historically, the maintenance performed during a turnaround has been detailed and extensive. This allows the maintenance department or contractor to open up most electrical enclosures for thorough inspections. As markets have become more competitive, Companies' focus on cutting costs has increased. Additionally, the opportunity costs associated with keeping process units down for extended periods of time is no longer acceptable. This has significantly impacted maintenance budgets and schedules during turnarounds and makes thorough inspections of every piece of electrical equipment difficult to achieve. One of the methods companies have adopted to deal with the reduced budgets and schedules is a risk-based maintenance program.

A risk-based maintenance program evaluates the past performance of equipment to determine the necessity of performing maintenance on that equipment. While there are multiple methods of compiling standard metrics to make an assessment on process equipment, major electrical equipment is difficult to assess in this way because the data is not as readily available. Temperature rise is a good predictor of possible failures, but the traditional method of IR imaging to gather this information only captures a snapshot of the actual operating temperature of the equipment at a specific moment, and does not provide a complete life cycle story.

2) Preventing Unplanned Outages: In a particular industrial facility, outages on process units due to electrical failures can result in several days of lost production. The costs associated with lost production and repairs can be tens of millions of dollars. Facility management expects proactive maintenance plans be in place to prevent such outages. A continuous thermal monitoring approach provides the historical

data needed to create such corrective and preventative plans and facilitates decision making at management level.

Using data from a continuous monitoring method, trends can be developed to help identify immanent failures before they occur. A plan for an outage can be developed and presented to management allowing proper decisions to be made on scheduling an outage.

3) Investigation reports: Equipment failures resulting in process outages can cause significant production loss and environmental impact. Facility executive management and environmental agencies require a detailed explanation of the problem as well as a corrective action plan that will prevent the problem from occurring again. The historical data provided by an online thermal monitoring system allow engineering and maintenance staffs to provide a complete picture of a failed piece of equipment in the incident investigation. This can be incorporated in the investigation report presented to management and outside agencies. Similar equipment can then be inspected to prevent future failures.

III. MANUFACTURED EQUIPMENT

A. Design Decisions

The costly effects of scheduled maintenance turnarounds, or equipment failure shutdowns, puts a substantial expectation on the electrical manufacturer to provide equipment capable of being subjected to long intervals between shutdowns. Additionally, if the equipment is "inadequately engineered, designed, and constructed, it will not provide reliable service, no matter how good the maintenance program."[1]

With careful planning and design, manufacturers work with end-users in an effort to construct systems which provide flexible, expandable systems without exceeding current, or future, loading expectations. In addition, manufacturers rely on end-user input for the inclusion of IR windows into the construction; incorporating a range of 1 to 3 windows per section, if they are included at all. If included, the typical focus is limited to the visibility of cable landing pads for field connections.

These design decisions are direct indications of end-user awareness of overheating potentials which can occur inside equipment enclosures. IR windows allow closed door, visual access to field connections, where human errors can occur. The problem, however, is that no visual access is available for the main bus or breaker compartments in most designs, nor is it safely accessible to facility personnel when under loaded conditions.

The engineering and production costs associated with including IR windows into switchgear construction are not prohibitive. Certainly window size, material type and number of windows per section will increase the construction price; however, the end user will recognize the majority of costs during their maintenance activities. A cost comparison could encompass:

- Production Time Lost (Process & Personnel)
- Contractor On-Site Time
- Report Development Time
- Report Analysis Time

The long term cost impact associated with a permanently installed thermal monitoring system, could be significantly less than an IR imaging project, and maintenance budgets could recognize a reprieve from those expenses. Most importantly, there would be no human interface accessing the live, loaded equipment to gain that snapshot of thermal data.

B. Thermal Monitoring Technologies

There are several technologies in the marketplace today which can generate thermal data in electrical equipment. All of which are manufacturer neutral in their installations. Some technologies evolved from other markets, and some were designed and tested specifically for the electrical market, so careful consideration should be taken when selecting one for an application. Some considerations could include:

- Impact of switchgear ratings to installed technology
- Product certifications (UL/CE)
- Size of any ancillary equipment needed for technology installation (e.g. brackets)
- Access to replacement components (e.g. batteries, adhesives)
- Proper technology locale for measurements
- Emissivity issues
- Calibration expectations
- Expectations of data (absolute T vs. delta T)
- Communication compatibility with existing monitoring or maintenance systems
- Independent product software
- Ease of installation

All methods for continuous thermal measurement include some form of permanently mounted sensors within the electrical equipment. From wireless technology to mini-camera types, in all cases once the sensors are in place, thermal data is logged at set intervals without the need for operator intervention. The data could then be sent to a local power monitoring system or a plants process system, allowing maintenance personnel and/or engineering staff access to the data for analysis without having to open the equipment for inspection.

The direct contact method of continuous thermal measurement utilizing polymer fiber optic technology has advantages in medium voltage switchgear applications. Fig. 3 and Fig. 4 show a typical installation. Fiber-optic cabling is installed directly on the connection points using standard sized ring lugs and secured under the insulation boots which reduces internal construction modifications and maintains traditional safety practices.

Continuous thermal monitoring offers substantial benefits when compared to methods providing data collected at discrete infrequent periods. The ability to determine equipment condition from real-time data has been proposed in many instances [3][4]. The efficacy of determining condition is highly correlated to the quality and quantity of data available.

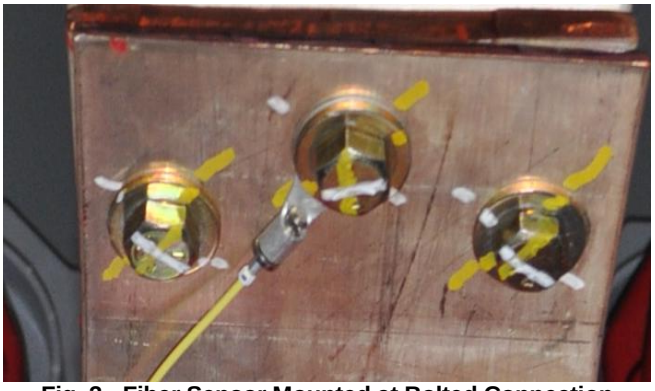

Fig. 3 - Fiber Sensor Mounted at Bolted Connection

Fig. 4 - Fiber Optic Thermal Monitoring Solution Emerging from Protective Boots

C. Thermal Monitoring Equipment Locations

When selecting locations for installing permanently mounted sensors on switchgear, many factors must be considered to ensure they are placed efficiently. Some of these include:

- Probability of thermal failure at the location
- Proximity to secondary failure locations
- Local conductive, radiative, and convective transfer
- Availability of permanent mounting options

After careful analysis of these factors, three locations, at each of the three phases (for a total of 9 sensors) had been determined as most critical for sensor placement. These are detailed on a generic enclosure shown in Fig 5. This is a common configuration, and there are many permutations that can be implemented based on differing geometry, configuration, or points of interest.

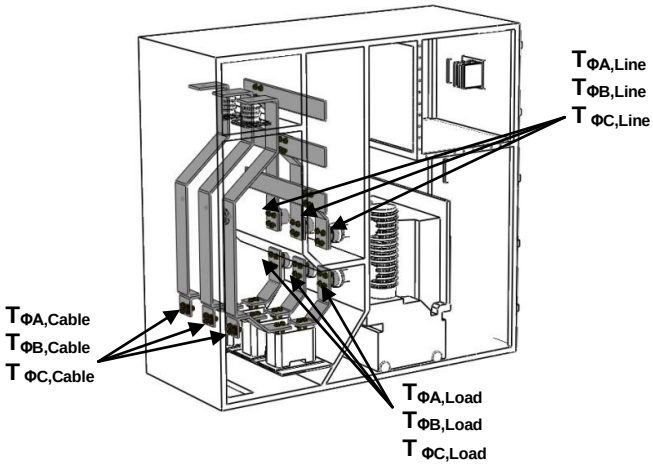

Fig. 5 - Recommended Thermal Monitoring Connections

These temperature variables measurement locations are defined by:

$T_{\Phi X,Y}$	Temperature of phase X at location Y
ΦX	X being either phase A, B, or C
Y	Y are Line/Load/Cable connections.

As an example, consider the temperature variable $T_{\Phi A,Load}$, will can be precisely located at:

Phase:	A
Location:	Load Connection

A continuous thermal monitoring solution allows the prediction of potential fatal situations by providing temperature data from main bus connections or inside the breaker compartments – locations that are completely inaccessible to IR scanning. Table 2 is sample data from thermal qualification testing on one-high 38kV and 12kV switchgear from two prevalent brands.

TABLE 2
SWITCHGEAR THERMAL QUALIFICATION DATA

Equipment Specs	Phase	Location Upper (Line) Lower (Load)	ΔT (ºC)	Visible
V: 38kV I: 3kA Short Circuit: 40kA	A	Upper Stab Lower Stab	+9.6	No Yes
	B	Upper Stab Lower Stab	+11.7	No Yes
	C	Upper Stab Lower Stab	+16	No Yes
V: 12kV I: 1.6kA Short Circuit: 50kA	A	Upper Stab Lower Stab	+14.6	No Yes
	B	Upper Stab Lower Stab	+16.8	No Yes
	C	Upper Stab Lower Stab	+12.4	No Yes

The table reveals the upper or line stabs having consistently higher measured temperatures than the lower or load breaker stabs varying in temperature an average of 13.5ºC between them. If environmental or other factors were present, temperatures could be even higher. The fact that the highest

temperatures in this equipment type are found in locations completely invisible to IR provides significant justification for the placement of sensors in the main bus compartment.

Currently, there is no technology platform ideally suited for direct mounting on the breaker itself. Although some wireless technologies can accomplish this [3][4], breaker interchangeability and servicing is poorly accommodated to the point of being impractical. As a proxy to mounting directly on the breaker, sensors mounted on the pressure connections between primary disconnect and connecting bus as described on the previous section and shown in Fig. 5 are ideal, but other configurations are possible, depending on equipment construction.

E. Dielectric Validation of Optical Fiber

There are an infinite number of installation situations and configurations, depending on things like sensor technology, monitoring location, type of electrical equipment, and many other factors. For this reason, a generalized approach to validating sensor installation should be taken to ensure that a given technology is suitable for any given application.

Components intended for to be used for contacting energized components must be capable of withstanding the inherent dielectric stresses native to the installation without compromising equipment integrity. In the case of ANSI medium voltage switchgear, the primary dielectric considerations are Power Frequency and Lighting Impulse (as specified IEEE C37.20.2-99) when validating designated voltage class. These well-defined test methodologies exist for the validation of the dielectric robustness of switchgear designs. Switchgear manufacturers have used these results to develop the previously mentioned Guide Specifications for things like air clearances, creapage distances (over-surface tracking) and other properties.

Apart from extensive in-situ testing, one of the approaches taken to validate the suitability of the optical fibers for the application was to create a standardized test fixture. The fixture is intended to simulate the most common fiber installation geometries and determine what, if any, effect the optical fiber has on dielectric ratings of switchgear. Maximum field strengths were calculated based on recommended minimum creapage distances for each standard voltage class within the medium voltage domain. The highest field strengths, and subsequently worst-case occurred for insulated bus designs rated for 38kV (providing a field with a rating of 7.27 kV/inch. The standardized test fixture in Fig. 6 was then constructed to 38kV clearances to accommodate a fiber installed in two phase to ground orientations. In one orientation the fiber path to the ground plane passes between two phases and in the other it goes directly.

Fig. 6 – Standardized Test Fixture

The results showed that under standard operating conditions on designs utilizing voltages of 38kV or under, the particular optical fiber of used with sensors under test would not compromise dielectric integrity.

TABLE 3
DIELECTRIC TESTING OF OPTICAL FIBER

Voltage Class	# of Fibers	# of Pass	Pass PCT
13.8kV	Pending	Pending	Pending
38kV	Pending	Pending	Pending

IV. TECHNICAL EVALUATION

B. Absolute Accuracy Considerations for Infrared

Infrared photography is a valuable tool for identification of thermal hotspots, particularly in high-voltage transmission and distribution environments where equipment such as insulators and arrestors are prevalent and easily accessible by line of sight [5]. In any environment, there are well documented considerations that the operator of an infrared scanning tool must address when attempting to obtain accurate absolute measurements [6][7]. To validate these findings, a study was conducted with a test fixture (Fig. 7) in order to provide a relative comparison between the absolute accuracy of NIST traceable thermocouples, fiber optic probes and a high-end commercial infrared scanner.

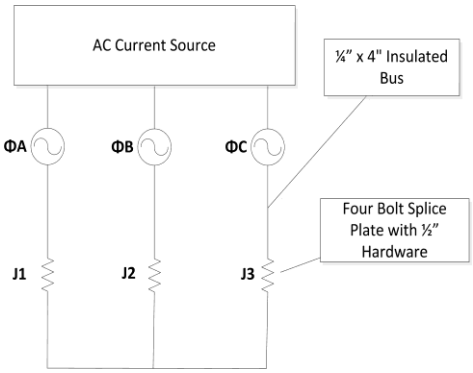

Fig. 7 - IR Comparison Test Fixture

During the testing protocol, it was found that infrared thermography provided a plethora of information, but was primarily useful in a relative context – i.e. when comparing similar components with similar geometry to each other. Comparison of absolute accuracy for infrared imaging included a significant variable which could not be easily accounted for in the experiment – the operator. Conversely, both thermocouple and fiber optic sensors had very little, if any, opportunity for the introduction of human error once installed correctly.

Accurate absolute measurements of infrared temperatures were affected, in decreasing order by the factors shown in Table 4.

TABLE 4
POTENTIAL SOURCES OF ERROR DURING IR SCANNING

Property	Description	Effect on Meas. Accuracy
Target Emissivity Setting	Operator must select object emissivity between 0 (reflector) and 1 (blackbody)	Drastic – if incorrectly set can result in significant inaccuracy
Reflected IR Radiation	Adjacent heat sources will contaminate readings if a reflective path exists	Moderate – can only falsely increase readings
Viewing Angle	The angle between IR sensor and target	Moderate – can only falsely increase readings

In addition to the issues observed directly above, several other factors affecting accuracy are commonly referenced in literature [6], but were beyond the scope of testing. These relate particularly to the use of IR windows in switchgear applications.

1. Compensation for signal attenuation through IR windows by operator
2. Degradation in thermal transmission characteristics of IR windows over time

Although comparison-type measurements were found to be the most suitable domain for IR imaging, there were several examples where the conditions resulted in misidentification of the hottest junction. Fig. 8 shows an IR image of the test fixture under operation. For this portion of the test, there is an induced hotspot under the silicone boot on pressure connection J3, representing a poorly tightened bolted connection. The image indicated that J1 (the control) is hottest at 73°C (163°F), when the thermocouple and fiber optic data in fact recognize J3 as being ~23°C hotter at 96°C (205°F).

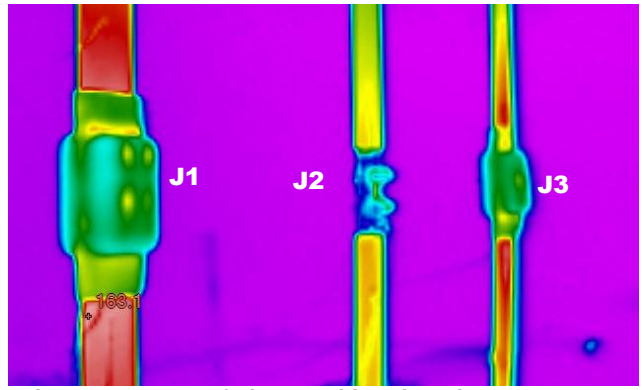

Fig. 8 - IR Image of Fixture with Induced Hotspot on J3

In terms of identifying which visible location was hottest, and therefore at highest risk of failure, IR performed adequately under most circumstances. With that in mind, the validity of absolute measurements from IR thermography will always include substantial uncertainty due to the known effects of potential errors that can be introduced by the operator.

C. Analysis of Thermal Data from Primary Disconnects

In order to fully benefit from the continuous data stream emanating from the fiber-optic sensors, or any real-time sensor for that matter, the data must be filtered and then screened automatically. Using fully automated algorithms that only warn operators of pending failures with absolute certainty would be ideal, but in practice this is unlikely due to the complexity of the problem. Differing equipment configurations, operating conditions, and performance expectations from installation to installation will all result in vast parameter space that makes identifying a universal "Thermal Event" extremely challenging. In this context, a Thermal Event is any event that causes the thermal profile of a piece of equipment to deviate significantly away from the norm – a warning per se. An event allows the operator to be made aware of a non-standard situation and use their judgment to determine the best course of action. The options would range to anything from: take immediate remedial action, schedule maintenance at an appropriate timeframe, or even to override the event if is determined the cause is not jeopardizing operations.

Using typical data from an installation on a fan-cooled tie-breaker within a process facility, one can illustrate some of the options for data interpretation and generation of thermal events. The sensors are mounted on the connections between the primary disconnecting devices and the bus, as suggested in Fig 5. These mounting locations are selected as they provide the closest points to the finger cluster/stab interface and can be used as a starting point for determining breaker condition.

It is now possible to propose and present some general conditions that can be used for the generation of thermal events and operator alerts.

1) Ambient Temperature Compensation: The effects of ambient temperatures essentially appear as low frequency noise (typically with a periodic nature following the diurnal cycle), and contribute information of limited use from a diagnostic perspective. Removal of ambient can be done with easily with any of a number of approaches. The most accurate and expensive is adding another sensor at "ambient" and the subtracting it measurements. Another approach, suggested in [8], is the subtraction of temperatures obtained at comparable locations from each other. This method assumes the ambient at the phases being compared is the same.

$$T_{\Phi A\text{-Load}} - T_{\Phi B\text{-Load}} \qquad (1)$$

Graphing Eq. (1) on Fig. 9, one can easily see the consequences of ambient removal and how much effect it can have if not considered. Notice the attenuation in signal noise following ambient removal, making detailed analysis drastically simplified. A basic conditional filter is then applied to Eq. (1) and shown graphically on the Thermal Event Line. It shows that no thermal events were present based on the removal of ambient. In this case, this is the expected result.

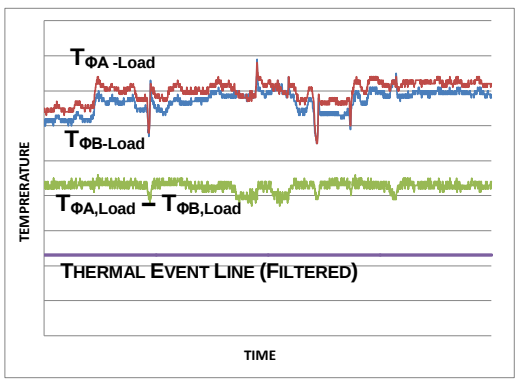

Fig. 9 – Ambient Removal by Subtraction of Adjacent Phases

2) Operating Current: It is well known that the primary source of heat generation from medium voltage switchgear is due to two sources of Joule heating which are both varied by the second power of current:

1) Resistive nature of metals
2) Resistive properties of connections

Applying a similar rational to that used for the removal of ambient temperature effects, one can attempt to remove these effects of operating current very simplistically by subtracting two temperatures on the same phase. By definition, these will have to be at different locations. This ensures that current flowing through the junctions is identical. In the case of Phase A in the example data, this is:

$$T_{\Phi A\text{-Load}} - T_{\Phi A\text{-Line}} \qquad (2)$$

This will also have the consequence of attenuating ambient temperature effects, but the result will not be as highly correlated as Eq. (1) due to the differing thermodynamic variables at each junction location. Notice the thermal events occurring as one set of disconnects heats up asymmetrically compared to the others. This particular event occurs during periods when forced-air cooling from a fan is shut-off and the main bus compartment begins to heat. Once this is recognized, the significance of this type of Thermal Event can be determined.

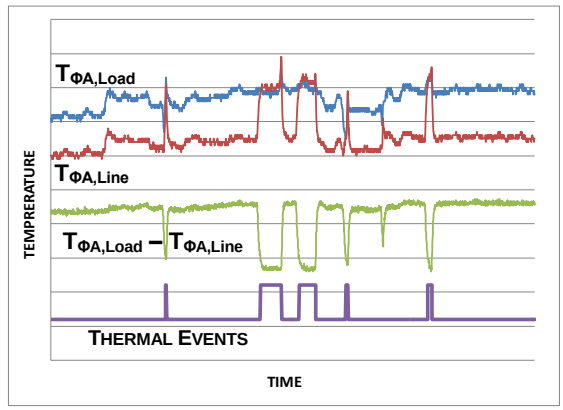

Fig. 10 – Subtraction of Adjacent Temperatures on Same Phase

3) Absolute Temperature Alarms: The simplest type of thermal event can be realized by setting a trigger threshold at specific temperatures on any individual sensor. Although useful, this type of Thermal Event is best used as a "last resort", as there will have been many opportunities to catch dangerous situations beforehand.

4) Advanced Events: With the combination of six sensors monitoring the breaker by proxy, there are many more sophisticated algorithms that can be used to determine more subtle or challenging conditions. With tuning, these can start to become the bases for a condition-based monitoring regiment that notices trends, logs them as event and uses the events as a database for determining maintenance schedule. Table 4 presents the beginning of a set of Thermal Events, along with the simplified corresponding conditions which can trigger them.

TABLE 5
ADVANCED THERMAL EVENT DETECTION

Event Trigger	Description	Possible Cause
$T_{\Phi B}<T_{\Phi A}$ $T_{\Phi B}<T_{\Phi C}$	Comparison of Phase B to other two phases to determine relative temperature difference	Phase B typically hotter than A & C. If not, this could suggest overheating in either A or C phase
$T_{\Phi A}(t_2)>T_{\Phi A}(t_1)$ $T_{\Phi B}(t_2)>T_{\Phi B}(t_1)$ $T_{\Phi C}(t_2)>T_{\Phi C}(t_1)$	Look for temperature trends at every location to catch events to determine trending	Many possible causes
$\sigma(T_{\Phi A,Line})$ - $\sigma(T_{\Phi A,Load})$	Comparison of Standard Deviations between the Line and Load sensors on a phase	A relative increase in standard deviation at a specific location may indicate failure modes indicative of sporadic failure processes – excessive vibration for example

D. Field Results From Fiber Installation

The viability of continuous thermal monitoring in industrial environments is going to depend on the ability of the respective technologies to perform reliably and be installed robustly. In this respect the IR imaging technology is fairly conservative, as no sensors require installation, but the consequence is that data is only available a snapshot at a time. The optical fiber-based sensors referred to throughout this paper, has proven exceptional in its installation robustness.

The data collected for this paper is gathered from multiple installations of fiber sensors, with much coming from a green-field expansion at a large petrochemical processing plant. That installation comprises sensors mounted in four 15 kV enclosures, on both tie and feeder compartments. Sensors have shown excellent longevity during the 18 months since commissioning. In addition, no fibers to date from any project have required replacing or been damaged during initial installation.

V. CONCLUSION

The importance of thermal monitoring is undisputable, particularly in critical processes where avoiding unscheduled downtime due to equipment failure is paramount. With the acceptance of this fact, one must determine the efficacy, safety, and accuracy of the de-facto standard in thermal monitoring – infrared imaging. Although a very useful tool for many applications, there are modest detractions to this technology in general, and specifically for applications in enclosed electrical equipment, such as medium voltage switchgear.

Moving towards continual thermal monitoring provides a method for attaining additional data which has substantial value. It has been demonstrated that using fiber optics sensors for gather this data can provide access to otherwise inaccessible locations. Regarding switchgear in particular, it is recommended to monitor each of the three phases at the following pressure connections:

- Cable landing pads (if present)
- Primary disconnecting device to main bus
- Primary disconnecting device to load bus

Data from the six disconnecting device sensors can be used effectively to produce information that will generate events when conditions become abnormal. With more research these events can begin to form the database that will allow proper condition-based monitoring of the breaker and portions of the cell.

Although IR scanning will continue to form the basis for most thermal diagnostics in preventative maintenance regimes, one can infer that continuous thermal monitoring will impart substantial benefits in many situations.

VI. ACKNOWLEDGMENTS

Special thanks to Al Pilcher, Dennis Thonsgard, Michael Wactor, Ted Burse and Jay Yelvington for their contributions to this paper.

VII. REFERENCES

[1] NFPA 70B, 2010, Recommended Practice for Electrical Equipment Maintenance, Quincy, MA.

[2] NFPA 70E, 2012, Standard for Electrical Safety in the Workplace, Quincy, MA.

[3] A. Livshitz, B. Chudnovsky, B, Bukengolts, B. Chudnovsky. “On-Line Temperature Monitoring of Power Distribution Equipment”, *Petroleum and Chemical Industry Conference*, 2005, p.223-231

[4] A. Livshitz, B. Chudnovsky, “Condition Diagnostics of Energized Electrical Equipment: Case Studies”, *Power Engineering Society General Meeting*, 2006, p.223-231

[5] C. Szafron. “Application of Thermal Imaging in Electrical Equipment Examination”, Mar 2008, [Online]. Available: zet10.ipee.pwr.wroc.pl/record/181/files/39.pdf

[6] B.Griffith, F. Beck, D. Arasteh, D. Turler. “Issues Associated with the Use of Infrared Thermography for Experimental Testing of Insulated Systems”, *Thermal Performance of the Exterior Envelopes of Buildings Conference*, ClearWater Beach, Florida, 2009

[7] P. Mask. “Infrared Scanning of Furnaces”, 2009, [Online]. Available: http://support.flir.com/Answers/A567T/A567-US%20Tech%20Pub%2052%20Furnace.pdf

[8] D. Loucks. “A Step Closer to Maintenance Free Gear”, *Petroleum and Chemical Industry Conference*, 2010, p.1-8

[9] R. Mendler, G. Osborne, T. Thevenet, M. Janak, M. Janak. “Electrical Equipment Maintenance 101”, IEEE Paper No. PCIC-2011-06.

VIII. VITA

Shelly DeGrate is a Sales and Product Manager at Powell Industries Inc., in Houston, Texas. Shelly’s focus is on automation design solutions within electrical substation environments. She is an IEEE Member and co-authored a PCIC paper presented in 2010 entitled “Increasing Electrical Safety by Reducing the Risks of Arc Flash Hazards.” She began her career in the process and automation industry in 1992, performing design/build systems for the water and wastewater industry. Following, she was a sole-proprietor for 14 years providing turn-key energy conservation studies for the State Energy Conservation Office in Austin, Texas. Shelly received a BSEE from the University of Houston in 1992.

James Payne is an electrical engineer at the Valero Port Arthur Refinery. His focus is on distribution and relay protection. James began his career as an electrical engineer at Dow Chemical in 1999. He joined Eaton Electrical in switchgear sales in 2000. He earned his BSEE from New Mexico State University in 1998.

Roy Belak is Manager of Advanced Product Development for Powell Canada Inc., based in Vancouver, Canada. Roy focuses on the development and integration of various technologies for diagnostics of electrical equipment with particular focus on switchgear. Roy has been involved in the development of products and technologies for a number of wide ranging industries including petrochemical, analytical instrumentation, biosciences, and industrial quality control. Roy holds a Bachelor of Applied Science in Engineering Physics from the University of British Columbia.