Implementation and Field Experience of Redundant 100% Generator Stator Ground Fault Protection

Mital Kanabar, Barry Xu, Mike Ramlachan – GE Grid Solutions

Nam Pham, Micheal Perez – Florida Power & Light

Abstract

Generators are expensive and important components of the power system. It is important to avoid or minimize the damage of the generator in case of stator ground faults. Traditionally, 100% stator ground fault protection on high impedance grounded generators is accomplished using the 59G and 27TN functions. The 59G function provides 95% coverage and the 27TN function provides an overlapping 15% coverage. Unfortunately, the 3rd harmonic generation from a synchronous machine may be very low value and the generator must be run at different power outputs to determine the lowest 3rd harmonic operating range to determine the optimal protection settings.

However, 100% stator ground fault protection based on sub-harmonic injection is very sensitive and can be easily applied to high impedance grounded generators. This paper reviews the implementation of redundant 100% generator stator ground fault protective scheme using single 20Hz sub-harmonic injection equipment and vendor A & B protective relays. The paper will review the lab testing, redundant scheme design, and in-service results including any lessons learned.

1. Introduction

Traditional 100% stator ground fault protection using the sub-harmonic or low frequency (20 Hz) injection method involves using a single injection module paired with a corresponding relay. Failure of the relay results in loss of 100% ground fault protection, single point of failure. Florida Power and Light wanted to investigate the possibility and feasibility of introducing a second relay to the system and hence increasing the reliability of the system, reducing the single point of relay failure. This paper outlines the results of testing the operation of a sub-harmonic injection module paired with relays from two (2) different relay manufacturers. The results are analyzed to determine the viability of using this system reliably and securely.

2. Stator Ground Fault Protection

Although low voltage generators are usually solidly Grounded. For larger generators, it is desirable to maintain high availability of the generator thus it is common for High Voltage generators to be grounded via an impedance to limit the damage that can be caused by ground faults. This impedance is chosen to limit the ground fault current to full load current or less.

Instantaneous (50G) and inverse time (51G) ground fault overcurrent elements can be used to protect for stator ground faults where the current source is from a CT installed into the generator neutral path. Alternately, the element may be supplied from a CT on the secondary of a distribution transformer grounded system. There is however a limit on the percentage of the stator winding that can be protected by this method. For stator ground faults near the neutral, the fault current can be severely limited due to the grounding impedance and hence generally it can only provide up to approximately a maximum of 95% of the stator winding. It might also be required to provide coordination for system faults. Hence the sensitively and speed of this method can be limited.

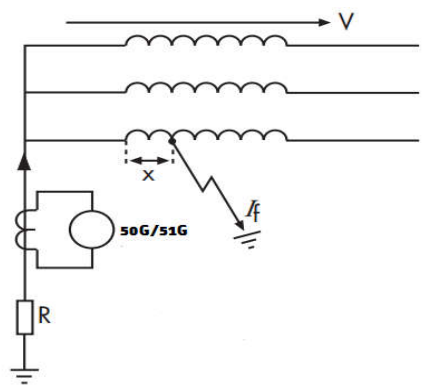

Figure 1 – Ground Overcurrent (50G/51G)

A residual overvoltage (59N) can also be used to detect stator ground faults. The voltage source for this element can be a broken delta connection or from a three-phase voltage input (zero sequence voltage is calculated by the relay) at the generator

terminals. For generators that are impedance grounded, this voltage can be measured directly in the ground path via a single-phase VT. However, like the 50G/51G method the voltage displacement can be insignificant for faults close the generator neutral. Hence this method also suffers from sensitively and speed limitations and can only reliably protection up to a maximum of 95% of the stator winding.

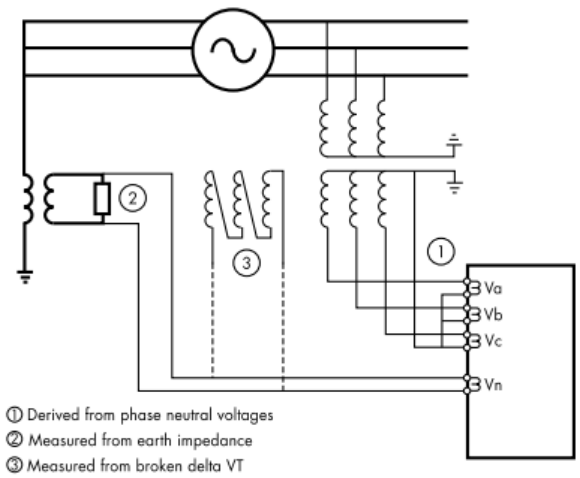

Figure 2 – Residual Overvoltage (59N)

Ground faults in the final 5% of the winding cannot be detected reliably by the above methods and for most applications, especially for small generators, this limitation is acceptable due to the low probability of a fault occurring in that region of the winding. However, for large generators 100% stator ground fault protection is commonly specified to cover all winding ground faults to maintain high availability of the generator, limitation of damage caused by ground faults. Faults close to the star point followed by a second fault can cause the impedance ground to be bypassed, causing large fault currents and significant damage to the generator. These faults can also be the consequence of mechanical damage such as creepage of conductors and loosening of bolts.

Most generators will produce some minimum third harmonic voltage under normal operating conditions. Third harmonic under and over voltage elements can therefore be used to provide overlapping coverage for faults in the remaining 5% of the generator winding. The 3rd harmonic under voltage element (27TN) is used when the neutral voltage measurement is available at the neutral of the generator. A 3rd harmonic over voltage (59TN) element can be used where the source voltage is taken from the generator terminals. There are limitations to both these methods, some generators do not develop significant 3rd harmonic or only develop 3rd harmonic when loaded. Supervision is thus needed to determine the status of the generator and voltage source to be able block/unblock the element. It also goes not discriminate the location of the fault, such as when multiple generators are connected to the same bus. It can also be challenging to set this element and might involve taking 3rd harmonic readings of the generator at various loads and voltages. This element if set reliably can protect up to 20-30% of the stator winding and when combined with the previously discussed 50G/51G and 59N methods, hence 100% stator ground fault can be achieved notwithstanding the limitations previously discussed.

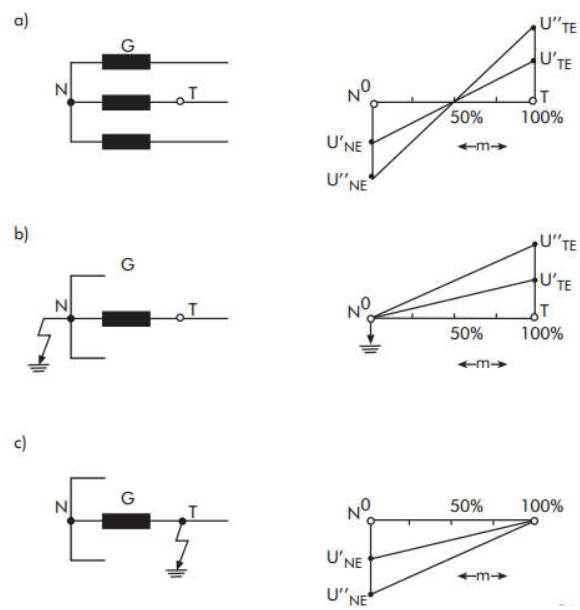

Figure 3 – 3rd Harmonic Distribution along Stator Winding, (a) Normal (b) Fault at Star point (c) Fault at Terminals

The sub-harmonic injection method is provided by injecting an external low frequency (usually 20 Hz) alternating voltage into the star point or the terminals of the machine. Under normal healthy conditions only very small currents flow via the stator ground capacitance due to the high impedance of this path to low frequencies (Xc =

1/(2*π*f*C)). The measured current increases during a ground fault due to the low impedance of the ground fault path. From the injected voltage and measured fault current the relay can determine the fault resistance/impedance. A loading device with a low frequency generator is required for this implementation. This method can detect ground faults in the entire winding, including the generator neutral point and generator terminals (including connected components such as voltage transformers). This method is advantageous compared to the previously discussed schemes because it does not depend much on changing system conditions and thus does not rely on sensitivity to system current and voltage magnitudes. It does not need to coordinate with external system conditions and thus can be set reliably and securely providing 100% protection of the windings. This element must be blocked when the generator is operating close to its injection frequency of 20 Hz however, such as during startup or for variable frequency machines.

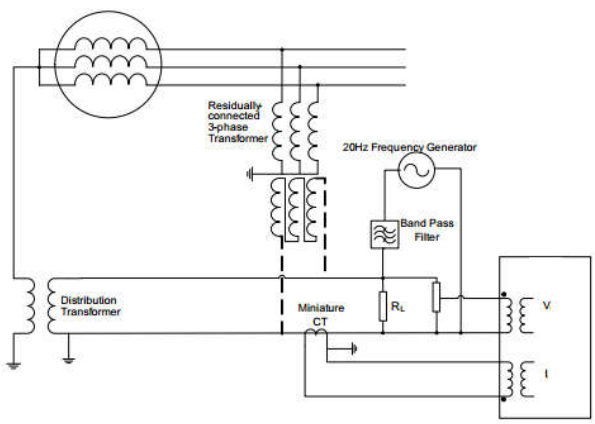

Figure 4 – 100% Stator Ground Fault with Sub-Harmonic Injection

3. Test Introduction

This following outlines the results of testing the operation of sub-harmonic (20 Hz) injection based 100% stator ground protection using a relay from manufacturer A (hereby referred to as Relay A) and one from manufacturer B (hereby referred to as Relay B) . The relays were configured to share a common 20 Hz Injection Module and coupling filter, the system chosen is used in FP&Ls standard generator protection application. The test setup used for this analysis is illustrated in Figure 5. The injection/coupling system was connected to a ground fault resistance (Rg) and total capacitance from stator to ground (Cg). Relay A and B were connected in series to measure the 20 Hz signal current. The injected 20 Hz voltage is wired to the relays in parallel. A variable ground fault resistance (Rg) (from 10 Ohm to 10 k Ohm) was used to simulate the various conditions of a generator stator ground fault, at variable stator-ground total capacitance (Cg) (from 0.01 uF to 1.1 uF). Please note that only a 20 Hz signal was used in the test setup – as the sub-harmonic (20 Hz) injection based 100% stator ground protection only measures 20 Hz signals.

Note that the 20 Hz signal current was injected into the Sensitive Ground CT Terminals on Relay A.

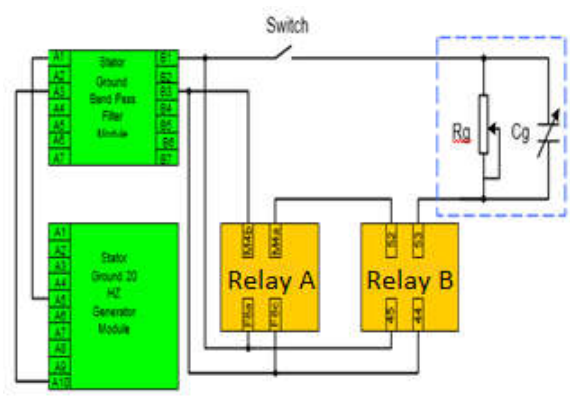

Figure 5 – Test Setup

4. Performance Testing of the Relay System

The following tests scenarios were investigated:

1) 20 Hz injected signal metering.

2) Sub-harmonic (20 Hz) injection based 100% stator ground protection operation.

3) Sensitivity of injected signal metering values over various frequencies

4) Blocking Functions.

4.1 20 Hz Injected Signal Metering

First, the metered values of the injected 20 Hz voltage and current were measured on both relays. Relay A measured the 20 Hz injected voltage and current, the injection current angle and calculates the stator ground resistance. The measured 20 Hz

injected current has a 3rd decimal resolution, therefore, the displayed resolution is 1 mA. Relay B measured the 20 Hz injected voltage and current together with the resistive component in terms of the current.

The measured 20 Hz signal values from Relay A were read using its configuration software, see figure 6.

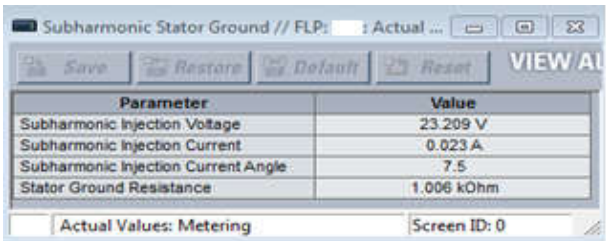

Figure 6 - Sub-Harmonic values (Relay A)

Similarly the measured 20 Hz signal values were read from Relay B, see figure 7.

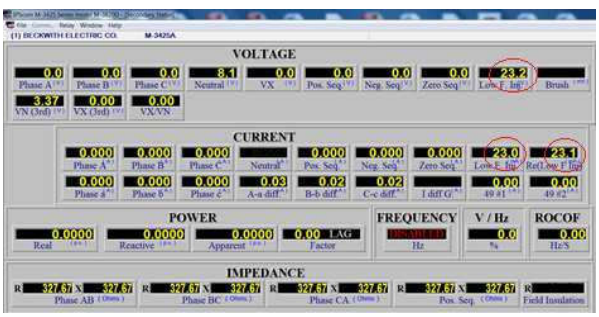

Figure 7 - Sub-Harmonic Values (Relay B)

The sub-harmonic injection values were observed in both relays for various ground fault resistance values by varying the ground capacitance (Tables 1 to 3).

Applied System Parameter		Relay A				Relay B		
Capacitance (uF)	Resistance (ohm)	Voltage (V)	Current (mA)	Current Angle (degree)	Stator Ground Resistance	Voltage (V)	Total Current (mA)	Real Current (mA)
1.1	400	22.9	57	2.8	403	22.9	57.8	57.0
1.1	600	23.1	38	4.4	604	23.1	38.1	38.0
1.1	800	23.1	29	6.0	805	23.2	29.1	28.9
1.1	1000	23.2	23	7.6	1005	23.2	23.2	23.0
1.1	1500	23.3	16	11.3	1503	23.3	15.6	15.3
1.1	2000	23.3	12	15.1	2000	23.4	12.1	11.8
1.1	2500	23.4	10	18.7	2502	23.4	9.6	9.3
1.1	4000	23.5	7	28.3	3961	23.5	6.9	6.1
1.1	6000	23.5	5	38.8	5905	23.5	4.8	3.9
1.1	8000	23.5	4	46.6	7791	23.5	4.1	2.8
1.1	10000	23.6	4	52.8	9723	23.6	3.5	1.9

Table 1: Metering with Capacitance of 1.1 uF

Applied System Parameter		Relay A				Relay B		
Capacitance (uF)	Resistance (ohm)	Voltage (V)	Current (mA)	Current Angle (degree)	Stator Ground Resistance (ohm)	Voltage (V)	Total Current (mA)	Real Current (mA)
0.5	400	22.9	57	1.0	403	22.9	56.4	56.3
0.5	600	23.1	38	1.8	604	23.1	38.2	38.2
0.5	800	23.2	29	2.5	805	23.2	28.6	28.4
0.5	1000	23.2	23	3.2	1005	23.2	23.3	23.3
0.5	1500	23.3	16	5.0	1505	23.3	15.3	15.1
0.5	2000	23.3	12	6.6	1993	23.4	12.1	11.9
0.5	2500	23.4	9	8.3	2492	23.4	9.4	9.2
0.5	4000	23.4	6	13.5	3992	23.4	6.0	5.9
0.5	6000	23.4	4	19.3	5884	23.5	4.2	3.9
0.5	8000	23.5	3	24.1	7814	23.5	3.5	3.1
0.5	10000	23.5	3	29.9	9690	23.5	3.0	2.5

Table 2: Metering with Capacitance of 0.5 uF

Applied System Parameter		Relay A				Relay B		
Capacitance (uF)	Resistance (ohm)	Voltage (V)	Current (mA)	Current Angle (degree)	Stator Ground Resistance	Voltage (V)	Total Current (mA)	Real Current (mA)
0.15	400	22.9	57	0.0	403	22.9	56.8	56.7
0.15	600	23.1	38	0.2	604	23.1	38.4	38.1
0.15	800	23.2	29	0.5	805	23.2	28.7	28.5
0.15	1000	23.2	23	0.7	1005	23.2	23.1	23.0
0.15	1500	23.3	16	1.3	1505	23.3	15.4	15.4
0.15	2000	23.3	12	1.5	1998	23.4	11.9	11.6
0.15	2500	23.4	9	2.0	2487	23.4	9.1	9.0
0.15	4000	23.4	6	3.7	3974	23.4	6.2	6.2
0.15	6000	23.4	4	4.0	5867	23.5	3.8	3.8
0.15	8000	23.4	3	5.4	7562	23.5	3.3	3.1
0.15	10000	23.5	2	7.9	9863	23.5	2.3	2.1

Table 3: Metering with Capacitance of 0.15 uF

As seen from the above metering values, the 20 Hz signal voltage and current values read by both relays are the same. Note that the Relay B measures real (resistive) current, whereas, the Relay A calculates the resistance from the measured 20 Hz injected voltage and current.

4.2 Protection Element Operation

Relay A provides two comparators: Gnd OC – ground overcurrent and lower-ground resistance, whereas, Relay B provides a Gnd OC. For the protection element operation testing only Gnd OC was used. The typical Ground OC Element settings from both Relays used for these tests were:

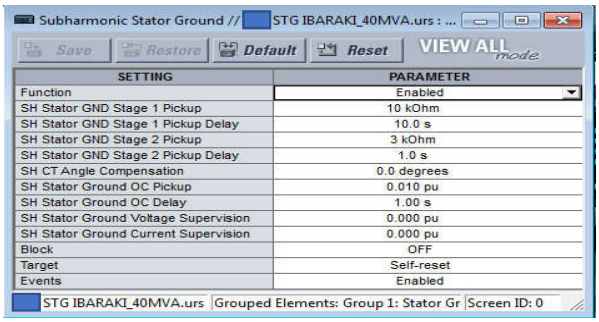

Figure 8 – Settings of Subharmonic Stator Ground Element of Relay A

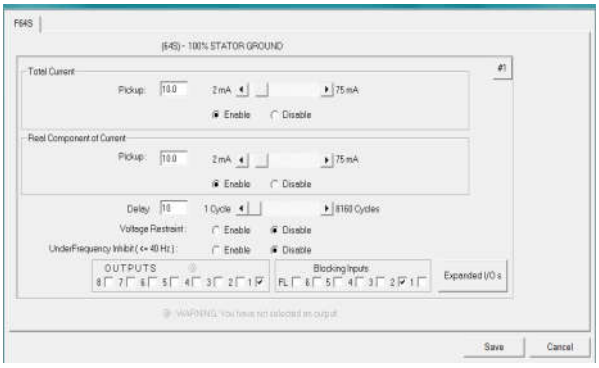

Figure 9 - Settings of 100% Stator Ground (64S) Element of Relay B

Applied System Parameter		Relay A			Relay B		
Capacitance (uF)	Resistance (ohm)	Metered / Displayed Current (mA)	Metered / Displayed Current Angle (degree)	Sub-Harmonic Stator Ground protection Operation	Metered / Displayed Total Current (mA)	Metered / Displayed Real Current (mA)	100% Stator Ground (64S) protection Operation
0.15	2450	10	2.0	No	9.7	9.7	No
0.15	2400	10	2.0	No	9.7	9.6	No
0.15	2350	10	1.8	Yes	10.3	10.3	Chattering
0.15	2320	10	1.8	Yes	10.5	10.3	Chattering
0.15	2300	10	1.9	Yes	9.9	10.0	Chattering
0.15	2280	10	1.9	Yes	10.2	10.5	Chattering
0.15	2260	10	1.8	Yes	10.4	10.3	Chattering
0.15	2240	10	2.1	Yes	10.7	10.5	Yes
0.15	2200	11	1.9	Yes	10.4	10.4	Yes

Table 4: Protection Element set at 10 mA

It can be observed from the above table that both devices operated at appropriately just above the pickup value. The metering display of the 20 Hz injected current in Relay A has a 3rd decimal resolution, therefore, the displayed resolution is in steps of 1 mA. For the first two conditions, where the actual current was 9.7 mA, Relay A displayed a rounded value of 10 mA. Although, the displayed actual value was rounded to 10 mA, Relay A Gnd OC element utilizes a high-resolution value, therefore, for first two test cases, Relay A did not operate as the element utilized the 9.7 mA value.

For Relay B, the chattering condition was observed around the boundary condition – pickup was 10 mA, and the element operated and then drop-off several times near 10.3 - 10.5 mA.

Applied System Parameter		Relay A			Relay B		
Capacitance (uF)	Resistance (ohm)	Metered / Displayed Current (mA)	Metered / Displayed Current Angle (degree)	Subharmonic Stator Ground Operation	Metered / Displayed Total Current (mA)	Metered / Displayed Real Current (mA)	100% Stator Ground (64S) Operation
0.15	1200	19	1.0	No	19.6	19.2	No
0.15	1190	19	1.0	Yes	19.3	19.1	No
0.15	1180	20	1.0	Yes	19.6	19.6	Chattering
0.15	1170	20	0.9	Yes	20.0	19.8	Chattering
0.15	1160	20	0.9	Yes	19.9	19.8	Chattering
0.15	1150	20	0.9	Yes	20.0	20.0	Chattering
0.15	1140	20	0.8	Yes	20.1	20.1	Chattering
0.15	1130	20	0.8	Yes	20.3	20.4	Yes
0.15	1120	21	0.8	Yes	20.9	20.8	Yes
0.15	1100	21	0.7	Yes	20.8	21.0	Yes
0.15	1000	23	0.7	Yes	23.2	23.2	Yes

Table 5: Protection Element set at 20 mA

Applied System Parameter		Relay A			Relay B		
Capacitance (uF)	Resistance (ohm)	Metered / Displayed Current (mA)	Metered / Displayed Current Angle (degree)	Subharmonic Stator Ground Operation	Metered / Displayed Total Current (mA)	Metered / Displayed Real Current (mA)	100% Stator Ground (64S) Operation
0.15	700	33	0.4	No	32.6	32.6	No
0.15	600	38	0.2	No	38.1	38.1	No
0.15	580	39	0.2	No	39.3	39.3	No
0.15	570	40	0.2	Yes	40.2	40.1	Chattering
0.15	560	41	0.2	Yes	40.9	40.8	Yes
0.15	550	42	0.2	Yes	41.9	41.7	Yes
0.15	500	46	0.2	Yes	45.5	45.3	Yes

Table 6: Protection Element set at 40 mA

Based on the above Protection Element testing results, Relay Bs 100% Stator Ground protection (64S) can operate with Relay A sharing the same sub-harmonic injection module

Because of the resolution difference between the two relays, Relay B may experience chattering (operate / drop- off several of times) when the injected current is close to the Pickup setting border.

4.2.1 Protection Element Operation Timing

Following screen captures reflect the operation of Sub-Harmonic Stator Ground Elements as captured by the Oscillography Records of Relay A with Pickup at 40 mA and with a delay of 0.167 seconds.

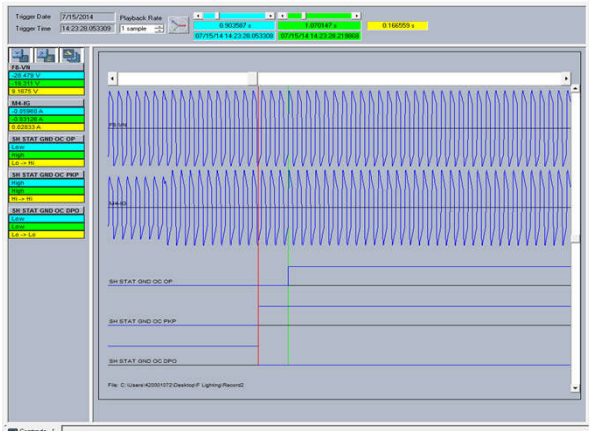

Figure 10 - Oscillography Record Relay A

Testing		Relay A		Relay B	
Pre Fault (mA)	Fault (mA)	Delay Setting (s)	Operation Time (s)	Delay Setting (cycle)	Operation Time (s)
0	1000	0.1	0.417	6	0.1044
0	1000	0.1	0.337	6	0.0935
0	1000	1.0	1.282	60	1.0056
0	1000	1.0	1.362	60	1.0025
0	1000	10.0	10.284	600	10.0013
0	1000	10.0	10.602	600	10.0049

Table 7: Operation Time with Pickup set at 10 mA

Above table shows time of operation for both relays with corresponding delay settings for 10 mA pickups. Relay A specifications define the time to operate of this element as approximately 600 ms, as it implements effective filters to filter out frequencies other than 20 Hz from the measured voltage and current. It also calculates the Stator ground fault resistance from the injected signal. Therefore, the time of operation of Relay A was seen to be 0.3 to 0.6 seconds more than delay setting value. Its ability to protect at lower frequencies (during generator start-up) is achieved with effective filtering, which add some extra delays (instruction manual specifies operation delay to be 0.6 to 1.2 s). To achieve the same time of operation from both relays, delay setting for Relay A should consider this additional operating time specification.

Normally, time of operation of 64S is not required to be very fast, the typical time of operation is around 1 – 10 seconds. In addition, this inherent delay of 0.3 to 0.6 s can be compensated into delay setting (if necessary), i.e. to achieve 1 s time of operation, the delay can be set to 0.6 s instead of 1 s.

The frequency sensitivity test is performed (as shown below) to demonstrate this effective filtering concept.

4.3 Sensitivity and Blocking at Various System Frequencies

This protection element is based on a 20 Hz signal and therefore the measured injected voltage and current values should be at 20 Hz. However, during start-up, the generator ramps-up and so does the power system frequency. Therefore, the metering of injected voltage and current is conducted at various frequencies. Since the relay applies filters to only measure the 20 Hz components for this element, a test was performed to check the sensitivity of injected value metering at various frequencies as shown in Table 8. During this testing, an injection test set was used instead of the injection system. The voltage was held at 23.2 V and the current at 40 mA, as the injected frequency was varied.

Applied Frequency	Relay A			Relay B		
Hz	Voltage (V)	Current (mA)	Stator Ground Resistance (ohm)	Voltage (V)	Total Current (mA)	Real Current (mA)
20	23.1	40	572	23.1	40.4	40.3
10	0	1	500,000	19.9	49.3	38.8
15	0	0	500,000	23.4	60.3	56.1
25	0	0	500,000	21.9	21.1	20.8
30	0	0	500,000	12	7.3	7.1
40	0	0	500,000	0.0	0.2	0.0
50	0	0	500,000	3.0	0.0	0.0
60	0	0	500,000	0.0	0.0	0.0

Table 8: Metering at Various Frequencies

As it can be observed from the above table, the metered value of the 20 Hz voltage and current

should be zero (filtered out) when the generator/system frequency is ramping up during starting. According to Relay As instruction manual, this element is blocked between 15 to 25 Hz system frequencies for security purposes (automatically, no need for any settings). Relay B still measures some finite values when the system frequency signal is near 20 Hz. There is a setting in Relay B to block this element below 40 Hz. We recommend that this blocking below 40 Hz should be enabled to any potential operational issues with this element during the starting of the machine.

4.4 Protection Element External Blocking

Both Relays sub-harmonic generator stator ground protection have been designed with a blocking input, so that it can be blocked under abnormal conditions such as an equipment critical failure created in the injection system. During this testing, a contact input was configured to block the protection function. It was confirmed that the protection operation was blocked during the pickup of the contact input and the blocking was reset when the contact input was asserted.

5 Conclusion

The 20 Hz injected signal was measured in both relays and measurements (of injected voltage and current) were found to be very close. Relay A calculates stator ground fault resistance whereas Relay B measures the resistive component of the injected current.

The protection function in both relays operates properly during the simulated fault conditions – the chattering seen in Relay B was only observed for some boundary conditions.

To eliminate the effect of the stator ground capacitance, Relay B measures Real or resistive current, whereas the Relay A calculates stator ground fault resistance.

Relay As 64S protection includes two functions: 1) under resistance; and/or 2) Ground Over current; Relay Bs 64S is based on Total and Resistive Ground over current. While setting up the 64S element, the under-resistance function is easy to apply, as it is not required to measure this current during commissioning. The resistive pickup can be set between 1 kohm to 10 kohm for any site. However, to apply ground over current 64S, it is important to measure ground current at the site to establish a baseline value, and then apply an appropriate over current pickup setting.

Operation time for Relay A is longer, the instruction manual specifies around 0.6 - 1.2 seconds while 0.3 to 0.6 seconds was observed during testing. This can be attributed to the band-pass filtering algorithms. This is intended to facilitate: 1) stable operation even during boundary conditions – no chattering; and 2) no sensitivity to out-of-band frequencies.

Metering values were also measured at various frequencies. The filtering algorithm in Relay A filters out all out-of-band frequency components automatically. Relay B was seen to be sensitive to other frequency components below 40 Hz. Therefore, it is recommended to enable the frequency blocking function provided in Relay B.

Both relays have external contact inputs to block protection elements in case of critical failure in the injection module.

The tests prove that the operation of the two (2) relays connected to a single 20 Hz injection system is functionally correct. Subsequent field testing/implementation has not produced any unknown/undesired results.

Although the reliability/availability of the system is increased when pairing the injection system with both relay, the injection set is still a single point of failure. The feasibility of using a totally redundant system could be further investigated using parallel tripping systems.

References:

Manuals for Relay A, Relay B and Injection Set.