2016 Record Flooding in the Entergy System

Hartburg and Kentwood Substations

Darryl Champagne, Jr., PE, PMP
Daniel Alban
Michael Walcott
Ricky Daniels, Jr

Texas A&M University
Conference for Protective Relay Engineers
College Station, TX
April 2017

Hartburg Sub

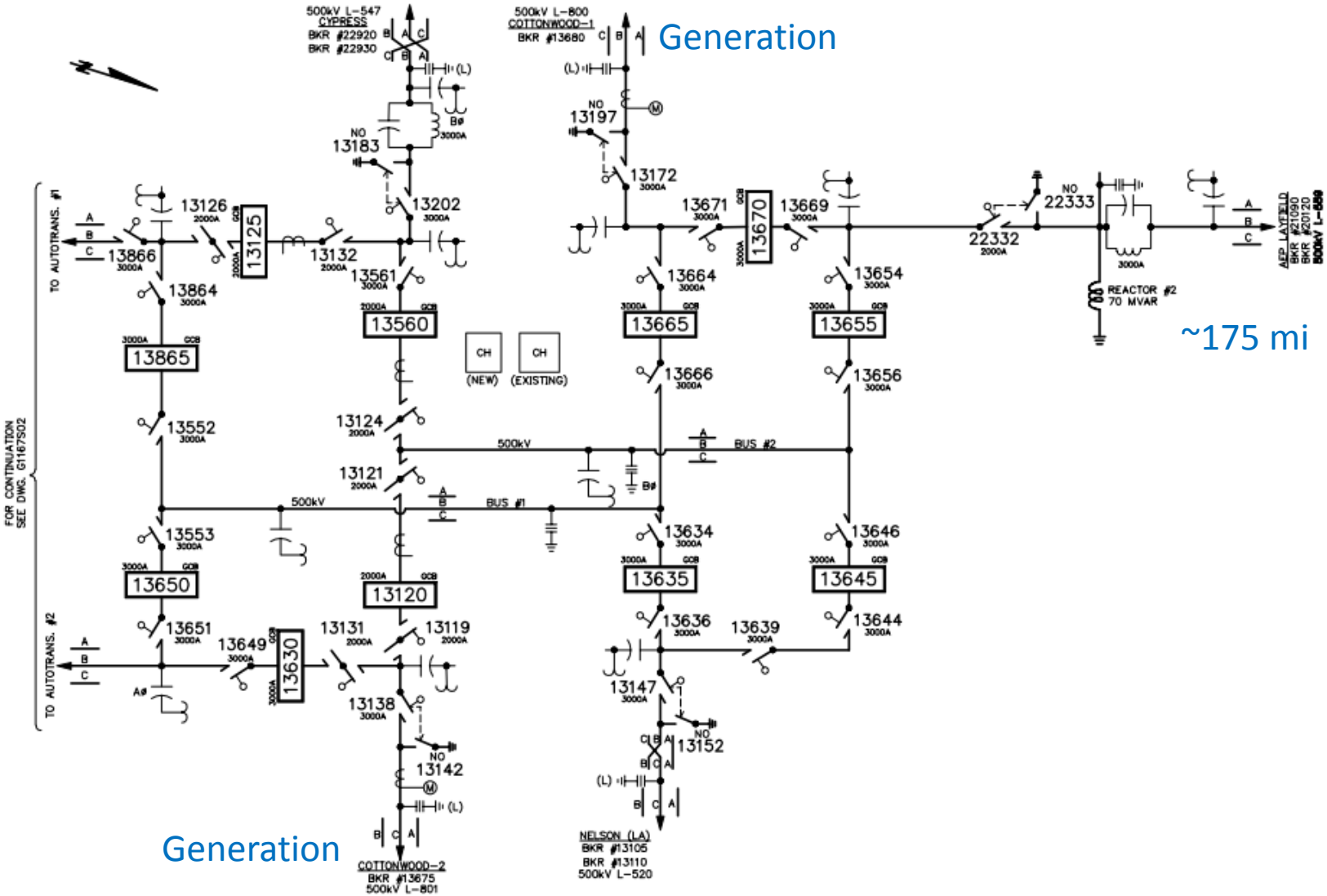

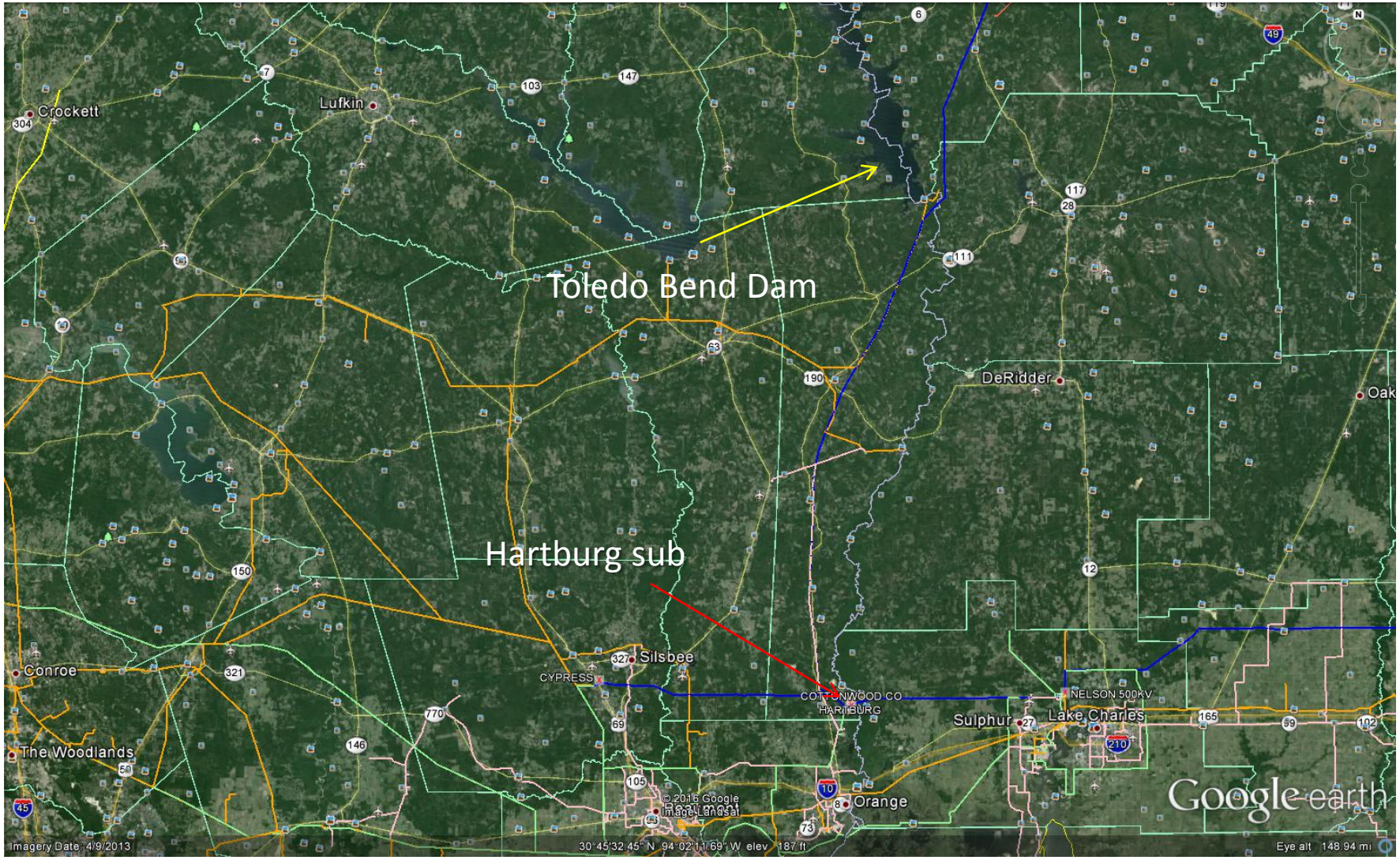
Toledo Bend Dam
Hartburg sub
Crockett
Lufkin
DeRidder
Silsbee
CYPRESS
COTTONWOOD CO
HARTBURG
NELSON 500KV
Sulphur
Lake Charles
Orange
Conroe
The Woodlands
© 2016 Google
Image Landsat
Google earth
Imagery Date: 4/9/2013
30°45'32.45" N 94°02'11.69" W elev 187 ft
Eye alt 148.94 mi

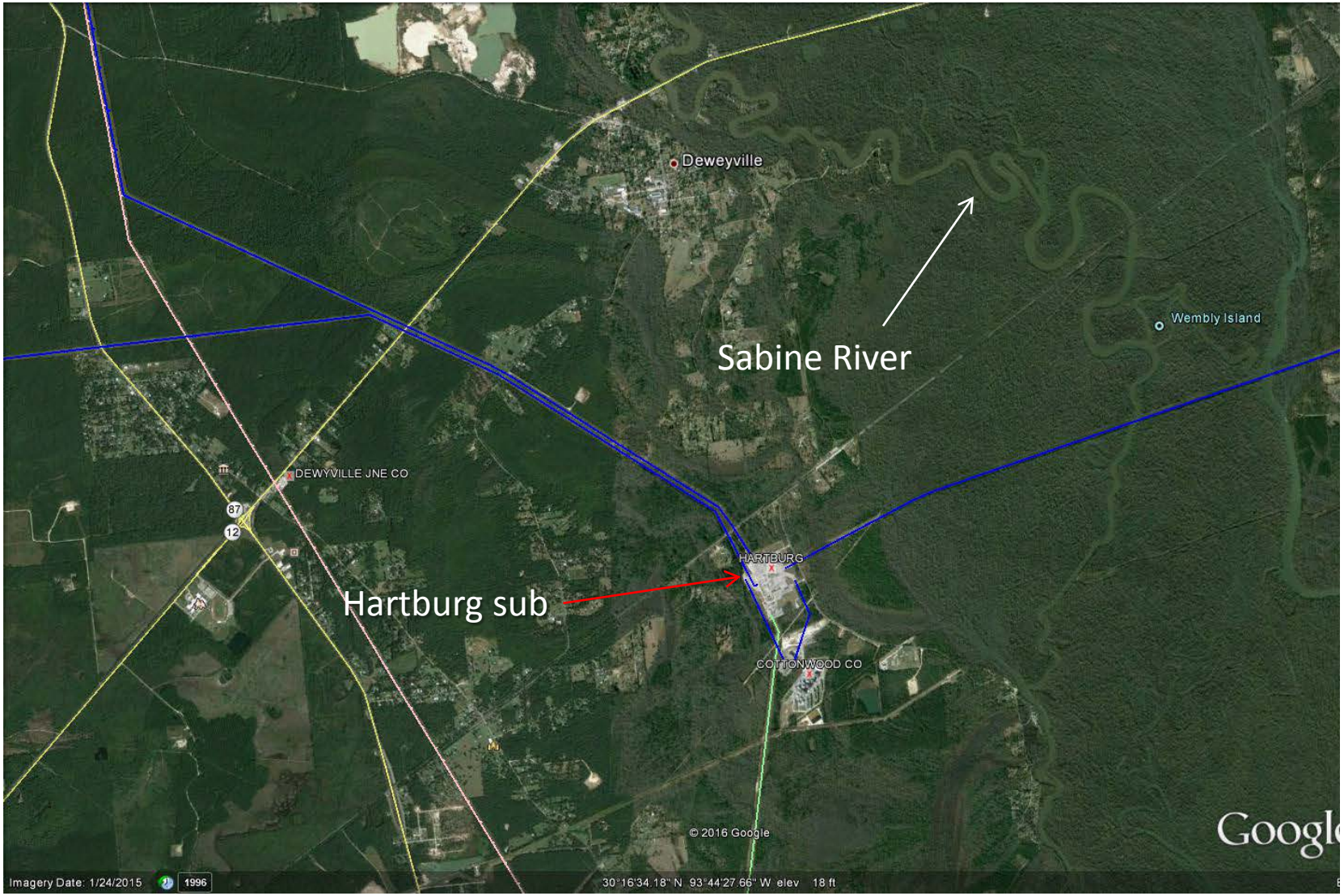
Deweyville
Sabine River
Wembly Island
DEWYVILLE JNE CO
87
12
HARTBURG
Hartburg sub
COTTONWOOD CO
© 2016 Google
Google
Imagery Date: 1/24/2015
1996
30°16'34.18" N 93°44'27.66" W elev 18 ft

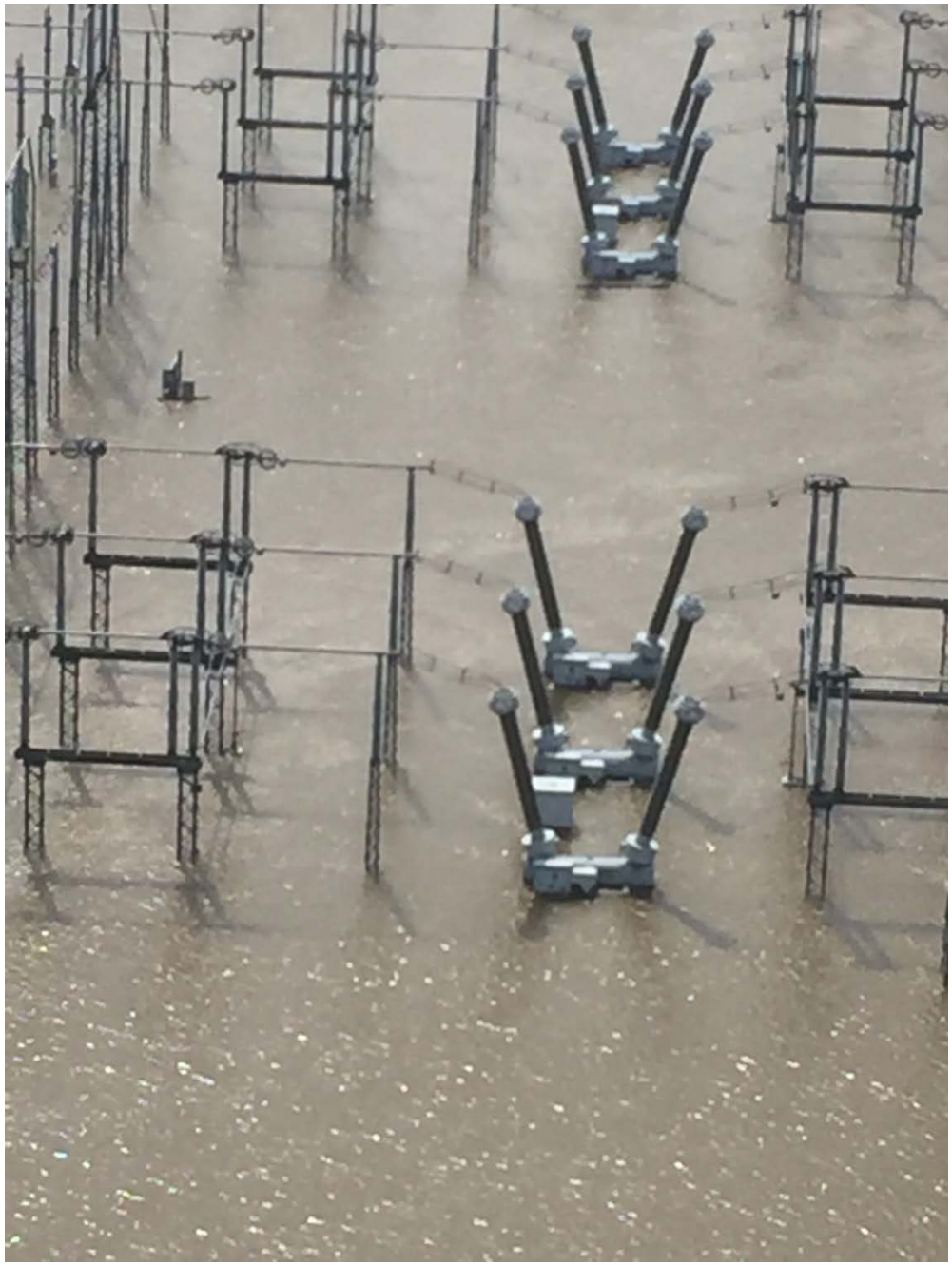

Timeline

- March 8 – 9, 2016:
  - 18-21” of rain in northern Louisiana
  - More than a foot of rain over the southern part of the Toledo Bend Reservoir
- Wednesday, March 9
  - All (11) flood gates at Toledo Bend opened
- Tuesday, March 15
  - Sabine River reaches record crest near Deweyville of 33.24ft. 1884 → 32.20 ft

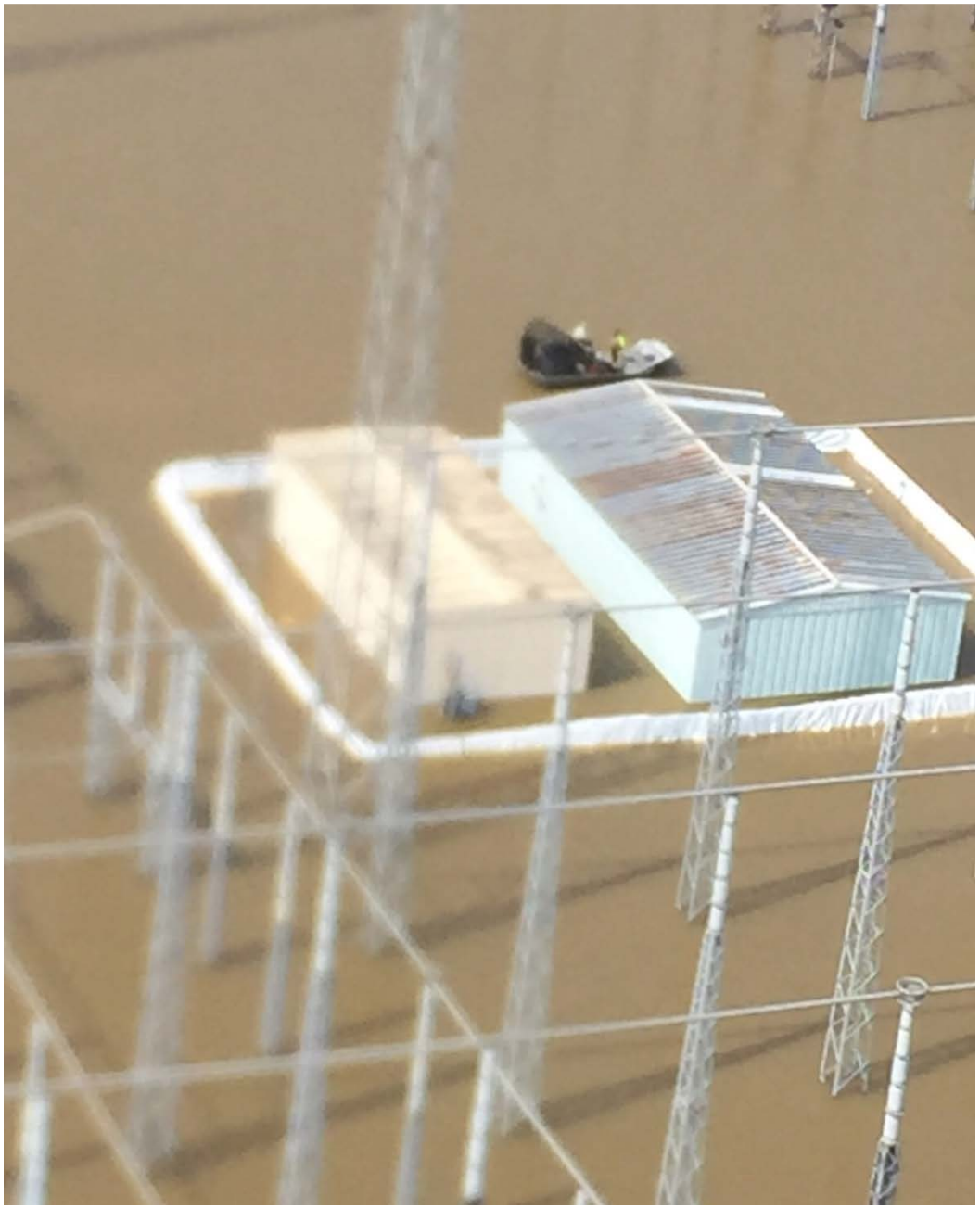

- Approximately 4 ½ ft of water
- Berm and water pumps around control buildings
- 1 inch of water in control houses
  - No damage
- Motor mechanisms for switches all (28) under water

An inch of water or less got into the 2 existing control houses.

All of the 500kv dead tank breakers had their control cabinets go under water anywhere from 8 -12”

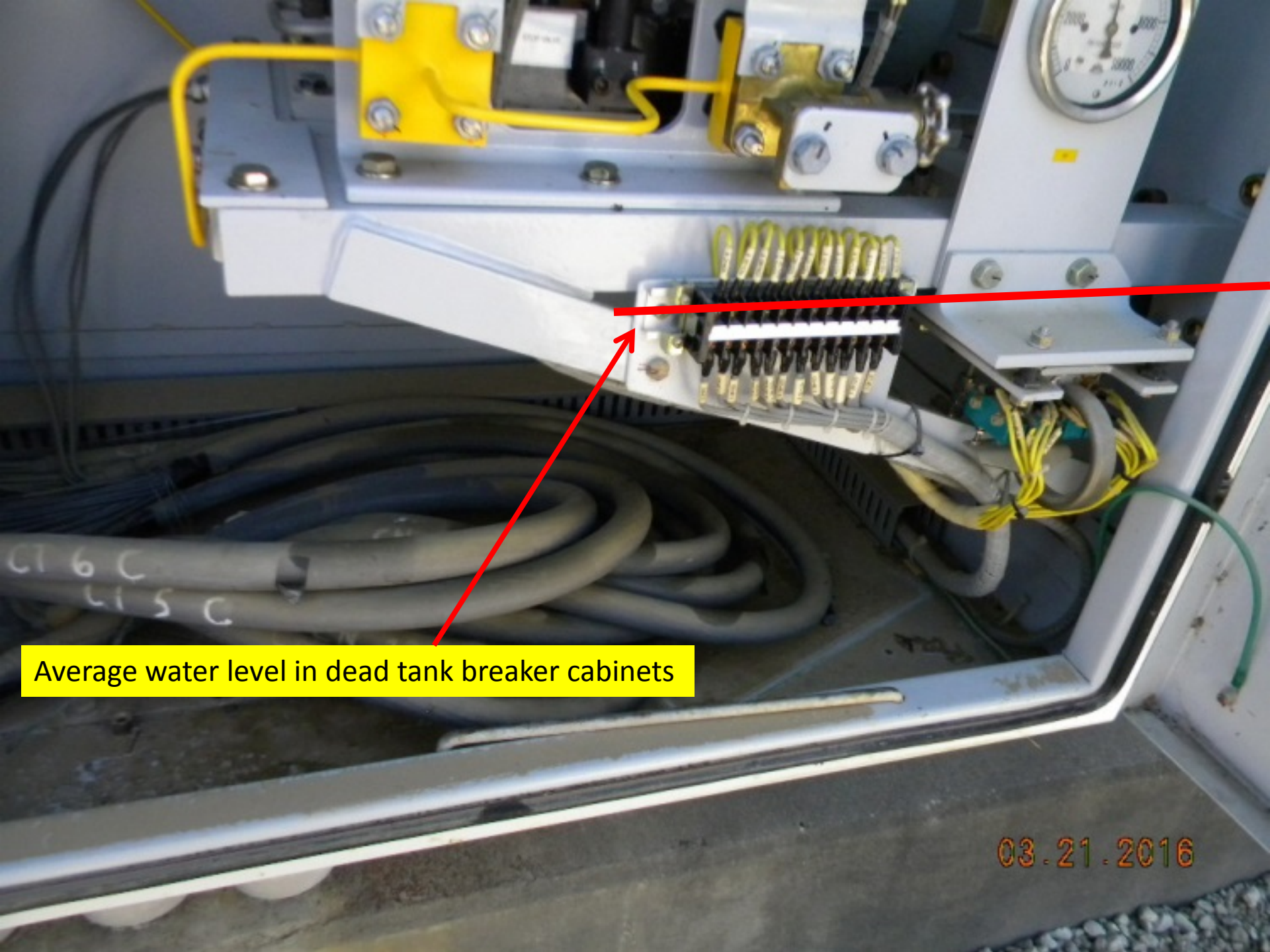
Average water level in dead tank breaker cabinets
03.21.2016

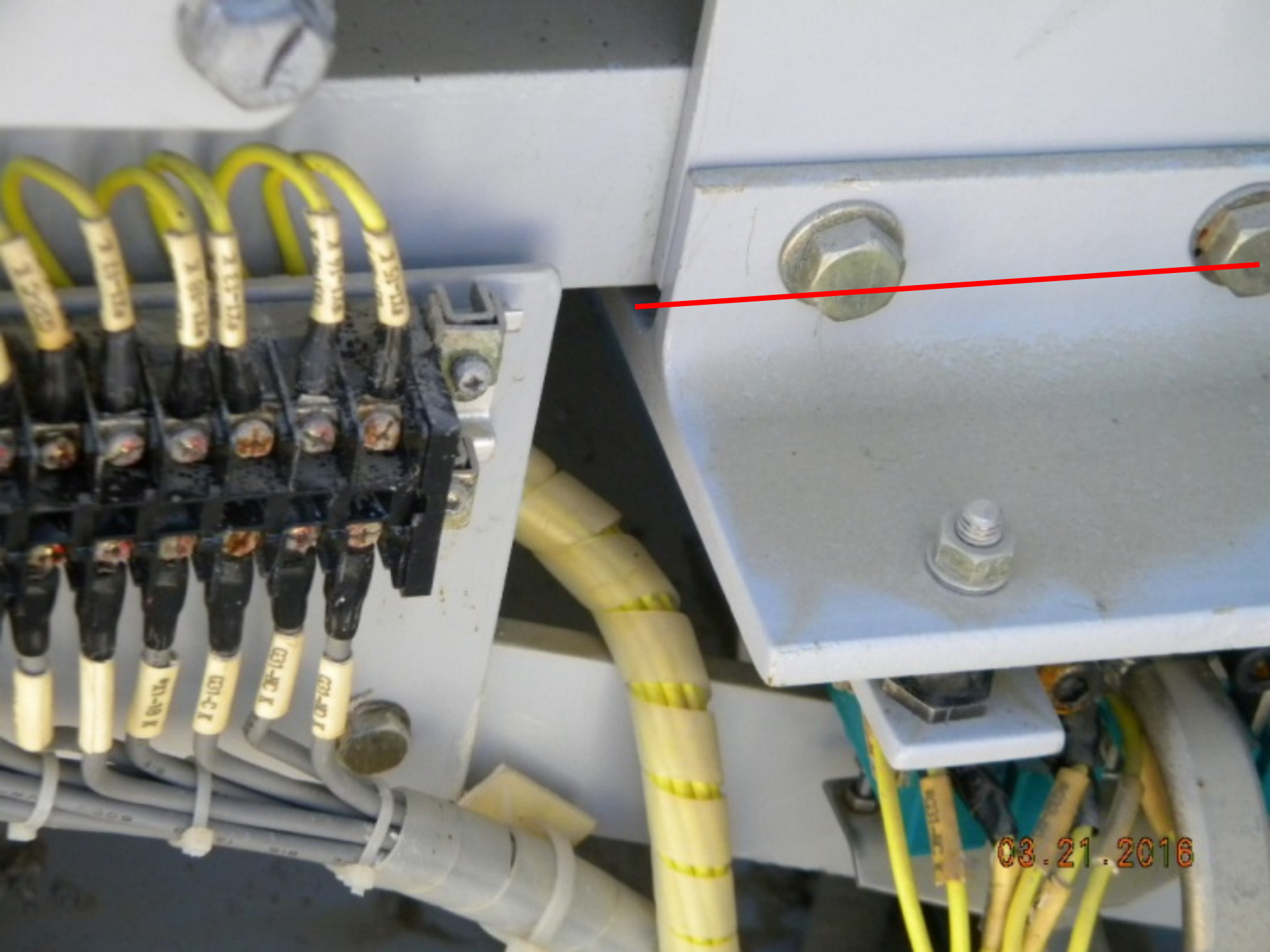
03.21.2016

500kv live tank breaker, no water in the cabinet

03.21.2016

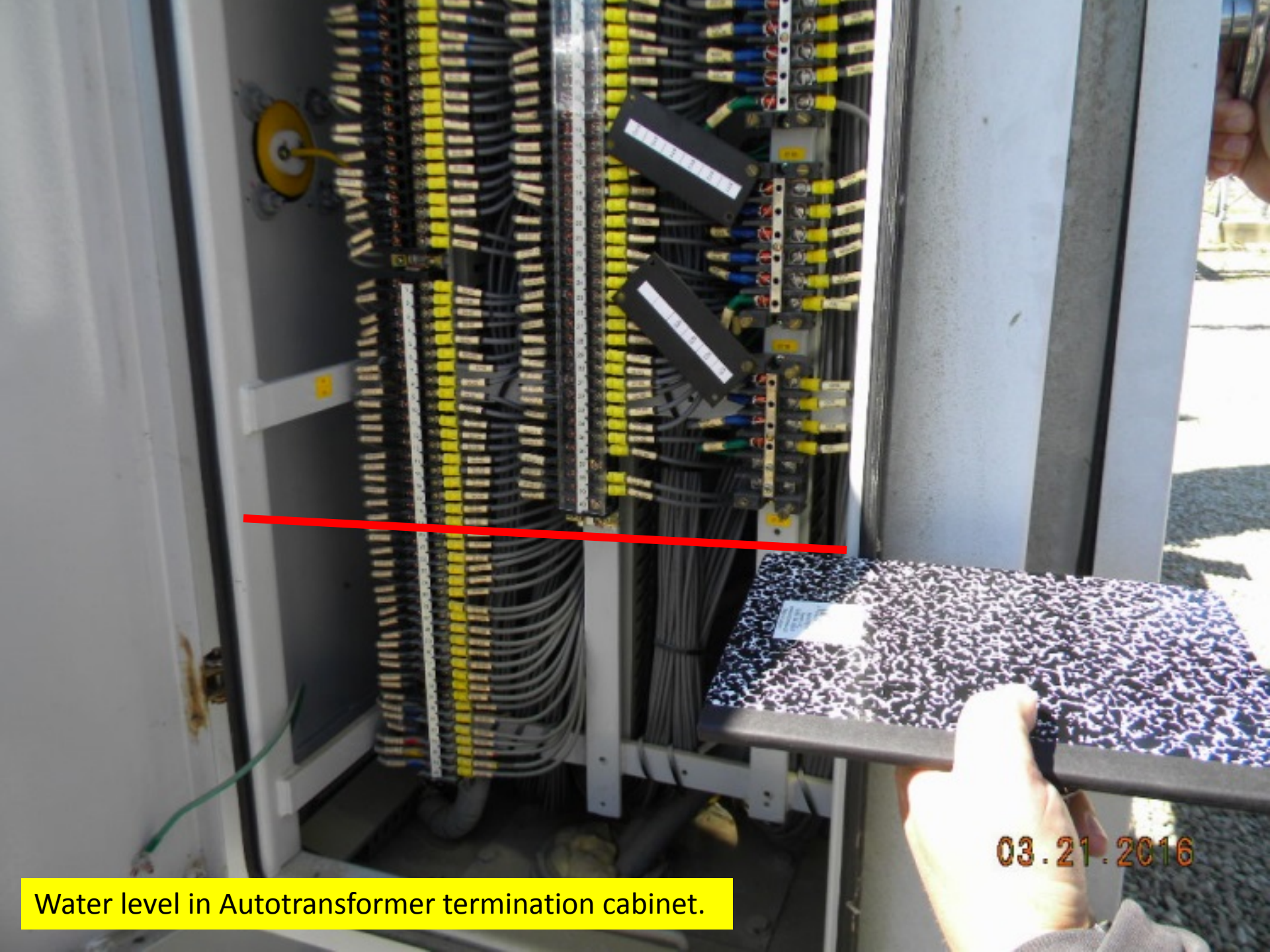

Water level in Autotransformer termination cabinet.

MOS cabinets went under water. Foam applied to prevent leaks didn’t work

25 26 27 28 29 30 31 32
03.21.2016

Emergency Switching

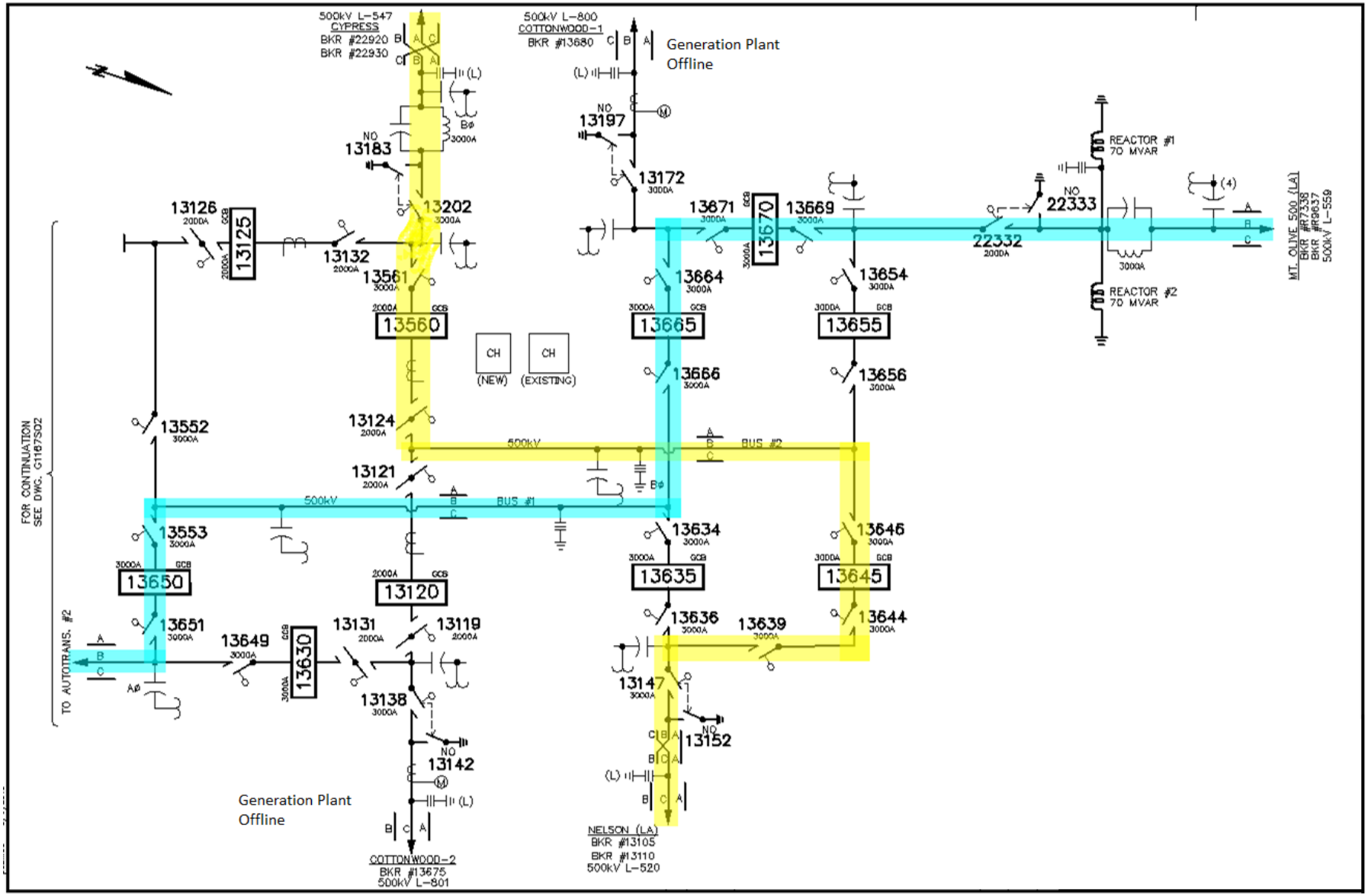

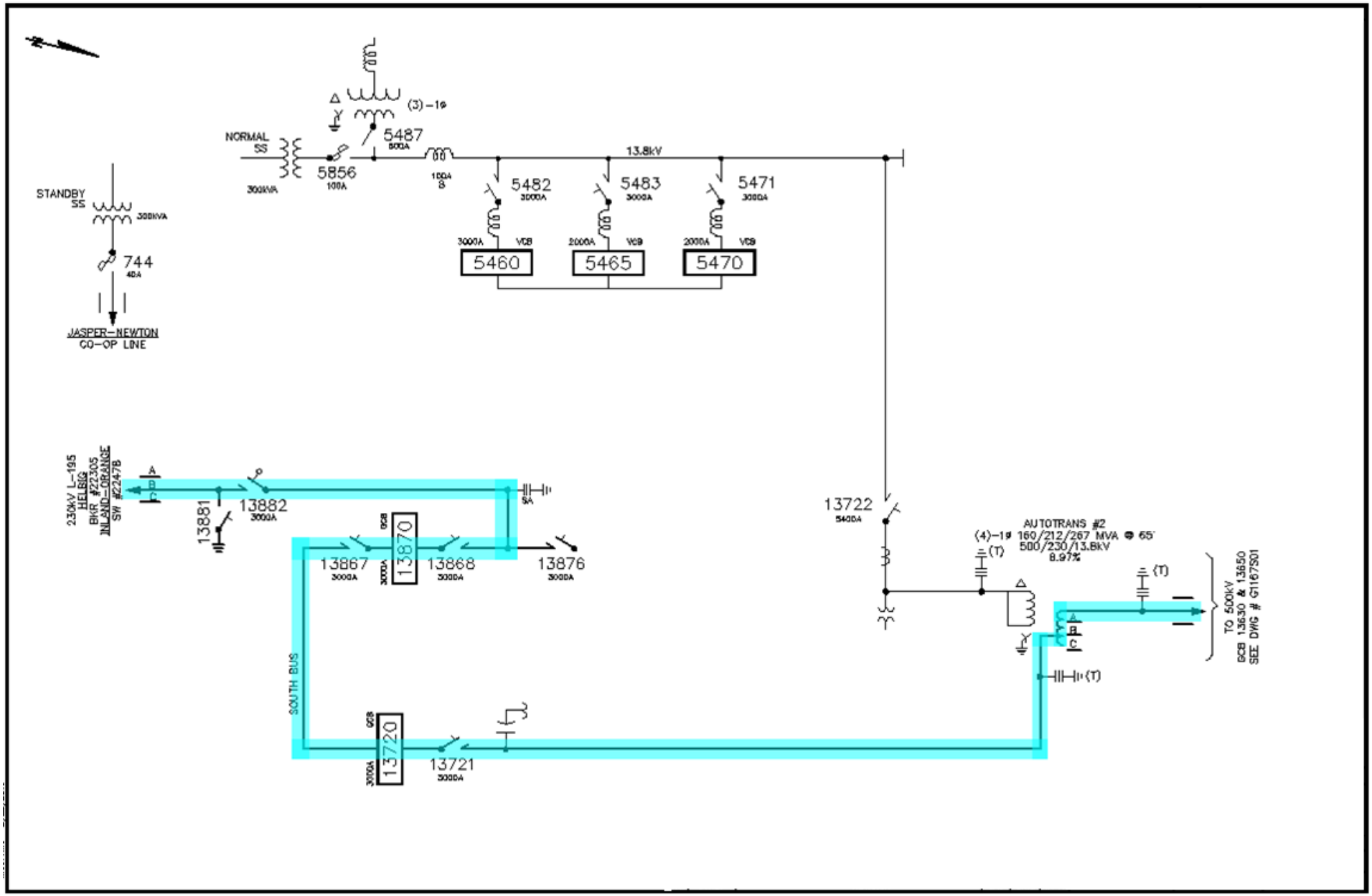
(3)-1φ
NORMAL SS
300kVA
5856
100A
5487
800A
100A
S
13.8kV
5482
3000A
5483
3000A
5471
3000A
3000A VCB
2000A VCB
2000A VCB
5460
5465
5470
STANDBY SS
300kVA
744
40A
JASPER-NEWTON CO-OP LINE
230kV L-195
HELBIG
BKR #22305
INLAND-ORANGE
SW #2247B
A
B
C
13881
13882
3000A
SA
13867
3000A
GCB
3000A
13870
13868
3000A
13876
3000A
SOUTH BUS
GCB
3000A
13720
13721
3000A
13722
5400A
AUTOTRANS #2
(4)-1φ 160/212/267 MVA @ 65°
500/230/13.8kV
8.97%
(T)
(T)
(T)
A
B
C
TO 500kV
GCB 13630 & 13650
SEE DWG # G1167S01

Original Model

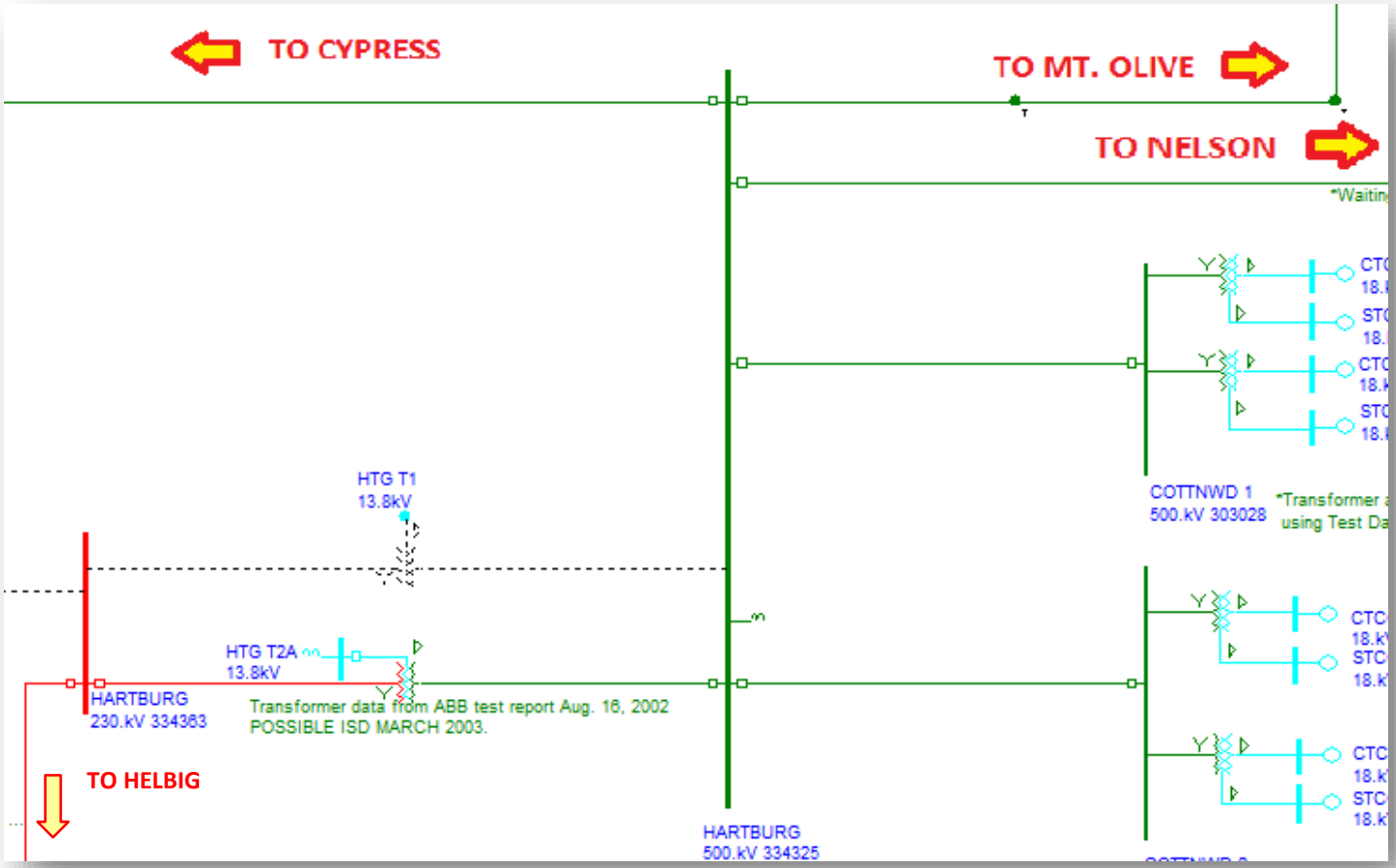

Bypass Model

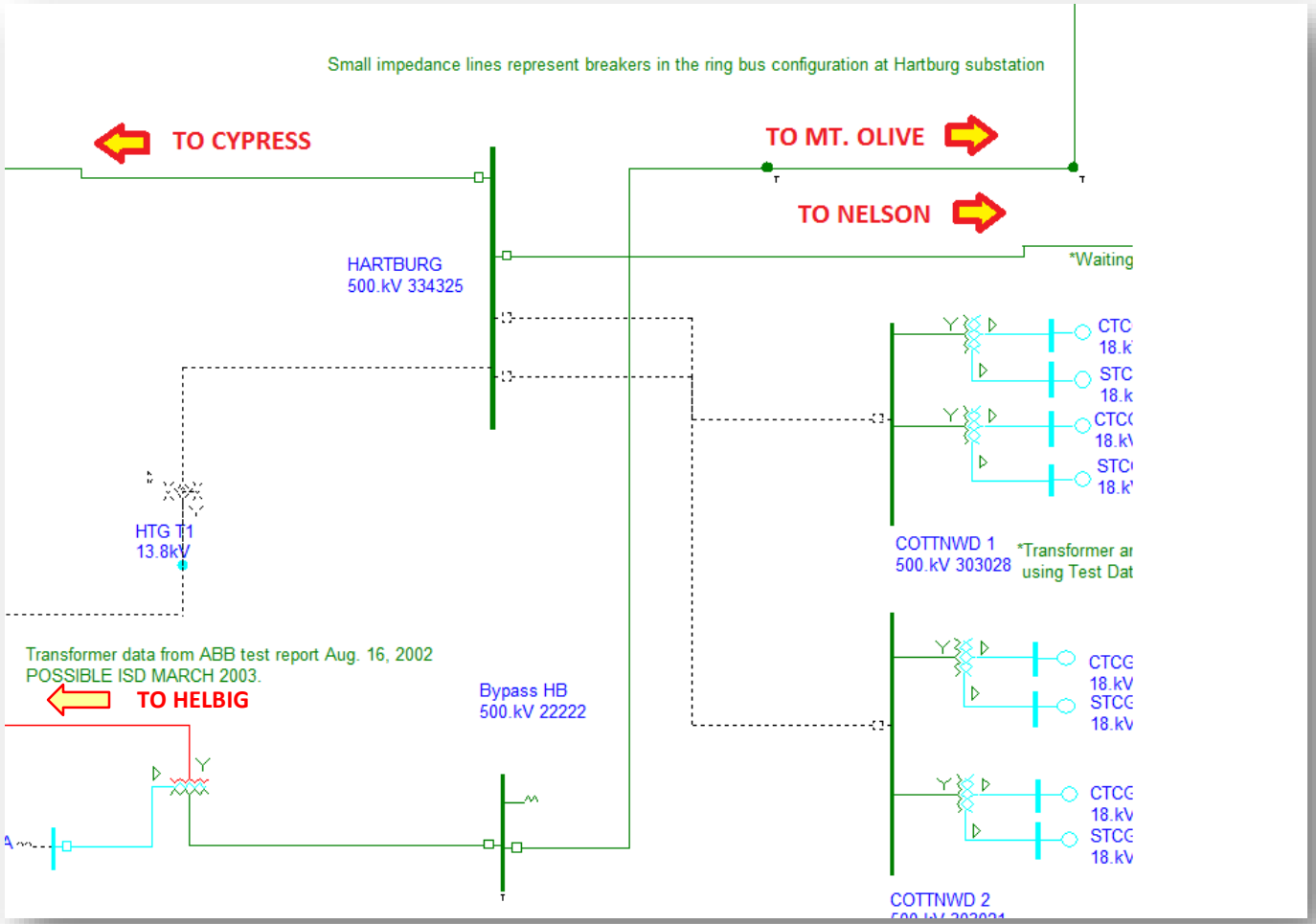

Settings Revisions

Nelson -> Hartburg -> Cypress Bypass

- Increased Zones 1 to protect 80% of both lines
- Increased Zone 2 to protect 120% of both lines
- Decreased Zone 2 timer to 10 cycles
  - Due to stability issues and critical clearing times.
- Used existing tone for pilot protection

Settings Revisions

Mt. Olive -> Hartburg Auto-> Helbig Bypass

- Increased Zone 1 to protect 80% of the line-auto-line configuration.
- Increased Zone 2 to protect 100% of the first line and 50% of the shortest second line
  - Decreased Zone 2 timer to 10 cycles
- Increased Zone 3 to protect:
  - $120\%\left(\boldsymbol{Z}_{\ 1^{st}Line}\right) + \left(\boldsymbol{Z}_{Longest\ 2^{nd}Line} * \boldsymbol{infeed\ ratio}\right)$
- Breaker failure pickups changed

Challenges

- Delta Tertiary of Hartburg Auto XFMR
  - Zero sequence infeed
  - Solution:
    - Used caution when setting ground distance reach elements for both ends
    - Mt. Olive affected enormously and CT ratios had to be changed
  - Unavoidable Risk:
    - Not tripping for a line end fault with Zone 2

Challenges
Mt. Olive – Helbig Line

- Certain point on the transmission line between Helbig and the auto transformer that the relays at Mount Olive would not be able to see a fault until after Helbig trips.
  - Helbig could trip in 5 cycles
  - Mt Olive would trip in 31 cycles (for the above scenario)

Recovery

- Replace and raise all (28) motor operators.
  - **~ 80,000** ft of control cable
- Replace and raise all outdoor distribution panels – Ten DC panels, five AC panels
- Raise station service transformers, generator, and propane tank.

Kentwood Flooding 2016

Kentwood Sub

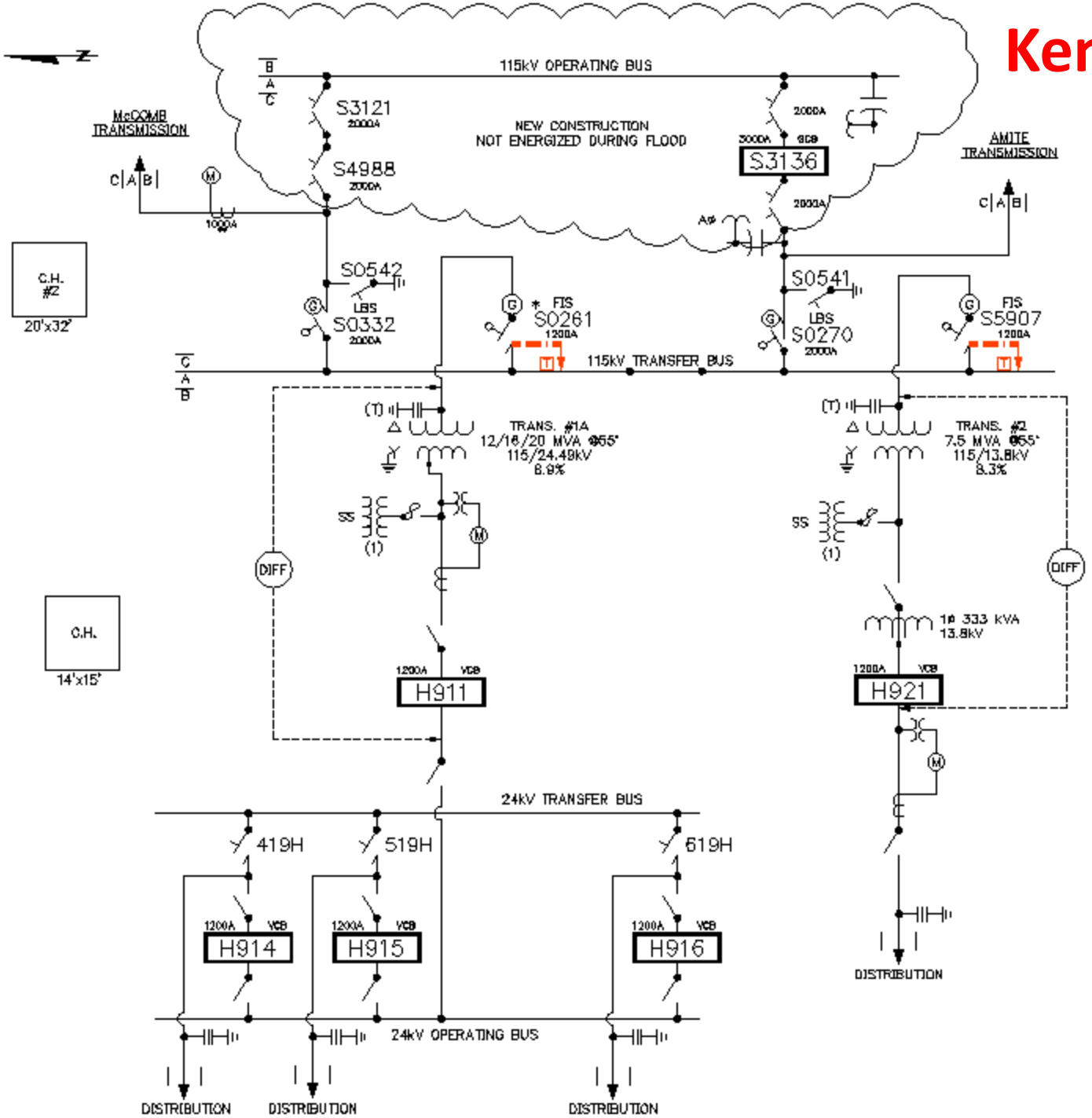

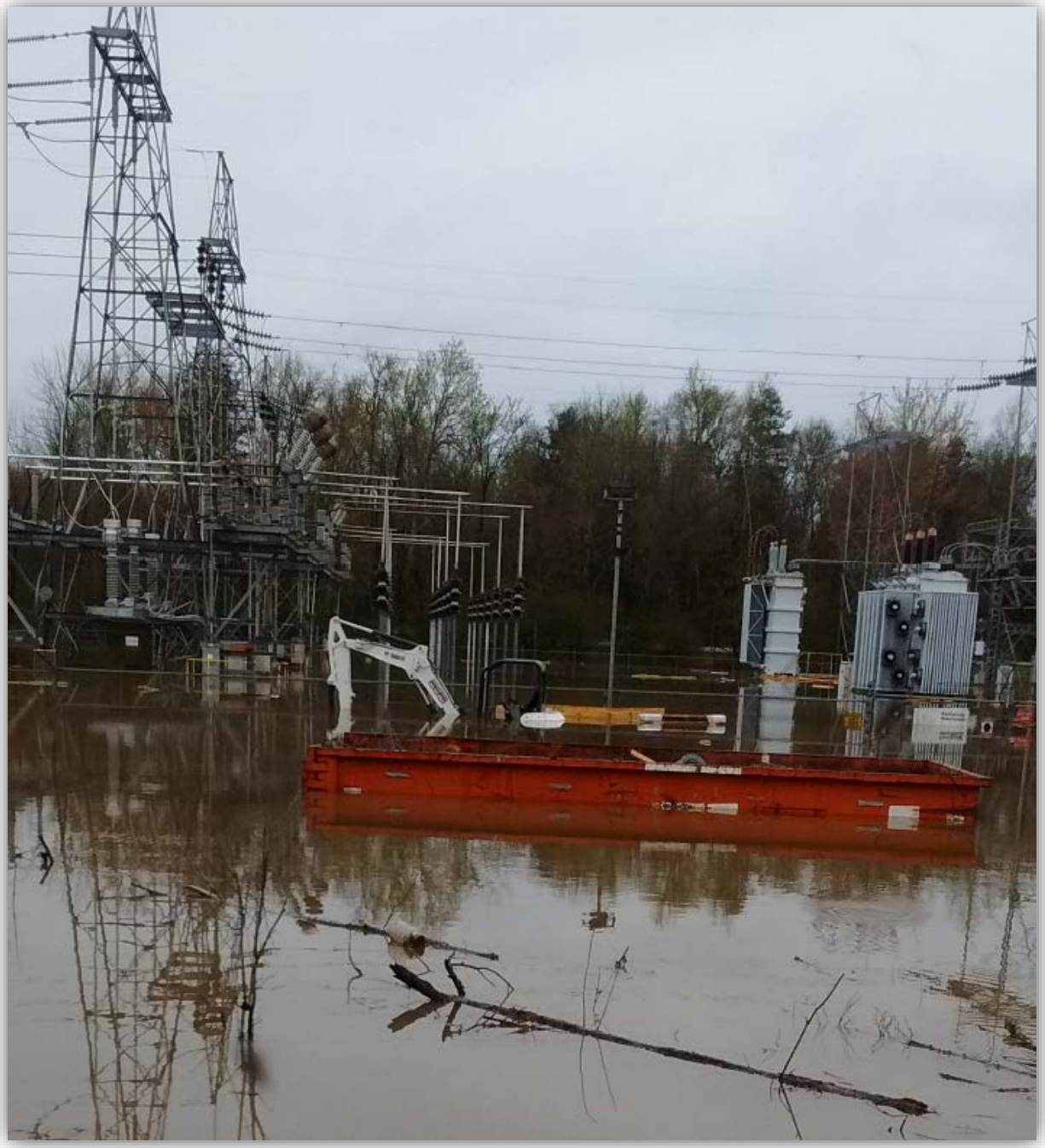

Flood Timeline

KENTWOOD SUB: Located in Flood Zone AE. The lowest point in the station is approximately 7 ½ft below flood level.

FRIDAY, AUGUST 12, 2016:

Torrential rainfall began from a slow-moving low pressure system causing the near by Tangipahoa River to rise above flood stage.

SATURDAY, AUGUST 13, 2016:
Rain continued as the low pressure system began to shift west causing the Tangipahoa River to start subsiding.

SUNDAY, AUGUST 14, 2016:

By Sunday, the water began to recede at the substation.

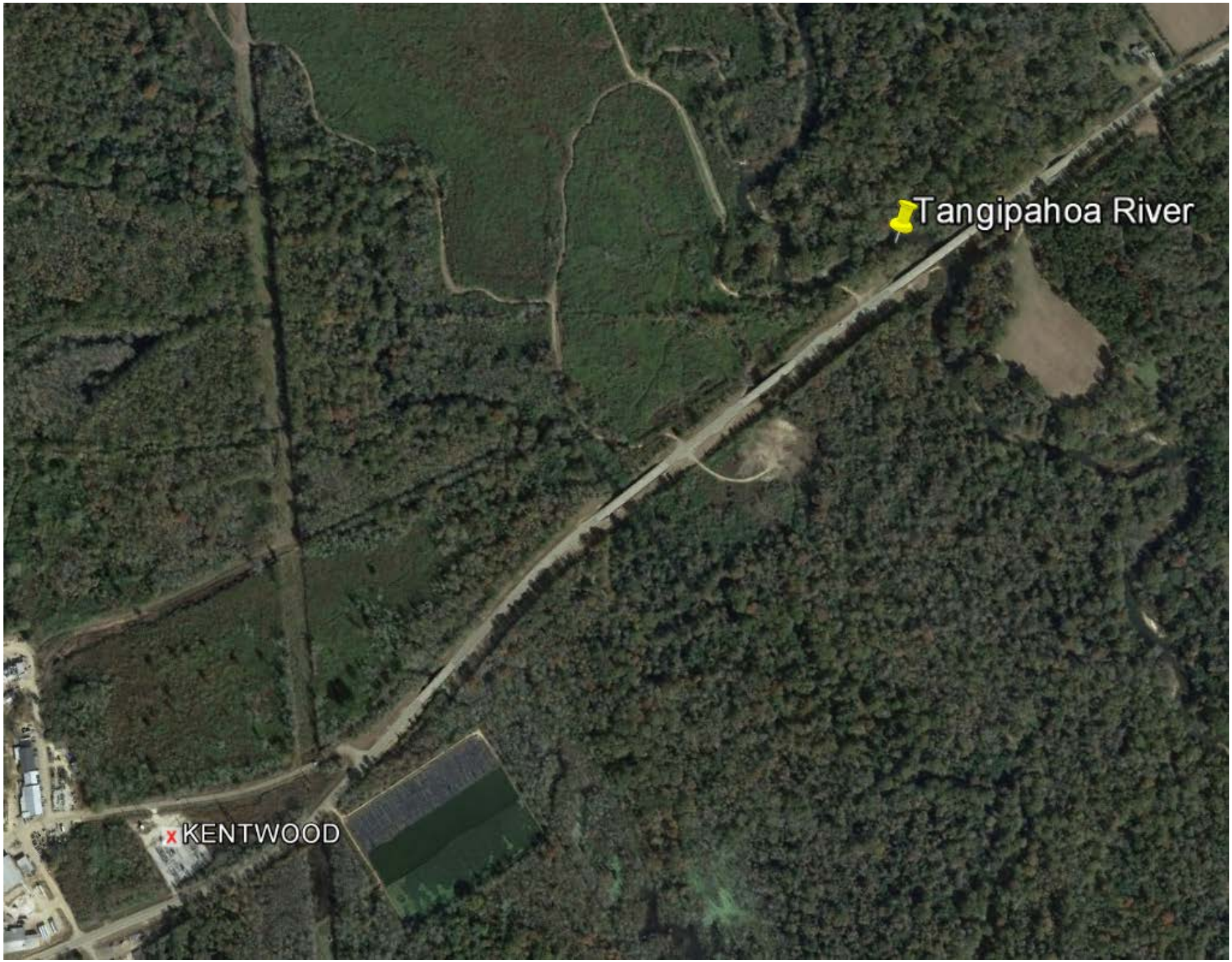
Tangipahoa River
KENTWOOD

CONTROL HOUSES:

As shown in the photograph there was approximately 4 ½ ft of water, reaching the bottom of the control old.

The new control house was on site and installed but did not take on any water. The new control house sits on pillars which are 5ft above grade.

There was no damage to the equipment inside both control houses.

Damaged Low Voltage Breakers:
As shown in the photographs all of the low voltage breakers took on water and needed to be replaced. The breakers were approximately 3ft high during the flooding. No mitigation plan was put into effect prior to the flood.

Resolution for Low Voltage Breakers:

The breakers were raise to 6ft above ground. All new conductors were installed to the new control house. Portions of the overhead bus had to be modified and raised to allow proper clearance for the raised breakers.

Damaged Motor Mechanism Cabinets:

As shown in the photographs the water leaked inside some of the motor mechanism cabinets.

Resolution for Motor Mechanism Cabinets:

Motor mechanism cabinets were replaced and/or raised 2 ½ ft. The bottom of the cabinets were raised to approximately 6 ft to prevent damage for future flooding.

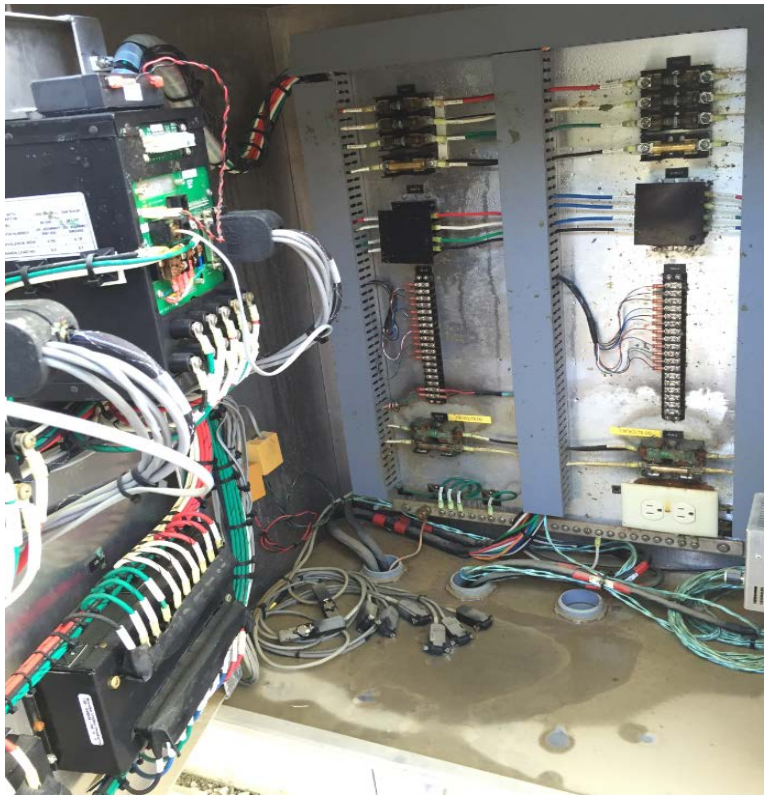

Damaged Outdoor Metering Cabinet:

As shown in the photographs the water got inside the outdoor metering cabinet. Damaging the meters and cables. Water seeped in the cable jackets onto the conductors.

Resolution for Metering Cabinet :

A new metering panel was ordered and relocated inside the new control house. All new meters were purchased and field cables were replaced.

Challenges

- As a result from the flooding, several pieces of outdoor equipment were damaged (junction boxes, station service AC panels, low voltage breakers, motor operator cabinets, XFMR cabinet, metering panel, and large quantity of cable)
- With the station being de-energized, and under construction with the installation of the operating bus and HV breaker, the team faced time constraints finding replacement equipment.
  - To mitigate this equipment was borrowed from other projects and jurisdictions.
    - (2) XFMR Diff Panels slated for another project were modified and used for the Kentwood XFMR Protection Scheme (EMI).
    - (2) Feeder breakers were modified to serve as transformer main beakers.

Challenges (cont'd)

- Utilized the station outage to increase equipment reliability by decommissioning the old control house and moving the SCADA equipment and XFMR protection panels over to the new house.
- Coordination between multiple groups (Telecom IT, Relay Design, Substation Design, Construction, Metering, etc.)
- Time Was The Major Factor
  - The TOC wanted to get McComb to Amite line re-energized incase Amite sub was to overload and/or drop load.

Conclusion

- The team was able to re-energize the station within the allowed outage time frame.
- Outdoor equipment was raised to prevent future damage from future flooding.
- All electromechanical relaying panels were replaced with microprocessor relaying.
- The old control house was decommissioned and all equipment was connected in the new control house.
- Entergy personnel and contractors worked safely and efficiently without any accidents or injuries.

Thank you

Questions?